M0082496-13 (en-us)
November 2020

Operation and Maintenance Manual

336 Excavator

MYX 1-UP (336)
DKS 1-UP (336)
YBN 1-UP (336)
HDF 1-UP (336)
JHD 1-UP (336)
WFF 1-UP (336)

Language: Original Instructions

Important Safety Information

Most accidents that involve product operation, maintenance and repair are caused by failure to observe basic safety rules or precautions. An accident can often be avoided by recognizing potentially hazardous situations before an accident occurs. A person must be alert to potential hazards, including human factors that can affect safety. This person should also have the necessary training, skills and tools to perform these functions properly.

Improper operation, lubrication, maintenance or repair of this product can be dangerous and could result in injury or death.

Do not operate or perform any lubrication, maintenance or repair on this product, until you verify that you are authorized to perform this work, and have read and understood the operation, lubrication, maintenance and repair information.

Safety precautions and warnings are provided in this manual and on the product. If these hazard warnings are not heeded, bodily injury or death could occur to you or to other persons.

The hazards are identified by the “Safety Alert Symbol” and followed by a “Signal Word” such as “DANGER”, “WARNING” or “CAUTION”. The Safety Alert “WARNING” label is shown below.

⚠ WARNING

The meaning of this safety alert symbol is as follows:

Attention! Become Alert! Your Safety is Involved.

The message that appears under the warning explains the hazard and can be either written or pictorially presented.

A non-exhaustive list of operations that may cause product damage are identified by “NOTICE” labels on the product and in this publication.

Caterpillar cannot anticipate every possible circumstance that might involve a potential hazard. The warnings in this publication and on the product are, therefore, not all inclusive. You must not use this product in any manner different from that considered by this manual without first satisfying yourself that you have considered all safety rules and precautions applicable to the operation of the product in the location of use, including site-specific rules and precautions applicable to the worksite. If a tool, procedure, work method or operating technique that is not specifically recommended by Caterpillar is used, you must satisfy yourself that it is safe for you and for others. You should also ensure that you are authorized to perform this work, and that the product will not be damaged or become unsafe by the operation, lubrication, maintenance or repair procedures that you intend to use.

The information, specifications, and illustrations in this publication are on the basis of information that was available at the time that the publication was written. The specifications, torques, pressures, measurements, adjustments, illustrations, and other items can change at any time. These changes can affect the service that is given to the product. Obtain the complete and most current information before you start any job. Cat dealers have the most current information available.

NOTICE

When replacement parts are required for this product Caterpillar recommends using original Caterpillar® replacement parts.

Other parts may not meet certain original equipment specifications.

When replacement parts are installed, the machine owner/user should ensure that the machine remains in compliance with all applicable requirements.

In the United States, the maintenance, replacement, or repair of the emission control devices and systems may be performed by any repair establishment or individual of the owner's choosing.

Table of Contents

Foreword 5

Safety Section

Safety Messages 7

Additional Messages 19

General Hazard Information 26

Crushing Prevention and Cutting Prevention .. 29

Burn Prevention 29

Fire Prevention and Explosion Prevention 30

Fire Safety 34

Fire Extinguisher Location 34

Track Information 34

High Pressure Fuel Lines 35

Electrical Storm Injury Prevention 35

Before Starting Engine 35

Visibility Information 36

Restricted Visibility 36

Engine Starting 39

Before Operation 39

Work Tools 39

Assist and E-Fence 40

Operation 41

Engine Stopping 44

Lifting Objects 44

Demolition 44

Parking 45

Slope Operation 45

Equipment Lowering with Engine Stopped 46

Sound Information and Vibration Information . 46

Operator Station 49

Guards (Operator Protection) 49

Product Information Section

General Information 51

Identification Information 205

Operation Section

Before Operation 211

Machine Operation 214

Engine Starting 302

Operation 306

Operating Techniques 311

Parking 344

Transportation Information 347

Towing Information 356

Engine Starting (Alternate Methods) 359

Maintenance Section

Maintenance Access 362

Lubricant Viscosities and Refill Capacities ... 365

Maintenance Support 375

Maintenance Interval Schedule 383

Warranty Section

Warranty Information 458

Reference Information Section

Reference Materials 459

Index Section

Index 460

Foreword

California Proposition 65 Warning

Diesel engine exhaust and some of its constituents are known to the State of California to cause cancer, birth defects, and other reproductive harm.

WARNING – This product can expose you to chemicals including ethylene glycol, which is known to the State of California to cause birth defects or other reproductive harm. For more information go to:

www.P65Warnings.ca.gov

Do not ingest this chemical. Wash hands after handling to avoid incidental ingestion.

WARNING – This product can expose you to chemicals including lead and lead compounds, which are known to the State of California to cause cancer, birth defects, or other reproductive harm. For more information go to:

www.P65Warnings.ca.gov

Wash hands after handling components that may contain lead.

Literature Information

This manual should be stored in the operator's compartment in the literature holder or seat back literature storage area.

This manual contains safety information, operation instructions, transportation information, lubrication information, and maintenance information.

Some photographs or illustrations in this publication show details or attachments that can be different from your machine. Guards and covers might have been removed for illustrative purposes.

Continuing improvement and advancement of product design might have caused changes to your machine which are not included in this publication. Read, study, and keep this manual with the machine.

Whenever a question arises regarding your machine, or this publication, please consult your Cat dealer for the latest available information.

Safety

The safety section lists basic safety precautions. In addition, this section identifies the text and locations of warning signs and labels used on the machine.

Read and understand the basic precautions listed in the safety section before operating or performing lubrication, maintenance, and repair on this machine.

Operation

The operation section is a reference for the new operator and a refresher for the experienced operator. This section includes a discussion of gauges, switches, machine controls, attachment controls, transportation, and towing information.

Photographs and illustrations guide the operator through correct procedures of checking, starting, operating, and stopping the machine.

Operating techniques outlined in this publication are basic. Skill and techniques develop as the operator gains knowledge of the machine and its capabilities.

Maintenance

The maintenance section is a guide to equipment care. The Maintenance Interval Schedule (MIS) lists the items to be maintained at a specific service interval. Items without specific intervals are listed under the "When Required" service interval. The Maintenance Interval Schedule lists the page number for the step-by-step instructions required to accomplish the scheduled maintenance. Use the Maintenance Interval Schedule as an index or "one safe source" for all maintenance procedures.

Maintenance Intervals

Use the service hour meter to determine servicing intervals. Calendar intervals shown (daily, weekly, monthly, etc.) can be used instead of service hour meter intervals if the calendar intervals provide more convenient servicing schedules and approximate the indicated service hour meter reading. Perform the recommended service at the interval that occurs first.

Under severe, dusty, or wet operating conditions, more frequent lubrication than is specified in the maintenance intervals chart might be necessary.

Perform service on items at multiples of the original requirement. For example, at every 500 service hours or 3 months, also service those items listed under every 250 service hours or monthly and every 10 service hours or daily.

Certified Engine Maintenance

Proper maintenance and repair are essential to keep the engine and machine systems operating correctly. As the heavy-duty off-road diesel engine owner, you are responsible for the performance of the required maintenance listed in the Owner Manual, Operation and Maintenance Manual, and Service Manual.

It is prohibited for any person engaged in the business of repairing, servicing, selling, leasing, or trading engines or machines to remove, alter, or to render inoperative, any emission-related device or element of design installed on or in an engine or machine that is in compliance with all applicable regulations of the intended country to which it has been shipped. Certain elements of the machine and engine such as the exhaust system, fuel system, electrical system, intake air system, and cooling system may be emission-related and should not be altered unless approved by Caterpillar.

Machine Capacity

Additional attachments or modifications may exceed machine design capacity which can adversely affect performance characteristics. Included would be stability and system certifications such as brakes, steering, and rollover protective structures (ROPS). Contact your Cat dealer for further information.

Product Identification Number

Effective First Quarter 2001 the Product Identification Number (PIN) has changed from 8 to 17 characters. To provide uniform equipment identification, construction equipment manufacturers are moving to comply with the latest version of the product identification numbering standard. Non-road machine PINs are defined by ISO 10261. The new PIN format will apply to all machines and generator sets. The PIN plates and frame marking will display the 17 character PIN. The new format will look like the following:

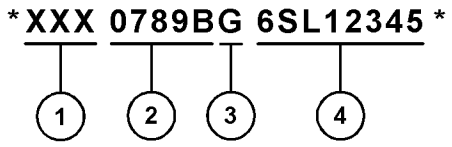

Illustration 1 g03891925

Where:

1. World Manufacturing Code (characters 1-3)

2. Machine Descriptor (characters 4-8)

3. Check Character (character 9)

4. Machine Indicator Section (MIS) or Product Sequence Number (characters 10-17). These were previously referred to as the Serial Number.

Machines and generator sets produced before First Quarter 2001 will maintain their 8 character PIN format.

Components such as engines, transmissions, axles, and work tools will continue to use an 8 character Serial Number (S/N).

Safety Section

i08071127

Safety Messages

SMCS Code: 7000; 7405

There are several specific safety messages on this machine. The exact location of the hazards and the description of the hazards are reviewed in this section. Become familiarized with all safety messages.

Make sure that all the safety messages are legible. Clean the safety messages or replace the safety messages if you cannot read the words. Replace the illustrations if the illustrations are not visible. When you clean the safety messages, use a cloth, water, and soap. Do not use solvent, gasoline, or other harsh chemicals to clean the safety messages. Solvents, gasoline, or harsh chemicals could loosen the adhesive that secures the safety message. Loose adhesive will allow the safety message to fall.

Replace any safety message that is damaged, or missing. If a safety message is attached to a part that is replaced, install a safety message on the replacement part. Any Cat dealer can provide new safety messages.

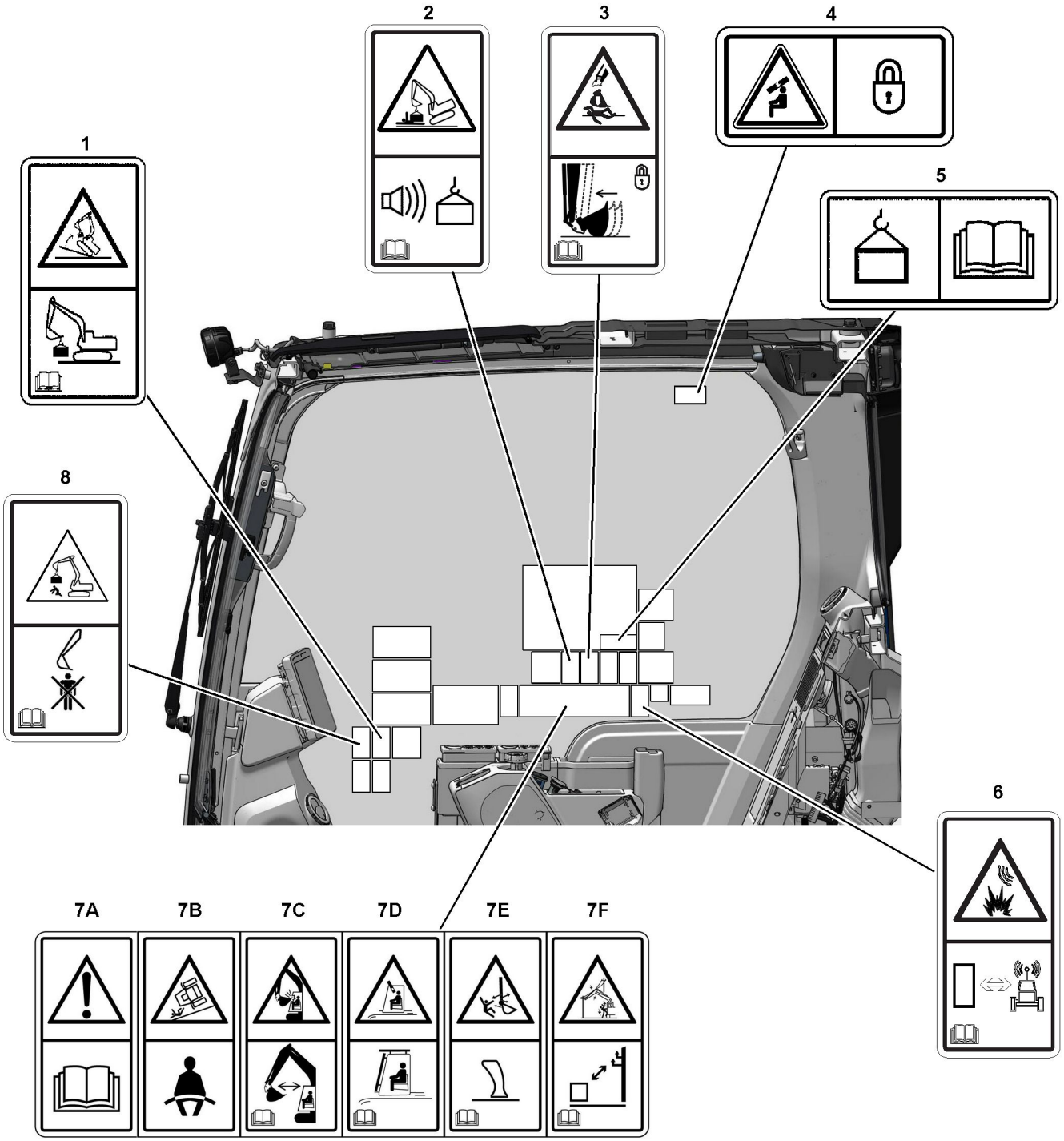

Illustration 2 g06532979

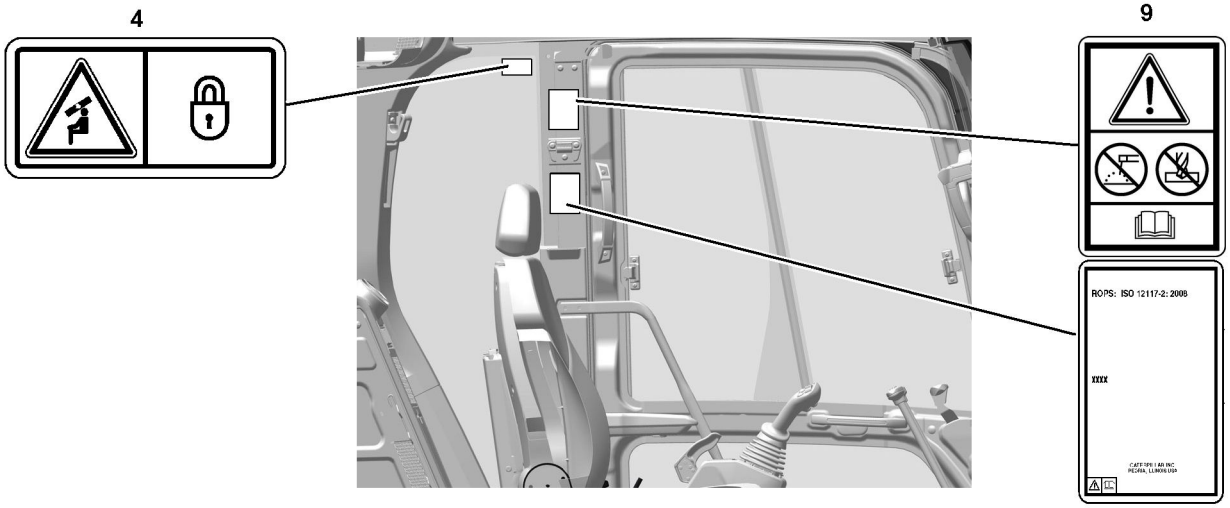

Illustration 3 g06353340

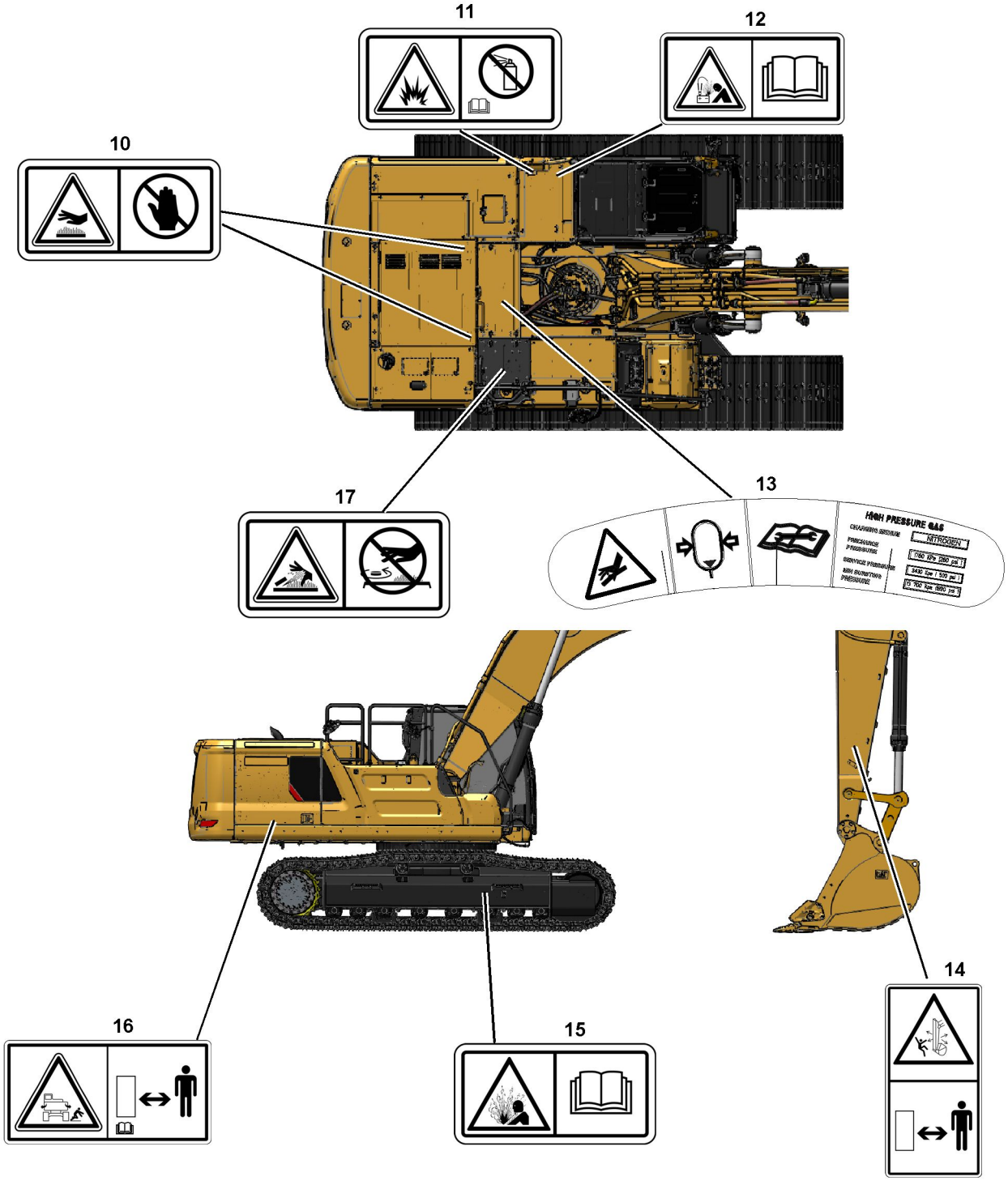

Illustration 4 g06353351

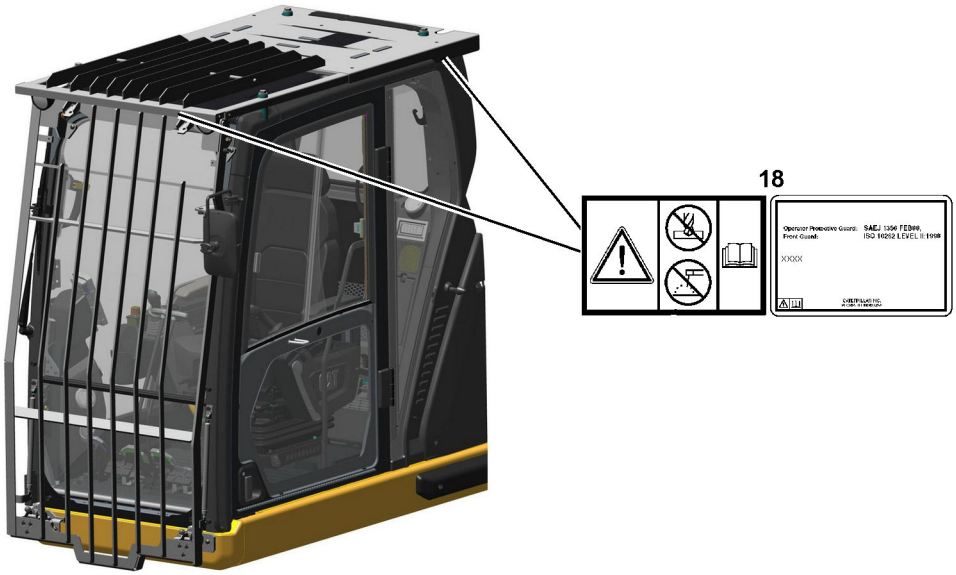

Illustration 5 g06353353

Lifting Level Warning (1)

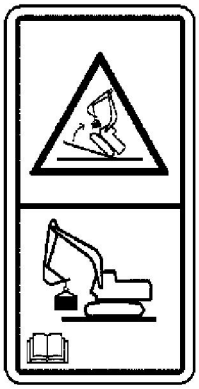

Illustration 6 g06289488

Overload Warning Device (2)

If equipped, this safety message is located in the cab on the right side window.

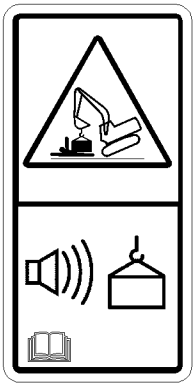

Illustration 7 g06224998

WARNING

Overloading the machine could impact the machine's stability which could result in a tipover hazard. A tipover hazard could result in serious injury or death. Always activate the overload warning device before you handle or lift objects.

Refer to Operation and Maintenance Manual, “Operator Controls” for further information.

Crushing Injury (3)

If equipped, this safety message is located in the cab on the right side window.

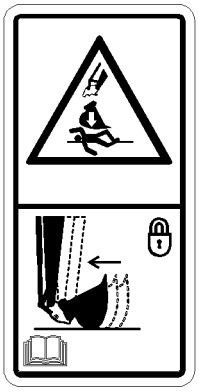

Illustration 8 g06188540

WARNING

Crush injury. Could cause serious injury or death. Always confirm that the quick coupler is engaged onto the pins. Read the Operator's Manual.

Refer to Operation and Maintenance Manual, “Quick Coupler Operation” for further information.

Crushing Hazard (4)

These safety messages are on the left and right side cab windows.

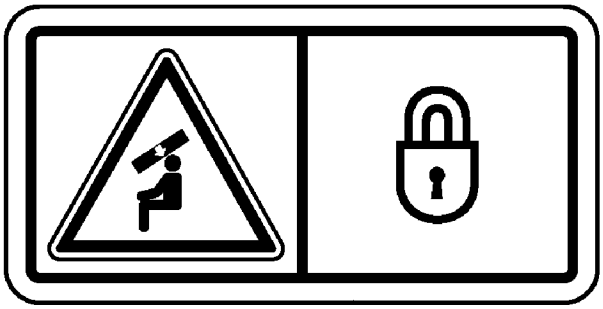

Illustration 9 g02061339

WARNING

Personal injury can result if the window is not latched in the overhead position; ensure the auto lock is engaged.

Refer to Operation and Maintenance Manual, “Window (Front)” for further information.

Lifting Notice (5)

If equipped, this safety message is located in the cab on the right side window.

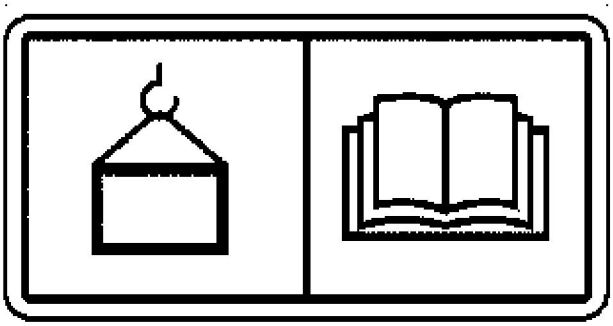

Illustration 10 g06289554

WARNING

When operating the machine's lift tool, read Operation and Maintenance Manual first for lifting capabilities.

Product Link (6)

If equipped, this safety message is located in the cab on the right side window.

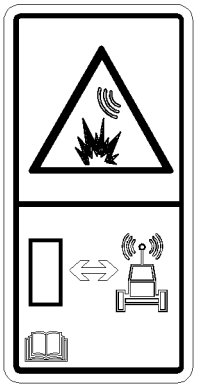

Illustration 11 g06188657

WARNING

This machine is equipped with a Caterpillar Product Link communication device. When electric detonators are used, this communication device should be deactivated within 12 m (40 ft) of a blast site for satellite-based systems and within 3 m (10 ft) of a blast site for cellular based systems, or within the distance mandated under applicable legal requirements. Failure to do so could cause interference with blasting operations and result in serious injury or death.

In cases where the type of Product Link module cannot be identified, Caterpillar recommends that the device be disabled no less than 12 m (40 ft) from the blast perimeter.

Refer to Operation and Maintenance Manual, “Product Link” for further information.

Do Not Operate (7A)

This safety message is located in the cab on the right side window.

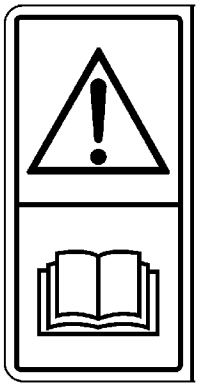

Illustration 12 g06188661

WARNING

Do not operate or work on this machine unless you have read and understand the instructions and warnings in the Operation and Maintenance Manual. Failure to follow the instructions or heed the warnings could result in injury or death. Contact any Caterpillar dealer for replacement manuals. Proper care is your responsibility.

Seat Belt (7B)

This safety message is located in the cab on the right side window.

Illustration 13 g06188642

WARNING

A seat belt should be worn at all times during machine operation to prevent serious injury or death in the event of an accident or machine overturn. Failure to wear a seat belt during machine operation may result in serious injury or death.

Crushing Hazard (7C)

This safety message is located in the cab on the right side window.

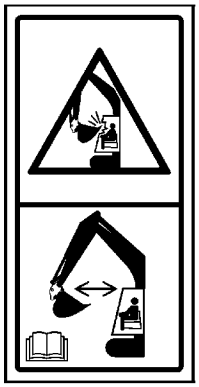

Illustration 14 g06188644

WARNING

Crushing Hazard! Certain machine front linkage combinations (boom, stick, quick coupler, work tool) may require keeping the work tool away from the cab during operation. Personal injury or death may result if the work tool contacts the cab during operation.

Crushing Hazard (7D)

This safety message is located in the cab on the right side window.

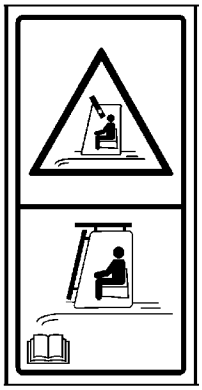

Illustration 15 g06188652

WARNING

The impact from objects that strike the front of the cab or the top of the cab could result in a crushing hazard with the potential for personal injury or death.

The front guard and the top guard should be installed on the cab for applications where the hazard of falling objects exist. Read the Operation and Maintenance Manual.

Refer to Operation and Maintenance Manual, “Guards” for further information.

Joystick Controls Alternate Patterns (7E)

If equipped, this safety message is located in the cab on the right side window.

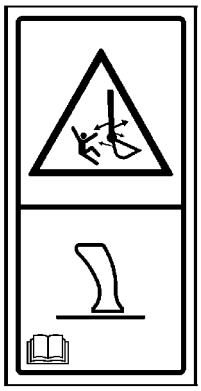

Illustration 16 g06188665

WARNING

Crush Hazard. Improper joystick setting could cause possible unexpected movement of the boom, stick, or worktool which could result in serious injury or death. Confirm that the joystick settings are properly configured before you operate the machine. Read the Operation and Maintenance Manual.

Refer to Operation and Maintenance Manual, “Joystick Controls Alternate Patterns” for further information.

Electrical Power Lines (7F)

This safety message is located in the cab.

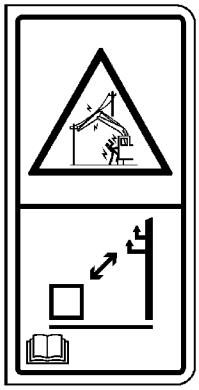

Illustration 17 g06188667

DANGER

Electrocution Hazard! Keep the machine and attachments a safe distance from electrical power. Stay clear 3 m (10 ft) plus twice the line insulator length. Read and understand the instructions and warnings in the Operation and Maintenance Manual. Failure to follow the instructions and warnings will cause serious injury or death

Refer to Operation and Maintenance Manual, “Specifications” for further information.

Do Not Lift Over Personnel (8)

This safety message is located in the cab on the right side window.

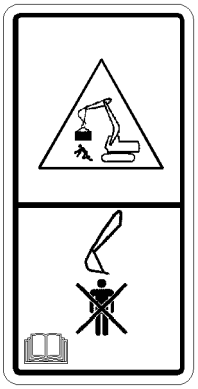

Illustration 18 g06188697

Do not lift

Do Not Weld or Drill on ROPS (9)

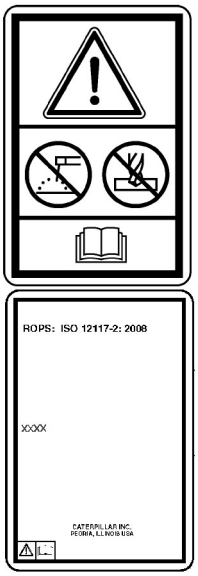

Illustration 19 g06207749

If equipped, this safety message is on the left side pillar in the cab.

WARNING

Structural damage, an overturn, modification, alteration, or improper repair, can impair this structure's protective capability thereby voiding this certification. Do not weld on or drill holes in the structure. Consult a Caterpillar dealer to determine this structure's limitations without voiding its certification.

This machine has been certified to the standards that are listed on the certification plate. The maximum mass of the machine, which includes the operator and the attachments without a payload, should not exceed the mass on the certification plate.

Refer to Operation and Maintenance Manual, “Guards (Operator Protection)” for more information.

Hot Surface (10)

This message is on the outside of the engine hood and on the inside the engine hood.

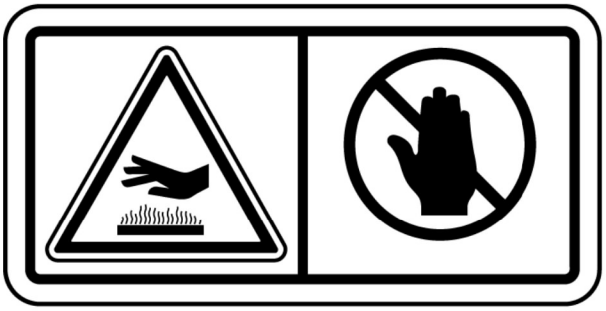

Illustration 20 g01372256

WARNING

Engine hood and engine hood parts can be hot while engine is running or immediately after engine shutdown. Hot parts or hot components can cause burns or personal injury. Do not allow these parts to contact your skin, when engine is running or immediately after engine shutdown. Use protective clothing or protective equipment to protect your skin.

Aerosol Starting Aid (11)

This safety message is located near the precleaner. The following information is not applicable to machines that are equipped with an ether starting aid.

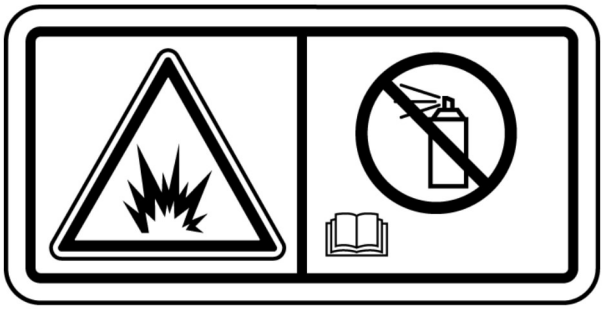

Illustration 21 g01372254

WARNING

Explosion hazard! Do not use ether! This machine is equipped with an air inlet heater. Using ether can create explosions or fires that can cause personal injury or death. Read and follow the starting procedure in the Operation and Maintenance Manual.

Refer to Operation and Maintenance Manual, “Engine Starting” for the proper starting procedure.

Jump-Start Cables (12)

This safety message is positioned on the circuit breaker panel.

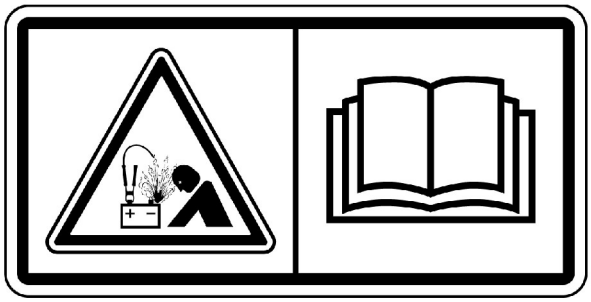

Illustration 22 g01370909

WARNING

Explosion Hazard! Improper jumper cable connections can cause an explosion resulting in serious injury or death. Batteries may be located in separate compartments. Refer to the Operation and Maintenance Manual for the correct jump starting procedure.

Refer to Operation and Maintenance Manual, “Engine Starting with Jump-Start Cables” for further information.

High-Pressure Gas (13)

This safety message is positioned on the accumulator.

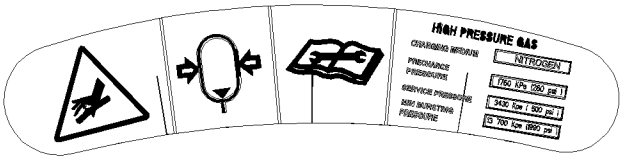

Illustration 23 g06188756

WARNING

Pressurized System!

Hydraulic accumulators contain gas and oil under high pressure. DO NOT disconnect lines or disassemble any component of a pressurized accumulator. All gas pre-charge must be removed from the accumulator as instructed by the service manual before servicing or disposing of the accumulator or any accumulator component.

Failure to follow the instructions and warnings could result in personal injury or death.

Only use dry nitrogen gas to recharge accumulators. See your Cat dealer for special equipment and detailed information for accumulator service and charging.

Refer to Operation and Maintenance Manual, “Equipment Lowering with Engine Stopped” for further information.

Crushing Hazard (14)

This safety message is on both sides of the stick.

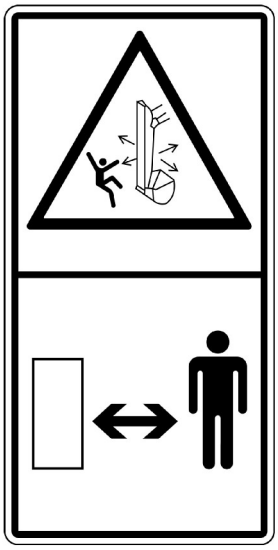

Illustration 24 g01385579

WARNING

A crushing hazard exists when the stick and boom are in motion and when the machine is being used in object handling applications. Failure to stay clear of the stick and boom when the machine is in operation can result in personal injury or death. Stay clear of the stick and boom when the machine is in operation.

Vapor Explosion (15)

If equipped, this safety message is on the storage compartment for the fuel transfer pump.

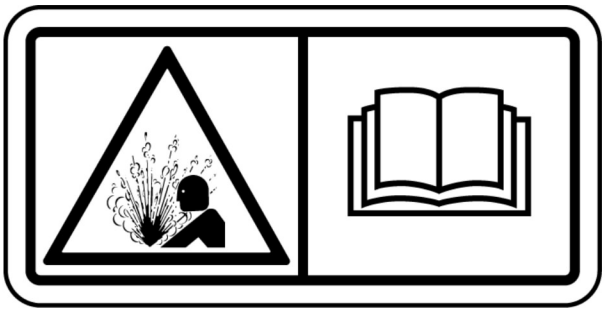

Illustration 25 g01407639

WARNING

Explosion hazard! Fuel vapors can accumulate in the refueling pump compartment and can be ignited by improper operation of the refueling pump. Failure to follow the operating instructions for the refueling pump could result in personal injury or death. Read and follow the operating instructions for the refueling pump in the Operation and Maintenance Manual.

Refer to Operation and Maintenance Manual, “Fuel Transfer Pump (Refueling)” for further information.

Crushing Hazard (16)

This safety message is on the rear of each side of the machine.

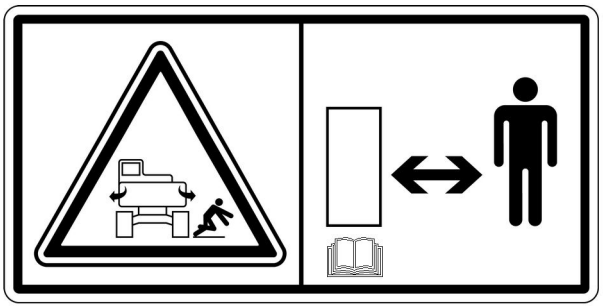

Illustration 26 g06219420

WARNING

Machine swings. Stay back. Crushing hazard could cause serious injury or death.

Relieve Hydraulic Tank Pressure (17)

This safety message is on top of the hydraulic tank.

Illustration 27 g01371640

WARNING

Hot Fluid Under Pressure!

Do NOT remove pressure cap when hot. Hot oil could cause serious injury or death.

Falling Object Guard Structure (18)

If equipped, this safety message is on top of the front falling object guard structure. This safety message is also on the left side of the falling object guard structure on the top of the cab.

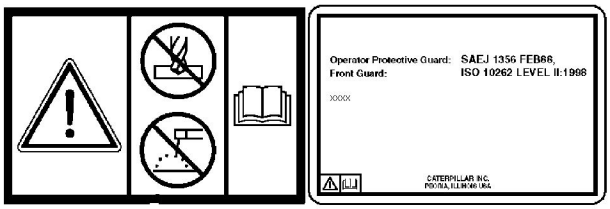

Illustration 28 g06289969

WARNING

Structural damage, an overturn, modification, alteration, or improper repair can impair this structure's protection capability thereby voiding this certification. Do not weld on or drill holes in the structure. Consult a Caterpillar dealer to determine this structure's limitations without voiding its certification.

i07415922

Additional Messages

SMCS Code: 7000; 7405

There are several specific messages on this machine. The exact location of the messages and the description of the information are reviewed in this section. Become familiar with all messages.

Make sure that all the messages are legible. Clean the messages or replace the messages if you cannot read the words. Replace the illustrations if the illustrations are not legible. When you clean the messages, use a cloth, water, and soap. Do not use solvent, gasoline, or other harsh chemicals to clean the messages. Solvents, gasoline, or harsh chemicals could loosen the adhesive that secures the messages. Loose adhesive will allow the messages to fall.

Replace any message that is damaged, or missing. If a message is attached to a part that is replaced, install a message on the replacement part. Any Cat dealer can provide new messages.

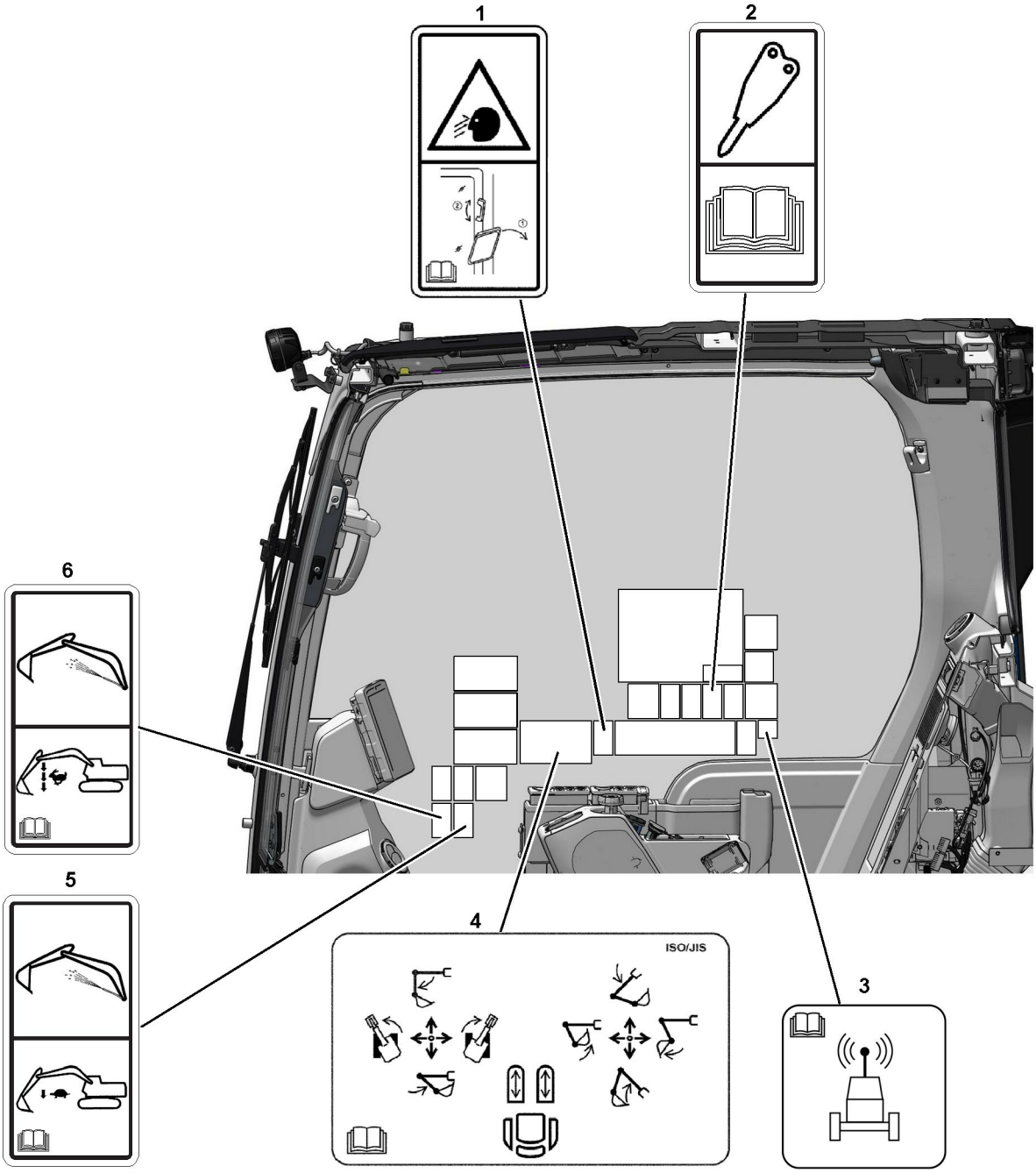

Illustration 29 g06187617

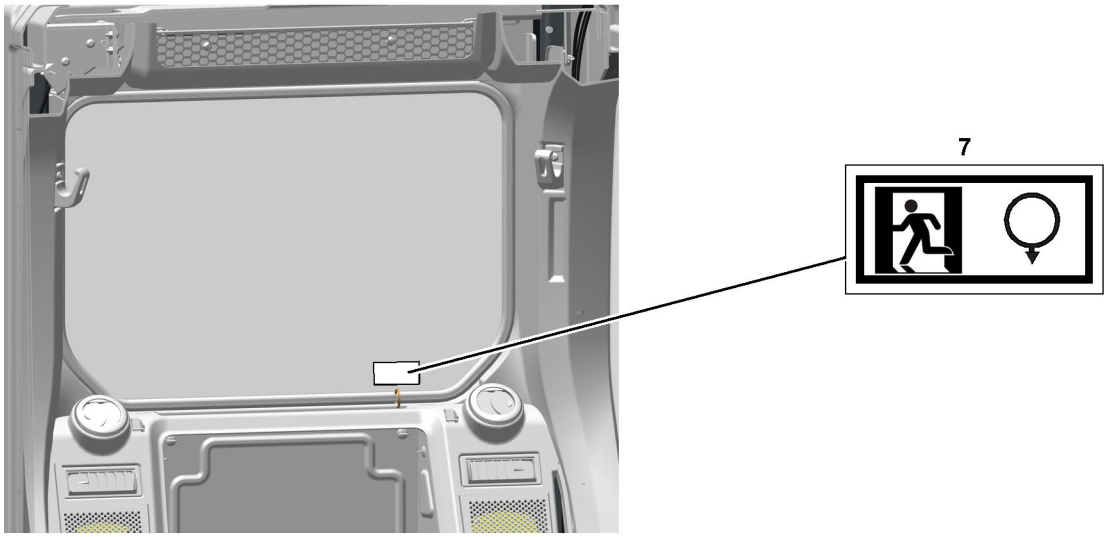

Illustration 30 g06189121

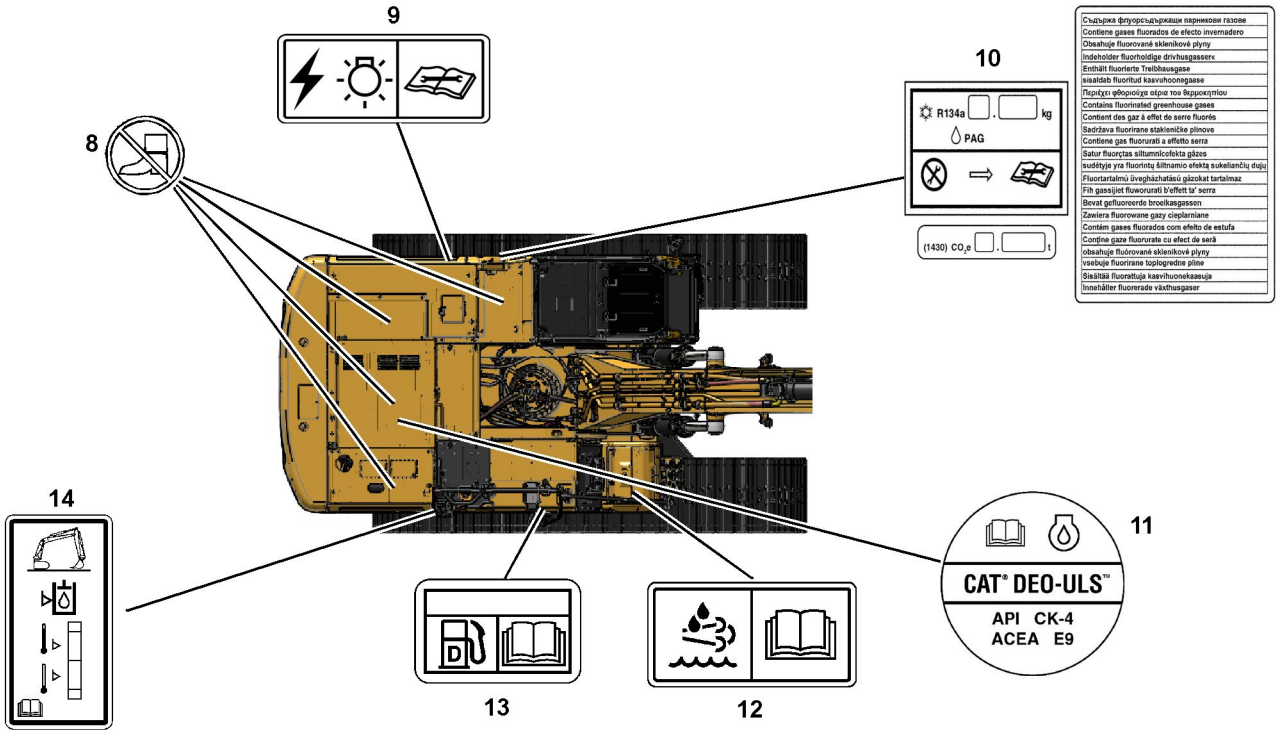

Illustration 31 g06289600

Front Window Usage (1)

For machines equipped with the Cat Grade monitor, the monitor must be moved downward before lifting or lowering the front window. The monitor is in the path of the window track when the monitor is in the normal position.

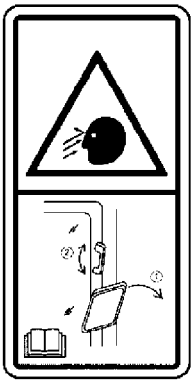

Illustration 32 g06214810

Hammer Operation (2)

This message is on the window on the right side of the cab.

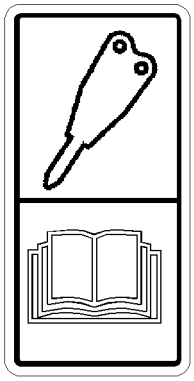

Illustration 33 g06189240

See Operation and Maintenance Manual, “Hammer Operation” within Operation and Maintenance Manual, “Work Tool Control (One-Way Flow)” for instructions on hammer operation.

Also, see Operation and Maintenance Manual, “Hydraulic Hammer Control (Foot Switch)” within Operation and Maintenance Manual, “Work Tool Control (One-Way Flow)” for instructions on hammer operation.

Data Privacy (3)

Illustration 34 g01418953

The Product Link System is a satellite communication device that transmits information regarding the machine back to Caterpillar and Cat dealers and customers. All logged events and diagnostic codes that are available to the Cat Electronic Technician (ET) on the Cat data link can be sent to the satellite. Information can also be sent to the Product Link System. The information is used to improve Cat products and Cat services.

Refer to Operation and Maintenance Manual, “Product Link” for more information.

Joystick Controls Alternate Patterns (4)

If equipped, this message is on the right side window of the cab.

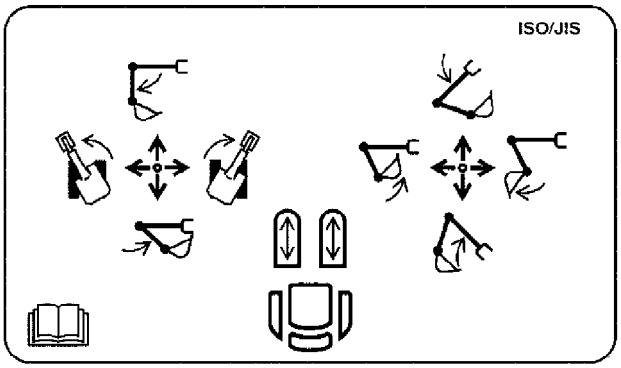

Illustration 35 g06214805

Refer to Operation and Maintenance Manual, “Joystick Controls Alternate Patterns” for further information.

Hose Burst (5)

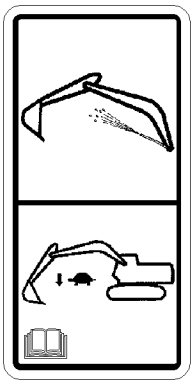

Illustration 36 g06189238

Hose Burst (6)

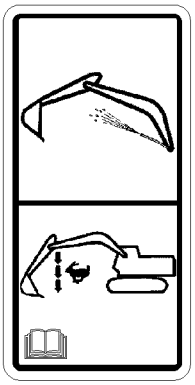

Illustration 37 g06189239

Alternate Exit (7)

If equipped, this message is on the rear window of the cab in the lower left-hand corner.

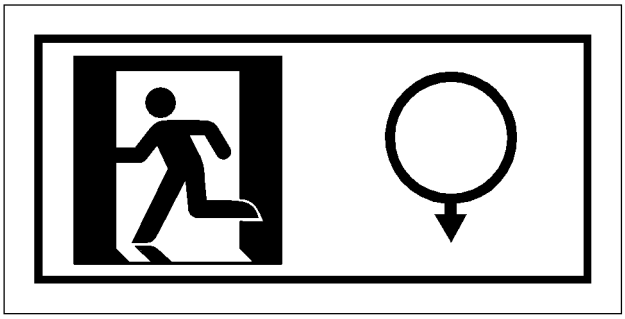

Illustration 38 g06189112

Pull the ring to pull out the seal. Push the window out of the cab and exit through the opening.

Refer to Operation and Maintenance Manual, “Alternate Exit” for further information.

No Step (8)

This message is on various places on the upper structure and covers. The message is also on the engine valve cover.

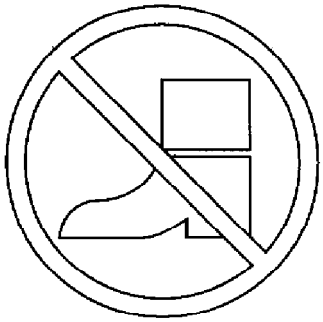

Illustration 39 g00911158

Do not step in this area.

DEF Purge Indicator Lamp (9)

This message is located behind the cab near the disconnect switch and pertains to the Diesel Exhaust Fluid (DEF) system.

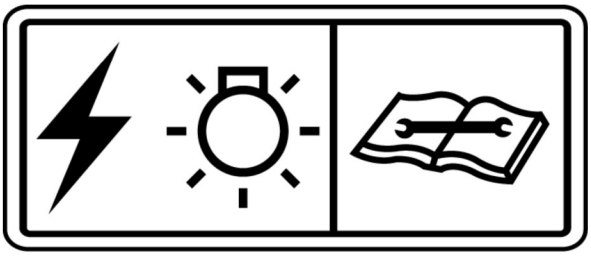

Illustration 40 g03796564

NOTICE
After the engine is shutdown apply the battery disconnect switch. Applying the battery disconnect too soon will prevent the DEF system from being purged and could cause DEF to freeze in the lines.

Note: This film is applicable only to machines equipped with Tier 4 engines.

Air Conditioner (10)

These messages are positioned on the left door behind the cab.

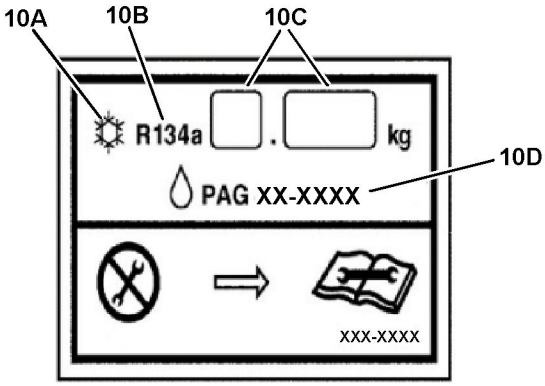

Illustration 41 g06214936

(10A) Air conditioning symbol
(10B) R134a (Refrigerant type common name)
(10C) Refrigerant quantity
(10D) PAG (polyalkylene glycol) lubricating oil part number

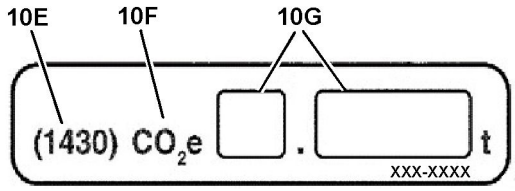

Illustration 42 g06214938

If equipped, this plate provides the below more European Union required greenhouse gas information.

(10E) (1430) - The Global Warming Potential of R134a
(10F) CO_2 equivalent
(10G) The system contains 1.430 metric tonne of CO_2 equivalent

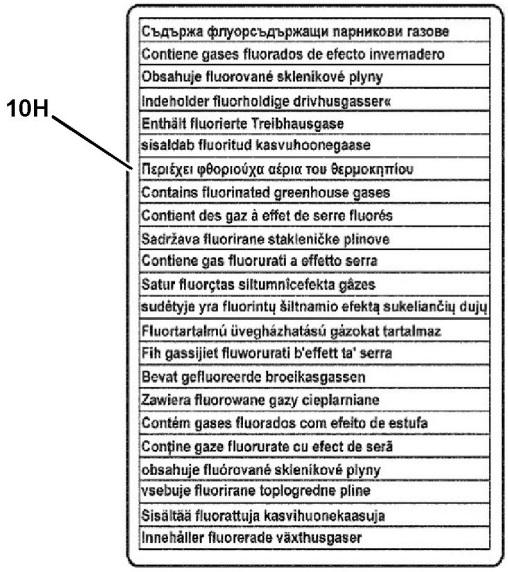

Illustration 43 g06214940

(10H) If equipped, this film provides the required language translations of the text "Contains fluorinated greenhouse gases" for the European Union greenhouse gas regulation.

These messages for the air conditioner system have the appropriate information for the following services: the air conditioner lubricant, the refrigerant charge, and the refrigerant capacity.

Engine Oil Requirements (11)

This message is on top of the engine.

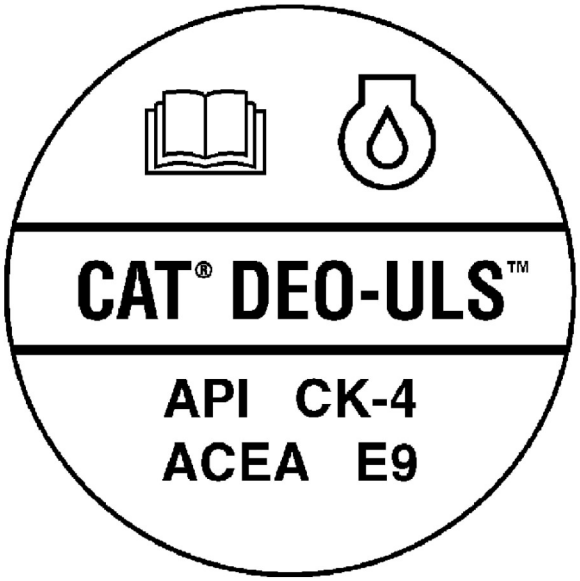

Illustration 44 g06208149

Tier 4 Engines

Refer to Operation and Maintenance Manual, “Lubricant Viscosities”.

DEF (12)

This message is located by the DEF tank.

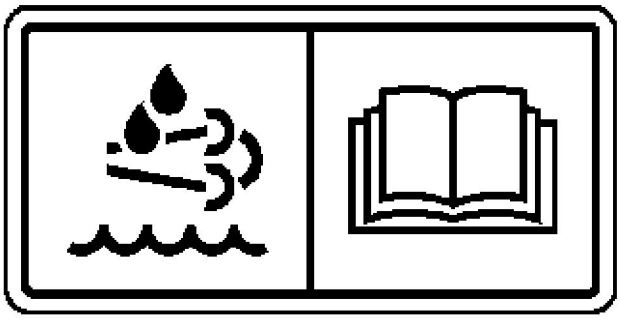

Illustration 45 g06289604

DEF is used in the SCR system. Refer to Operation and Maintenance Manual, “Lubricant Viscosities”.

Diesel Fuel Requirements (13)

This message is located by the fuel tank.

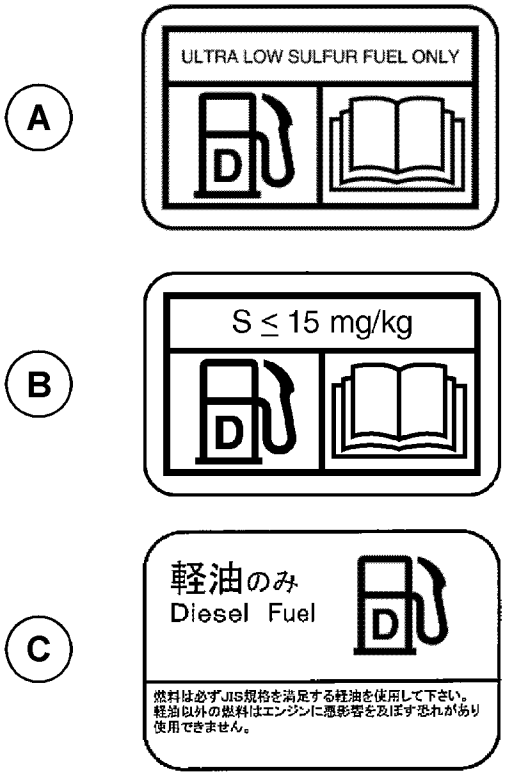

Illustration 46 g03218956

(A) North America film
(B) Europe, Africa, Middle East film
(C) Japan film

Hydraulic Oil Level Check (14)

This message is located in the right access compartment next to the sight gauge for the hydraulic oil .

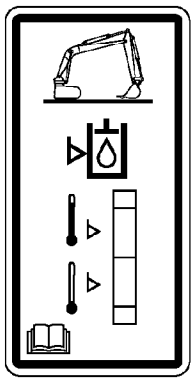

Illustration 47 g01069075

Check hydraulic oil level daily. See Operation and Maintenance Manual, “Hydraulic System Oil Level - Check” for details.

i07746355

General Hazard Information

SMCS Code: 7000

Illustration 48 g00104545

Typical example

Attach a “Do Not Operate” warning tag or a similar warning tag to the start switch or to the controls. Attach the warning tag before you service the equipment or before you repair the equipment. Warning tag SEHS7332 is available from your Cat dealer.

WARNING

Operating the machine while distracted can result in the loss of machine control. Use extreme caution when using any device while operating the machine. Operating the machine while distracted can result in personal injury or death.

Know the width of your equipment to maintain proper clearance when you operate the equipment near fences or near boundary obstacles.

Be aware of high-voltage power lines and power cables that are buried. If the machine comes in contact with these hazards, serious injury or death may occur from electrocution.

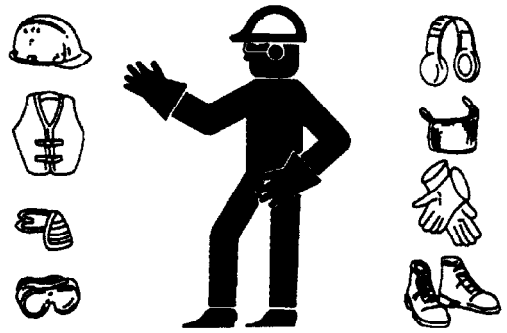

Illustration 49 g00702020

Wear a hard hat, protective glasses, and other protective equipment, as required.

Do not wear loose clothing or jewelry that can snag on controls or on other parts of the equipment.

Make sure that all protective guards and all covers are secured in place on the equipment.

Keep the equipment free from foreign material. Remove debris, oil, tools, and other items from the deck, from walkways, and from steps.

Secure all loose items such as lunch boxes, tools, and other items that are not a part of the equipment.

Know the appropriate work site hand signals and the personnel that are authorized to give the hand signals. Accept hand signals from one person only.

Do not smoke when you service an air conditioner. Also, do not smoke if refrigerant gas may be present. Inhaling the fumes that are released from a flame that contacts air conditioner refrigerant can cause bodily harm or death. Inhaling gas from air conditioner refrigerant through a lighted cigarette can cause bodily harm or death.

Never put maintenance fluids into glass containers. Drain all liquids into a suitable container.

Obey all local regulations for the disposal of liquids.

Use all cleaning solutions with care. Report all necessary repairs.

Do not allow unauthorized personnel on the equipment.

Unless you are instructed otherwise, perform maintenance with the equipment in the servicing position. Refer to Operation and Maintenance Manual for the procedure for placing the equipment in the servicing position.

When you perform maintenance above ground level, use appropriate devices such as ladders or man lift machines. If equipped, use the machine anchorage points and use approved fall arrest harnesses and lanyards.

Pressurized Air and Water

Pressurized air and/or water can cause debris and/or hot water to be blown out. The debris and/or hot water could result in personal injury.

When pressurized air and/or pressurized water is used for cleaning, wear protective clothing, protective shoes, and eye protection. Eye protection includes goggles or a protective face shield.

The maximum air pressure for cleaning purposes must be reduced to 205 kPa (30 psi) when the nozzle is deadheaded and the nozzle is used with an effective chip deflector and personal protective equipment. The maximum water pressure for cleaning purposes must be below 275 kPa (40 psi).

Avoid direct spraying of water on electrical connectors, connections, and components. When using air for cleaning, allow the machine to cool to reduce the possibility of fine debris igniting when re-deposited on hot surfaces.

Trapped Pressure

Pressure can be trapped in a hydraulic system. Releasing trapped pressure can cause sudden machine movement or attachment movement. Use caution if you disconnect hydraulic lines or fittings. High-pressure oil that is released can cause a hose to whip. High-pressure oil that is released can cause oil to spray. Fluid penetration can cause serious injury and possible death.

Fluid Penetration

Pressure can be trapped in the hydraulic circuit long after the machine has been stopped. The pressure can cause hydraulic fluid or items such as pipe plugs to escape rapidly if the pressure is not relieved correctly.

Do not remove any hydraulic components or parts until pressure has been relieved or personal injury may occur. Do not disassemble any hydraulic components or parts until pressure has been relieved or personal injury may occur. Refer to the Service Manual for any procedures that are required to relieve the hydraulic pressure.

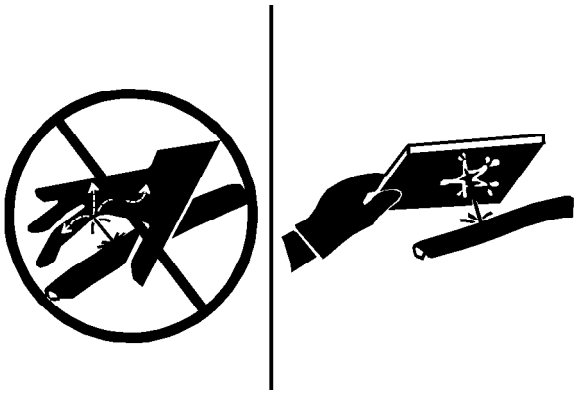

Illustration 50 g00687600

Always use a board or cardboard when you check for a leak. Leaking fluid that is under pressure can penetrate body tissue. Fluid penetration can cause serious injury and possible death. A pin hole leak can cause severe injury. If fluid is injected into your skin, you must get treatment immediately. Seek treatment from a doctor that is familiar with this type of injury.

Containing Fluid Spillage

Care must be taken in order to ensure that fluids are contained during performance of inspection, maintenance, testing, adjusting, and repair of the equipment. Prepare to collect the fluid with suitable containers before opening any compartment or disassembling any component that contains fluids.

Refer to Special Publication, NENG2500, “Cat dealer Service Tool Catalog” for the following items:

- Tools that are suitable for collecting fluids and equipment that is suitable for collecting fluids
- Tools that are suitable for containing fluids and equipment that is suitable for containing fluids

Obey all local regulations for the disposal of liquids.

Inhalation

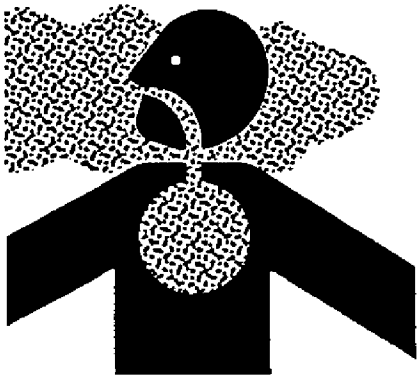

Illustration 51 g02159053

Exhaust

Use caution. Exhaust fumes can be hazardous to your health. If you operate the machine in an enclosed area, adequate ventilation is necessary.

Asbestos Information

Cat equipment and replacement parts that are shipped from Caterpillar are asbestos free. Caterpillar recommends the use of only genuine Cat replacement parts. Use the following guidelines when you handle any replacement parts that contain asbestos or when you handle asbestos debris.

Use caution. Avoid inhaling dust that might be generated when you handle components that contain asbestos fibers. Inhaling this dust can be hazardous to your health. The components that may contain asbestos fibers are brake pads, brake bands, lining material, clutch plates, and some gaskets. The asbestos that is used in these components is bound in a resin or sealed in some way. Normal handling is not hazardous unless airborne dust that contains asbestos is generated.

If dust that may contain asbestos is present, there are several guidelines that should be followed:

- Never use compressed air for cleaning.
- Avoid brushing materials that contain asbestos.
- Avoid grinding materials that contain asbestos.
- Use a wet method in order to clean up asbestos materials.
- A vacuum cleaner that is equipped with a high efficiency particulate air filter (HEPA) can also be used.

- Use exhaust ventilation on permanent machining jobs.
- Wear an approved respirator if there is no other way to control the dust.
- Comply with applicable rules and regulations for the work place. In the United States, use Occupational Safety and Health Administration (OSHA) requirements. These OSHA requirements can be found in “29 CFR 1910.1001”. In Japan, use the requirements found in the “Ordinance on Prevention of Health Impairment due to Asbestos” in addition to the requirements of the Industrial Safety and Health Act.
- Obey environmental regulations for the disposal of asbestos.
- Stay away from areas that might have asbestos particles in the air.

Dispose of Waste Properly

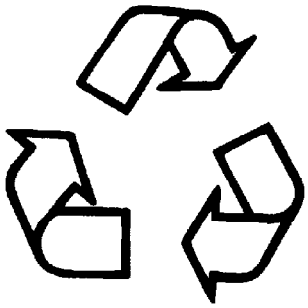

Illustration 52 g00706404

Improperly disposing of waste can threaten the environment. Potentially harmful fluids should be disposed of according to local regulations.

Always use leakproof containers when you drain fluids. Do not pour waste onto the ground, down a drain, or into any source of water.

i01359664

Crushing Prevention and Cutting Prevention

SMCS Code: 7000

Support the equipment properly before you perform any work or maintenance beneath that equipment. Do not depend on the hydraulic cylinders to hold up the equipment. Equipment can fall if a control is moved, or if a hydraulic line breaks.

Do not work beneath the cab of the machine unless the cab is properly supported.

Unless you are instructed otherwise, never attempt adjustments while the machine is moving or while the engine is running.

Never jump across the starter solenoid terminals in order to start the engine. Unexpected machine movement could result.

Whenever there are equipment control linkages the clearance in the linkage area will change with the movement of the equipment or the machine. Stay clear of areas that may have a sudden change in clearance with machine movement or equipment movement.

Stay clear of all rotating and moving parts.

If it is necessary to remove guards in order to perform maintenance, always install the guards after the maintenance is performed.

Keep objects away from moving fan blades. The fan blade will throw objects or cut objects.

Do not use a kinked wire cable or a frayed wire cable. Wear gloves when you handle wire cable.

When you strike a retainer pin with force, the retainer pin can fly out. The loose retainer pin can injure personnel. Make sure that the area is clear of people when you strike a retainer pin. To avoid injury to your eyes, wear protective glasses when you strike a retainer pin.

Chips or other debris can fly off an object when you strike the object. Make sure that no one can be injured by flying debris before striking any object.

i07746334

Burn Prevention

SMCS Code: 7000

Do not touch any part of an operating engine. Allow the engine to cool before any maintenance is performed on the engine. Relieve all pressure in the air system, in the oil system, in the lubrication system, in the fuel system, or in the cooling system before any lines, fittings, or related items are disconnected.

Coolant

When the engine is at operating temperature, the engine coolant is hot. The coolant is also under pressure. The radiator and all lines to the heaters or to the engine contain hot coolant.

Any contact with hot coolant or with steam can cause severe burns. Allow cooling system components to cool before the cooling system is drained.

Check the coolant level only after the engine has been stopped.

Ensure that the filler cap is cool before removing the filler cap. The filler cap must be cool enough to touch with a bare hand. Remove the filler cap slowly to relieve pressure.

Cooling system conditioner contains alkali. Alkali can cause personal injury. Do not allow alkali to contact the skin, the eyes, or the mouth.

Oils

Hot oil and hot components can cause personal injury. Do not allow hot oil to contact the skin. Also, do not allow hot components to contact the skin.

Remove the hydraulic tank filler cap only after the engine has been stopped. The filler cap must be cool enough to touch with a bare hand. Follow the standard procedure in this manual to remove the hydraulic tank filler cap.

Batteries

The liquid in a battery is an electrolyte. Electrolyte is an acid that can cause personal injury. Do not allow electrolyte to contact the skin or the eyes.

Do not smoke while checking the battery electrolyte levels. Batteries give off flammable fumes which can explode.

Always wear protective glasses when you work with batteries. Wash hands after touching batteries. The use of gloves is recommended.

i06179517

Fire Prevention and Explosion Prevention

SMCS Code: 7000

Illustration 53 g00704000

Regeneration

The exhaust gas temperatures during regeneration will be elevated. Follow proper fire prevention instructions and use the disable regeneration function (if equipped) when appropriate.

General

All fuels, most lubricants, and some coolant mixtures are flammable.

To minimize the risk of fire or explosion, Caterpillar recommends the following actions.

Always perform a Walk-Around Inspection, which may help you identify a fire hazard. Do not operate a machine when a fire hazard exists. Contact your Cat dealer for service.

Understand the use of the primary exit and alternative exit on the machine. Refer to Operation and Maintenance Manual, “Alternative Exit”.

Do not operate a machine with a fluid leak. Repair leaks and clean up fluids before resuming machine operation. Fluids that are leaking or spilled onto hot surfaces or onto electrical components can cause a fire. A fire may cause personal injury or death.

Remove flammable material such as leaves, twigs, papers, trash, and so on. These items may accumulate in the engine compartment or around other hot areas and hot parts on the machine.

Keep the access doors to major machine compartments closed and access doors in working condition in order to permit the use of fire suppression equipment, in case a fire should occur.

Clean all accumulations of flammable materials such as fuel, oil, and debris from the machine.

Do not operate the machine near any flame.

Keep shields in place. Exhaust shields (if equipped) protect hot exhaust components from oil spray or fuel spray in a break in a line, in a hose, or in a seal. Exhaust shields must be installed correctly.

Do not weld or flame cut on tanks or lines that contain flammable fluids or flammable material. Empty and purge the lines and tanks. Then clean the lines and tanks with a nonflammable solvent prior to welding or flame cutting. Ensure that the components are properly grounded in order to avoid unwanted arcs.

Dust that is generated from repairing nonmetallic hoods or fenders may be flammable and/or explosive. Repair such components in a ventilated area away from open flames or sparks. Use suitable Personal Protection Equipment (PPE).

Inspect all lines and hoses for wear or deterioration. Replace damaged lines and hoses. The lines and the hoses should have adequate support and secure clamps. Tighten all connections to the recommended torque. Damage to the protective cover or insulation may provide fuel for fires.

Store fuels and lubricants in properly marked containers away from unauthorized personnel. Store oily rags and flammable materials in protective containers. Do not smoke in areas that are used for storing flammable materials.

Illustration 54 g03839130

Use caution when you are fueling a machine. Do not smoke while you are fueling a machine. Do not fuel a machine near open flames or sparks. Do not use cell phones or other electronic devices while you are refueling. Always stop the engine before fueling. Fill the fuel tank outdoors. Properly clean areas of spillage.

Avoid static electricity risk when fueling. Ultra low sulfur diesel (ULSD) poses a greater static ignition hazard than earlier diesel formulations with a higher sulfur content. Avoid death or serious injury from fire or explosion. Consult with your fuel or fuel system supplier to ensure that the delivery system is in compliance with fueling standards for proper grounding and bonding practices.

Never store flammable fluids in the operator compartment of the machine.

Battery and Battery Cables

Illustration 55 g03839133

Caterpillar recommends the following in order to minimize the risk of fire or an explosion related to the battery.

Do not operate a machine if battery cables or related parts show signs of wear or damage. Contact your Cat dealer for service.

Follow safe procedures for engine starting with jump-start cables. Improper jumper cable connections can cause an explosion that may result in injury. Refer to Operation and Maintenance Manual, “Engine Starting with Jump Start Cables” for specific instructions.

Do not charge a frozen battery. This may cause an explosion.

Gases from a battery can explode. Keep any open flames or sparks away from the top of a battery. Do not smoke in battery charging areas. Do not use cell phones or other electronic devices in battery charging areas.

Never check the battery charge by placing a metal object across the terminal posts. Use a voltmeter in order to check the battery charge.

Daily inspect battery cables that are in areas that are visible. Inspect cables, clips, straps, and other restraints for damage. Replace any damaged parts. Check for signs of the following, which can occur over time due to use and environmental factors:

- Fraying
- Abrasion
- Cracking
- Discoloration
- Cuts on the insulation of the cable
- Fouling
- Corroded terminals, damaged terminals, and loose terminals

Replace damaged battery cable(s) and replace any related parts. Eliminate any fouling, which may have caused insulation failure or related component damage or wear. Ensure that all components are reinstalled correctly.

An exposed wire on the battery cable may cause a short to ground if the exposed area comes into contact with a grounded surface. A battery cable short produces heat from the battery current, which may be a fire hazard.

An exposed wire on the ground cable between the battery and the disconnect switch may cause the disconnect switch to be bypassed if the exposed area comes into contact with a grounded surface. This may result in an unsafe condition for servicing the machine. Repair components or replace components before servicing the machine.

⚠ WARNING

Fire on a machine can result in personal injury or death. Exposed battery cables that come into contact with a grounded connection can result in fires. Replace cables and related parts that show signs of wear or damage. Contact your Cat dealer.

Wiring

Check electrical wires daily. If any of the following conditions exist, replace parts before you operate the machine.

- Fraying
- Signs of abrasion or wear
- Cracking
- Discoloration
- Cuts on insulation
- Other damage

Make sure that all clamps, guards, clips, and straps are reinstalled correctly. This will help to prevent vibration, rubbing against other parts, and excessive heat during machine operation.

Attaching electrical wiring to hoses and tubes that contain flammable fluids or combustible fluids should be avoided.

Consult your Cat dealer for repair or for replacement parts.

Keep wiring and electrical connections free of debris.

Lines, Tubes, and Hoses

Do not bend high-pressure lines. Do not strike high-pressure lines. Do not install any lines that are bent or damaged. Use the appropriate backup wrenches in order to tighten all connections to the recommended torque.

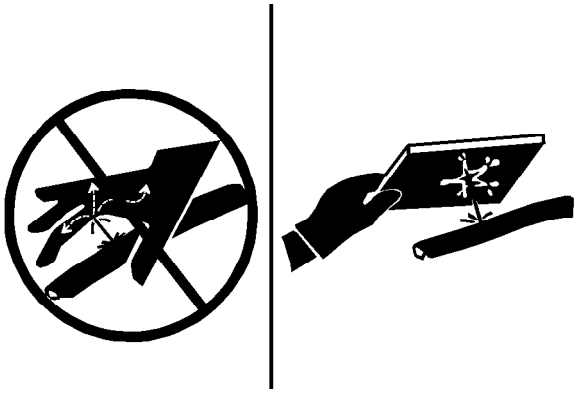

Illustration 56 g00687600

Check lines, tubes, and hoses carefully. Wear Personal Protection Equipment (PPE) in order to check for leaks. Always use a board or cardboard when you check for a leak. Leaking fluid that is under pressure can penetrate body tissue. Fluid penetration can cause serious injury and possible death. A pin hole leak can cause severe injury. If fluid is injected into your skin, you must get treatment immediately. Seek treatment from a doctor that is familiar with this type of injury.

Replace the affected parts if any of the following conditions are present:

- End fittings are damaged or leaking.
- Outer coverings are chafed or cut.
- Wires are exposed.
- Outer coverings are swelling or ballooning.
- Flexible parts of the hoses are kinked.
- Outer covers have exposed embedded armoring.
- End fittings are displaced.

Make sure that all clamps, guards, and heat shields are installed correctly. During machine operation, this will help to prevent vibration, rubbing against other parts, excessive heat, and failure of lines, tubes, and hoses.

Do not operate a machine when a fire hazard exists. Repair any lines that are corroded, loose, or damaged. Leaks may provide fuel for fires. Consult your Cat dealer for repair or for replacement parts. Use genuine Cat parts or the equivalent, for capabilities of both the pressure limit and temperature limit.

Ether

Ether (if equipped) is commonly used in cold-weather applications. Ether is flammable and poisonous.

Only use approved Ether canisters for the Ether dispensing system fitted to your machine, do not spray Ether manually into an engine, follow the correct cold engine starting procedures. Refer to the section in the Operation and Maintenance Manual with the label “Engine Starting” .

⚠ WARNING

Manually spraying Ether into an engine with a Diesel Particulate Filter (DPF) may result in the accumulation of Ether in the DPF and an explosion. This in conjunction with other factors may result in an injury or death.

Use ether in ventilated areas. Do not smoke while you are replacing an ether cylinder.

Do not store ether cylinders in living areas or in the operator compartment of a machine. Do not store ether cylinders in direct sunlight or in temperatures above 49° C (120.2° F). Keep ether cylinders away from open flames or sparks.

Dispose of used ether cylinders properly. Do not puncture an ether cylinder. Keep ether cylinders away from unauthorized personnel.

Fire Extinguisher

As an additional safety measure, keep a fire extinguisher on the machine.

Be familiar with the operation of the fire extinguisher. Inspect the fire extinguisher and service the fire extinguisher regularly. Follow the recommendations on the instruction plate.

Consider installation of an aftermarket Fire Suppression System, if the application and working conditions warrant the installation.

i07041871

Fire Safety

SMCS Code: 7000

Note: Locate secondary exits and how to use the secondary exits before you operate the machine.

Note: Locate fire extinguishers and how to use a fire extinguisher before you operate the machine.

If you find that you are involved in a machine fire, your safety and that of others on site are the top priority. The following actions should only be performed if the actions do not present a danger or risk to you and any nearby people. Assess the risk of personal injury and move away to a safe distance as soon as you feel unsafe.

Move the machine away from nearby combustible material such as fuel/oil stations, structures, trash, mulch, and timber.

Lower any implements and turn off the engine as soon as possible. If you leave the engine running, the engine will continue to feed a fire. The fire will be fed from any damaged hoses that are attached to the engine or pumps.

If possible, turn the battery disconnect switch to the OFF position. Disconnecting the battery will remove the ignition source in the event of an electrical short. Disconnecting the battery will eliminate a second ignition source if electrical wiring is damaged by the fire, resulting in a short circuit.

Notify emergency personnel of the fire and your location.

If your machine is equipped with a fire suppression system, follow the manufacturers procedure for activating the system.

Note: Fire suppression systems need to be regularly inspected by qualified personnel. You must be trained to operate the fire suppression system.

If you are unable to do anything else, shut off the machine before exiting. By shutting off the machine, fuels will not continue to be pumped into the fire.

If the fire grows out of control, be aware of the following risks:

- Tires on wheeled machines pose a risk of explosion as tires burn. Hot shrapnel and debris can be thrown great distances in an explosion.
- Tanks, accumulators, hoses, and fittings can rupture in a fire, spraying fuels and shrapnel over a large area.
- Remember that nearly all the fluids on the machine are flammable, including coolant and oils. Additionally, plastics, rubbers, fabrics, and resins in fiberglass panels are also flammable.

i07045544

Fire Extinguisher Location

SMCS Code: 7000; 7419

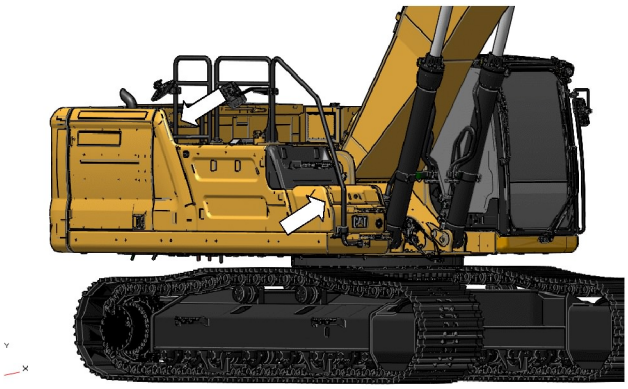

Illustration 57 g06207808

Make sure that a fire extinguisher is available. Be familiar with the operation of the fire extinguisher. Inspect the fire extinguisher and service the fire extinguisher regularly. Obey the recommendations on the instruction plate.

The recommended location for mounting the fire extinguisher is in the storage box. The fire extinguisher may also be mounted on the upper handrail on the right side of the machine.

i01329108

Track Information

SMCS Code: 4170; 7000

Track adjusting systems use either grease or oil under high pressure to keep the track under tension.

Grease or oil under high pressure coming out of the relief valve can penetrate the body causing injury or death. Do not watch the relief valve to see if grease or oil is escaping. Watch the track or track adjustment cylinder to see if the track is being loosened.

The pins and bushings in a dry track pin joint can become very hot. It is possible to burn the fingers if there is more than brief contact with these components.

i02546320

High Pressure Fuel Lines

SMCS Code: 1000; 1274; 7000

WARNING

Contact with high pressure fuel may cause fluid penetration and burn hazards. High pressure fuel spray may cause a fire hazard. Failure to follow these inspection, maintenance and service instructions may cause personal injury or death.

The high pressure fuel lines are the fuel lines that are between the high pressure fuel pump and the high pressure fuel manifold and the fuel lines that are between the fuel manifold and cylinder head. These fuel lines are different from fuel lines on other fuel systems.

This is because of the following differences:

- The high pressure fuel lines are constantly charged with high pressure.
- The internal pressures of the high pressure fuel lines are higher than other types of fuel system.
- The high pressure fuel lines are formed to shape and then strengthened by a special process.

Do not step on the high pressure fuel lines. Do not deflect the high pressure fuel lines. Do not bend or strike the high pressure fuel lines. Deformation or damage of the high pressure fuel lines may cause a point of weakness and potential failure.

Do not check the high pressure fuel lines with the engine or the starting motor in operation. After the engine has stopped allow 10 minutes to pass in order to allow the pressure to be purged before any service or repair is performed on the engine fuel lines.

Do not loosen the high pressure fuel lines in order to remove air from the fuel system. This procedure is not required.

Visually inspect the high pressure fuel lines before the engine is started. This inspection should be each day.

If you inspect the engine in operation, always use the proper inspection procedure in order to avoid a fluid penetration hazard. Refer to Operation and Maintenance Manual, “General hazard Information”.

- Inspect the high pressure fuel lines for damage, deformation, a nick, a cut, a crease, or a dent.
- Do not operate the engine with a fuel leak. If there is a leak do not tighten the connection in order to stop the leak. The connection must only be tightened to the recommended torque. Refer to Disassembly and Assembly for your engine.
- If the high pressure fuel lines are torqued correctly and the high pressure fuel lines are leaking the high pressure fuel lines must be replaced.
- Ensure that all clips on the high pressure fuel lines are in place. Do not operate the engine with clips that are damaged, missing or loose.
- Do not attach any other item to the high pressure fuel lines.
- Loosened high pressure fuel lines must be replaced. Also removed high pressure fuel lines must be replaced. Refer to Disassembly and Assembly for your engine.

i01122596

Electrical Storm Injury Prevention

SMCS Code: 7000

When lightning is striking in the vicinity of the machine, the operator should never attempt the following procedures:

- Mount the machine.
- Dismount the machine.

If you are in the operator's station during an electrical storm, stay in the operator's station. If you are on the ground during an electrical storm, stay away from the vicinity of the machine.

i00771840

Before Starting Engine

SMCS Code: 1000; 7000

Start the engine only from the operator compartment. Never short across the starter terminals or across the batteries. Shorting could damage the electrical system by bypassing the engine neutral start system.

Inspect the condition of the seat belt and of the mounting hardware. Replace any parts that are worn or damaged. Regardless of appearance, replace the seat belt after three years of use. Do not use a seat belt extension on a retractable seat belt.

Adjust the seat so that full pedal travel can be achieved with the operator's back against the back of the seat.

Make sure that the machine is equipped with a lighting system that is adequate for the job conditions. Make sure that all machine lights are working properly.

Before you start the engine and before you move the machine, make sure that no one is underneath the machine, around the machine, or on the machine. Make sure that the area is free of personnel.

i07746368

Visibility Information

SMCS Code: 7000

Before you start the machine, perform a walk-around inspection in order to ensure that there are no hazards around the machine.

While the machine is in operation, constantly survey the area around the machine in order to identify potential hazards as hazards become visible around the machine.

Your machine may be equipped with visual aids. Some examples of visual aids are Closed Circuit Television (CCTV) and mirrors. Before operating the machine, ensure that the visual aids are in proper working condition and that the visual aids are clean. Adjust the visual aids using the procedures that are located in this Operation and Maintenance Manual. If equipped, the Work Area Vision System shall be adjusted according to Operation and Maintenance Manual, SEBU8157, “Work Area Vision System”. If equipped, the Cat Detect Object Detection shall be adjusted according to the Operation and Maintenance Manual, “Cat Detect Object Detection” for your machine.

It may not be possible to provide direct visibility on large machines to all areas around the machine. Appropriate job site organization is required in order to minimize hazards that are caused by restricted visibility. Job site organization is a collection of rules and procedures that coordinates machines and people that work together in the same area. Examples of job site organization include the following:

- Safety instructions
- Controlled patterns of machine movement and vehicle movement
- Workers that direct safe movement of traffic
- Restricted areas
- Operator training
- Warning symbols or warning signs on machines or on vehicles
- A system of communication
- Communication between workers and operators prior to approaching the machine

Modifications of the machine configuration by the user that result in a restriction of visibility shall be evaluated.

i08033778

Restricted Visibility

SMCS Code: 7000

The size and the configuration of this machine may result in areas that cannot be seen when the operator is seated. For restricted visibility areas, an appropriate job site organization must be utilized to minimize hazards of this restricted visibility. For more information regarding job site organization refer to Operation and Maintenance Manual, “Visibility Information”.

Illustrations 58 - 61 provide an approximate visual indication of the areas at ground level inside a radius of 12 m (39 ft) from the operator of significant restricted visibility for various machine configurations. Refer to the correct illustration for your machine configuration. All restricted visibility areas less than 300 mm wide may not be shown. These illustrations do not indicate areas of restricted visibility for distances outside of the shown radius. The areas of restricted visibility shown in the illustrations are with the track and work tool of the machine in the Travel position. Illustration 62 shows the position of the work tool in the travel position. The Caterpillar authorized work tool that resulted in the largest visibility restriction was used.

Illustration 58 indicates restricted visibility areas at ground level inside the shown radius from the operator without the use of visual aids that may be optional for this product in some markets.

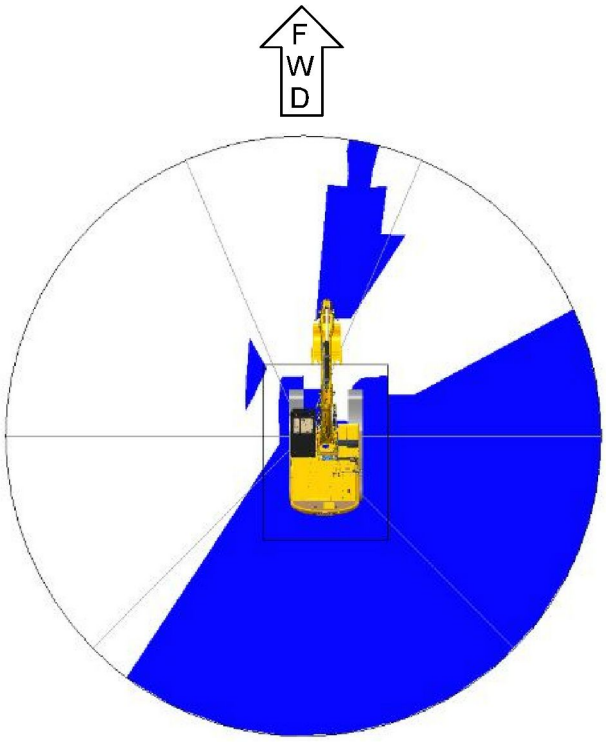

Illustration 58 g06356058

Top view of the machine, ground level visibility without use of optional visual aids

(A) 12 m (39 ft)

Note: The shaded areas indicate the approximate location of areas with significant restricted visibility.

Illustration 59 indicates restricted visibility areas at ground level inside the shown radius from the operator with the use of rear camera, right side mirror, left side mirror, and left side second mirror (if equipped).

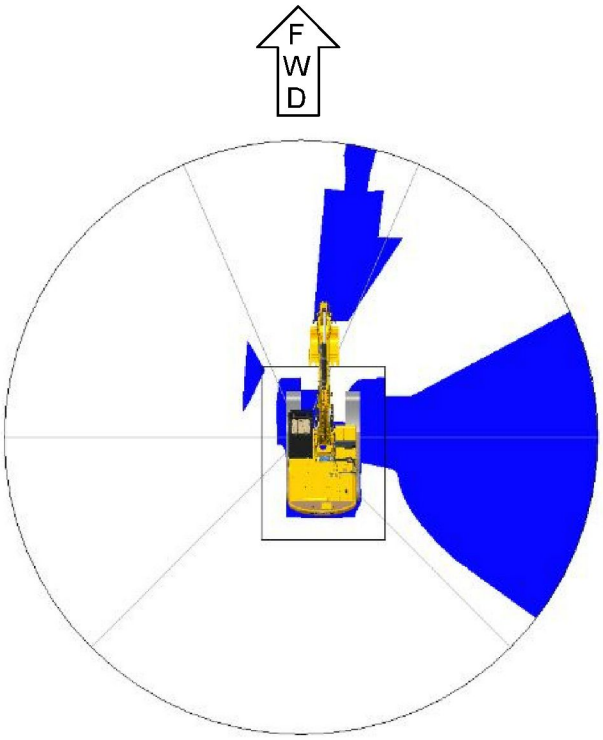

Illustration 59 g06356070

Top view of the machine, ground level visibility with rear camera, right side mirror, left side mirror, and left side second mirror (if equipped)

(A) 12 m (39 ft)

Note: The shaded areas indicate the approximate location of areas with significant restricted visibility.

Illustration 60 indicates restricted visibility areas at ground level inside the shown radius from the operator with the use of rear camera, right side camera, left side mirrors, and left side second mirror (if equipped).

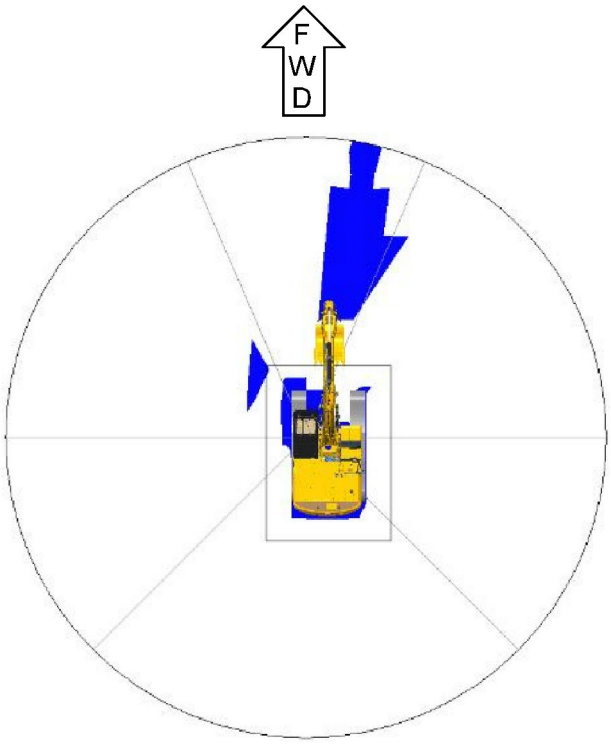

Illustration 60 g06356105

Top view of the machine, ground level visibility with rear camera, right side camera, left side mirror, and left side second mirror (if equipped).

(A) 12 m (39 ft)

Note: The shaded areas indicate the approximate location of areas with significant restricted visibility.

Illustration 61 indicates restricted visibility areas at ground level inside the shown radius from the monitor in the operator station with the use of 360 visibility.

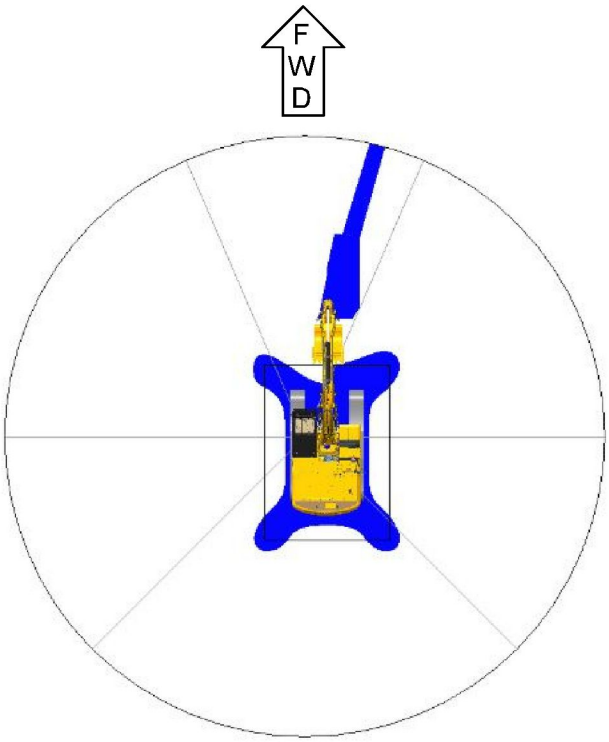

Illustration 61 g06356117

Top view of the machine with 360 visibility through the monitor

Note: The shaded areas indicate the approximate location of areas with significant restricted visibility.

Restricted visibility is measured when the front linkage of the machine is in the travel position. Illustration 62 shows the machine in the travel position.

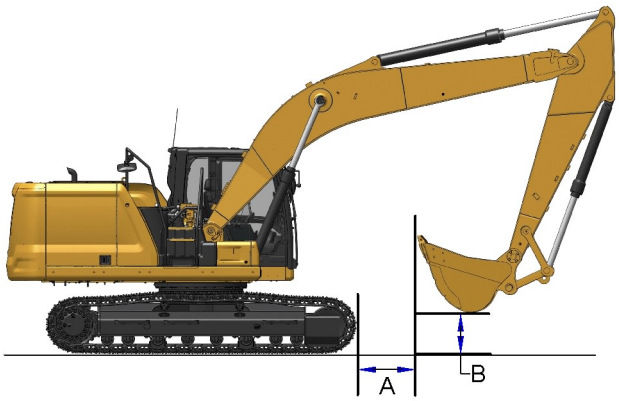

Illustration 62 g06181081

(A) 1 m (3.0 ft) from the front of the machine to the bucket
(B) 0.5 m (1.6 ft) from ground level

i03562260

Engine Starting

SMCS Code: 1000; 7000

If a warning tag is attached to the engine start switch or to the controls, do not start the engine. Also, do not move any controls.

Make sure that you are seated before you start the engine.

Move all hydraulic controls to the HOLD position before you start the engine. Move the hydraulic lockout control to the LOCKED position. For further details on this procedure, refer to Operation and Maintenance Manual, “Operator Controls”.

Diesel engine exhaust contains products of combustion which can be harmful to your health. Always run the engine in a well ventilated area. If you are in an enclosed area, vent the exhaust to the outside.

Briefly sound the horn before you start the engine.

i01340061

Before Operation

SMCS Code: 7000

Clear all personnel from the machine and from the area.

Clear all obstacles from the machine's path. Beware of hazards (wires, ditches, etc).

Be sure that all windows are clean. Secure the doors and the windows in the open position or in the shut position.

Adjust the rearview mirrors (if equipped) for the best visibility close to the machine. Make sure that the horn, the travel alarm (if equipped), and all other warning devices are working properly.

Fasten the seat belt securely.

Warm up the engine and the hydraulic oil before operating the machine.

Before moving the machine, check the position of the undercarriage. The normal travel position is with the idler wheels to the front under the cab and the drive sprockets to the rear. When the undercarriage is in the reversed position, the directional controls must be operated in opposite directions.

i04159629

Work Tools

SMCS Code: 6700

Only use work tools that are recommended by Caterpillar for use on Cat machines.

Use of work tools, including buckets, which are outside of Caterpillar's recommendations or specifications for weight, dimensions, flows, pressures, and so on. may result in less-than-optimal vehicle performance, including but not limited to reductions in production, stability, reliability, and component durability. Caterpillar recommends appropriate work tools for our machines to maximize the value our customers receive from our products. Caterpillar understands that special circumstances may lead a customer to use tools outside of our specifications. In these cases, customers must be aware that such choices can reduce vehicle performance and will affect their ability to claim warranty in the event of what a customer may perceive as a premature failure.

Work tools and work tool control systems, that are compatible with your Cat machine, are required for safe machine operation and/or reliable machine operation. If you are in doubt about the compatibility of a particular work tool with your machine, consult your Cat dealer.

Make sure that all necessary guarding is in place on the host machine and on the work tool.

Keep all windows and doors closed on the host machine. A polycarbonate shield must be used when the host machine is not equipped with windows and when a work tool could throw debris.

Do not exceed the maximum operating weight that is listed on the ROPS certification.

If your machine is equipped with an extendable stick, install the transport pin when you are using the following work tools: hydraulic hammers, augers and compactors

Always wear protective glasses. Always wear the protective equipment that is recommended in the operation manual for the work tool. Wear any other protective equipment that is required for the operating environment.

To prevent personnel from being struck by flying objects, ensure that all personnel are out of the work area.

While you are performing any maintenance, any testing, or any adjustments to the work tool stay clear of the following areas: cutting edges, pinching surfaces and crushing surfaces.

Never use the work tool for a work platform.

i07199415

Assist and E-Fence

SMCS Code: 5050

WARNING

Personal Responsibility

When the Assist System is engaged, the Assist System will control various machine functions. The Assist System is not a substitute for the personal judgment of an operator for the present work site situation or work site conditions. Failure to pay attention to work site situations or work site conditions with the Assist System engaged could result in personal injury or death. Always be aware of the work site situation and work site conditions when operating the machine with the Assist System engaged.

WARNING

Be Alert

Due to system limitations with the Assist System, warnings from the Assist System may be issued late, improperly, or not at all. Failure to respond to warnings from the Assist System with appropriate action could result in personal injury or death. Always be alert when operating a machine with the Assist System engaged and be ready to intervene to prevent an accident.

Operation Guidance

- Ground personnel should maintain a safe distance from the machine. Remain out of the swing radius/swing zone, and always check for ground personnel in the swing radius/swing zone. Do not operate with ground personnel in the swing radius/swing zone.
- When setting height or load restrictions, make sure that any work tools that are attached are in the least favorable position.
- Check for the correct operation once the restriction has been set.
- Validate proper settings both initially and periodically during machine operation.
- Do not move the (machine) quickly when close to a restriction setting.
- Do not operate the machine in a reckless manner.
- Do not travel with the restriction set.
- Reset the load restriction if the machine is moved to a different location.
- Always check settings or reestablish desired settings after leaving the machine for any period to ensure desired performance.
- If the proper setting procedure has been followed, but the system does not appear to be functioning properly, consult your Cat dealer.

Hazard recommendations:

- Return the joysticks to the neutral position once a limit has been reached
- Operate the machine at a slow speed
- Do not travel

Lifting operations with the machine

- Ensure that Lift Mode is selected during lifting operations
- Operate the machine at a safe speed
- Take special care when traveling with a load attached

- Do not operate the machine in a reckless manner

i07889511

Operation

SMCS Code: 7000

Machine Operating Temperature Range

The machine must function satisfactorily in the anticipated ambient temperature limits that are encountered during operation. The standard machine configuration is intended for use within an ambient temperature range of −18 °C (0 °F) to 43 °C (109 °F). Special configurations for different ambient temperatures may be available. Consult your Cat dealer for additional information on special configurations of your machine.

Limiting Conditions and Criteria

Limiting conditions are immediate issues with this machine that must be addressed prior to continuing operation.

The Operation and Maintenance Manual, Safety Section describes limiting condition criteria for replacing items such as safety messages, seat belt and mounting hardware, lines, tubes, hoses, battery cables and related parts, electrical wires, and repairing any fluid leak.

The Operation and Maintenance Manual, Maintenance Interval Schedule describes limiting condition criteria that require repair or replacement for items (if equipped) such as alarms, horns, braking system, steering system, and rollover protective structures.

The Operation and Maintenance Manual, Monitoring System (if equipped) provides information on limiting condition criteria, including a Warning Category 3 that requires immediate shutdown of the engine.

Critical Failures

The following table provides summary information on several limiting conditions found in this Operation and Maintenance Manual. The table provides criteria and required action for the limiting conditions listed. Each System or Component in this table, together with the respective limiting condition, describes a potential critical failure that must be addressed. Not addressing limiting conditions with required actions may, in conjunction with other factors or circumstances, result in a risk of personal injury or death. If an accident occurs, notify emergency personnel and provide location and description of accident.

Table 1

System or Component Name	Limiting Condition	Criteria for Action	Required Action
Line, tubes, and hoses	End fittings are damaged or leaking. Outer coverings are chafed or cut. Wires are exposed. Outer coverings are swelling or ballooning. Flexible parts of the hoses are kinked. Outer covers have exposed embedded armoring. End fittings are displaced.	Visible corrosion, loose, or damaged lines, tubes, or hoses. Visible fluid leaks.	Immediately repair any lines, tubes, or hoses that are corroded, loose, or damaged. Immediately repair any leaks as these may provide fuel for fires.
Electrical Wiring	Signs of fraying, abrasion, cracking, discoloration, cuts on the insulation	Visible damage to electrical wiring	Immediately replace damaged wiring
Battery cable(s)	Signs of fraying, abrasion, cracking, discoloration, cuts on the insulation of the cable, fouling, corroded terminals, damaged terminals, and loose terminals	Visible damage to battery cable(s)	Immediately replace damaged battery cables
Operator Protective Structure	Structures that are bent, cracked, or loose. Loose, missing, or damaged bolts.	Visible damage to structure. Loose, missing, or damaged bolts.	Do not operate machine with damaged structure or loose, missing, or damaged bolts. Contact your Cat dealer for inspection and repair or replacement options.
Seat Belt	Worn or damaged seat belt or mounting hardware	Visible wear or damage	Immediately replace parts that are worn or damaged.
Seat Belt	Age of seat belt	Three years after date of installation	Replace seat belt three years after date of installation
Safety Messages	Appearance of safety message	Damage to safety messages making them illegible	Replace the illustrations if illegible.
Audible Warning Device(s) (if equipped)	Sound level of audible warning	Reduced or no audible warning present	Immediately repair or replace audible warning devices not working properly.
Camera(s) (if equipped)	Dirt or debris on camera lens	Dirt or debris obstructing camera view	Clean camera before operating machine.
Cab Windows (if equipped)	Dirt, debris, or damaged windows	Dirt or debris obstructing operator visibility. Any damaged windows.	Clean windows before operating machine. Repair or replace damaged windows before operating machine.
Mirrors (if equipped)	Dirt, debris, or damaged mirror	Dirt or debris obstructing operator visibility. Any damaged mirrors.	Clean mirrors before operating machine. Repair or replace damaged mirrors before operating machine.
Braking System	Inadequate braking performance	System does not pass Braking System - Test(s) included in Maintenance Section or in the Testing and Adjusting Manual	Contact your Cat dealer to inspect and, if necessary, repair the brake system.
Cooling System	The coolant temperature is too high.	Monitoring System displays Warning Category 3	Stop the engine immediately. Check the coolant level and check the radiator for debris. Refer to Operation and Maintenance Manual, Cooling System Coolant Level - Check. Check the fan drive belts for the water pump. Refer to Operation and Maintenance Manual, Belts - Inspect/Adjust/ Replace. Make any necessary repairs.
Engine Oil System	A problem has been detected with the engine oil pressure.	Monitoring System displays Warning Category 3	If the warning stays on during low idle, stop the engine and check the engine oil level. Perform any necessary repairs as soon as possible.
Engine system	An engine fault has been detected by the engine ECM.	Monitoring System displays Warning Category 3	Stop the engine immediately. Contact your Cat dealer for service.
Fuel System	A problem has been detected with the fuel system.	Monitoring System displays Warning Category 3	Stop the engine. Determine the cause of the fault and perform any necessary repairs.
Hydraulic Oil System	The hydraulic oil temperature is too high.	Monitoring System displays Warning Category 3	Stop the engine immediately. Check the hydraulic oil level and check the hydraulic oil cooler for debris. Perform any necessary repairs as soon as possible.

(continued)

(Table 1, contd)

System or Component Name	Limiting Condition	Criteria for Action	Required Action
Steering System	A problem has been detected with the steering system. (If equipped with steering system monitoring.)	Monitoring System displays Warning Category 3	Move machine to a safe location and stop the engine immediately. Contact your Cat dealer to inspect and, if necessary, repair the steering system.
Overall Machine	Machine service is required.	Monitoring System displays Warning Category 3	Stop the engine immediately. Contact your Cat dealer for service.

Machine Operation

Only operate the machine while you are in a seat. The seat belt must be fastened while you operate the machine. Only operate the controls while the engine is running.

Check for proper operation of all controls and of all protective devices while you operate the machine slowly in an open area.

When the machine is moving watch the clearance of the boom. Uneven ground can cause the boom to move in all directions.

Make sure that no personnel will be endangered before you move the machine. Do not allow riders on the machine unless the machine has an additional seat with a seat belt.

Report any machine damage that was noted during machine operation. Make any necessary repairs.

Never use the work tool for a work platform.

Hold attachments approximately 40 cm (15 inches) above ground level while you drive the machine. Do not drive the machine close to an overhang, to the edge of a cliff, or to the edge of an excavation.

If the machine begins to sideslip on a grade, immediately dump the load and turn the machine downhill.

Be careful to avoid any ground condition which could cause the machine to tip. Tipping can occur when you work on hills, on banks, or on slopes. Tipping can also occur when you cross ditches, ridges, or other unexpected obstructions.

When possible, operate the machine up slopes and down slopes with the final drive sprockets facing down the slope. Avoid operating the machine across the slope. Place the heaviest end of the machine uphill when you are working on an incline.

Keep the machine under control. Do not overload the machine beyond capacity.

Avoid changing the direction of travel on a slope. Changing the direction of travel on a slope could result in tipping or side slipping of the machine.

Bring the load close to the machine before traveling any distances.

Bring the load close to the machine before swinging the load.

Lifting capacity decreases as the load is moved further from the machine.

Make sure that the towing eyes and the towing devices are adequate for your needs.

Only connect trailing equipment to a drawbar or to a hitch.

Never straddle a wire cable. Never allow other personnel to straddle a wire cable.

When you maneuver in order to connect the equipment, make sure that no personnel are between the machine and trailing equipment. Block up the hitch of the trailing equipment in order to align the equipment with the drawbar.

Check the local regulations, state codes, and/or directives of the job site for a specific minimum distance from obstacles.

Before you operate the machine, check with local utilities for the locations of underground pipes and for the locations of buried cables.

Know the maximum dimensions of your machine.

Watch the load at all times.

Do not operate the machine without the counterweight. The machine can tip when the boom is over the side.

The clamshell, the grapple, or the magnet can swing in all directions. Move the joysticks in a continuous motion. Failure to move the joysticks in a continuous motion can cause the clamshell, the grapple, or the magnet to swing into the cab or into a person in the work area. This will result in personal injury.

Certain machine front linkage combinations (boom, stick, quick coupler, work tool) can allow the work tool to contact the machine undercarriage, swing frame, boom, boom hydraulic cylinder and or the cab. Be aware of the position of the work tool while you operate the machine.

Shut down the machine until damaged or non-functioning visibility aid(s) is repaired (if applicable) or until appropriate job site organization is used to minimize hazards that are caused by any resulting restricted visibility.

Machine Operation when the Machine is not Completely Assembled

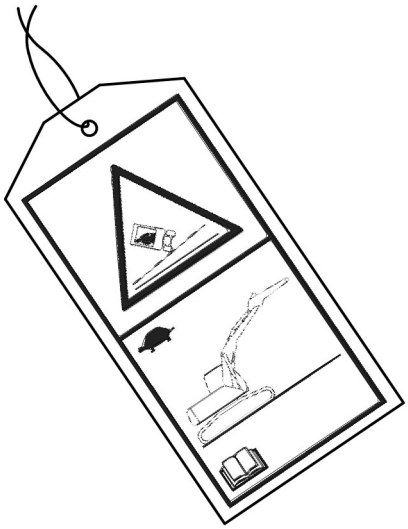

Illustration 63 g02202544

Attach the tag to the controls of the machine. When the tag is attached to the controls, operate the machine as described below.

If the machine needs to be operated without the boom, stick, and/or counterweight being installed, the machine should be operated slowly on flat, stable ground or pavement by qualified operators. Avoid any machine operations which could affect machine stability, including the swing function. The ROPS structural certification depends on the support of the boom, stick, and counterweight in the event of a machine tip over or a machine rollover incident.

i06299648

Engine Stopping

SMCS Code: 1000; 7000

Do not stop the engine immediately after the machine has been operated under load. Stopping the engine immediately can cause overheating and accelerated wear of engine components.

After the machine is parked and the parking brake is engaged, allow the engine to run at low idle for 5 minutes before shutdown. Running the engine allows hot areas of the engine to cool gradually.

i06589158

Lifting Objects

SMCS Code: 7000

There may be local regulations and/or government regulations that govern the use of machines which lift heavy objects. Obey all local and government regulations.

If this machine is used to lift objects within an area that is controlled by the European Directive “2006/42/EC”, the machine must be equipped with a boom lowering control valve, a stick lowering control valve, and an overload warning device.

If this machine is used to lift objects within Japan , Japanese regulations require the machine to be equipped with a shovel crane configuration.

Consult your Cat dealer for additional information.

i07749631

Demolition

SMCS Code: 6700

There maybe local regulations and/or government regulations that govern the use of machines which are designed and used as demolition machinery.

Note: Obey all local and government regulations.

Demolition machinery is designed for demolishing by pushing or pulling, or fragmenting. Demolition is done by crushing or shearing, buildings and/or other civil engineering structures and component parts and/or separating the resultant debris.

If this machine is used for demolition within an area that is controlled by the European Directive 2006/42/EC, the machine must be equipped with:

- Rollover Protective Structure (ROPS, not required for demolition excavators)
- Boom Lowering Control Valve (BLCV) / Stick Lowering Control Valve (SLCV)
- Top Guard / Front Guard
- Bottom / Motor / Swivel Guard
- EN 356 class P5A front window glass
- If a roof window is used to provide visibility to the working area, then roof window shall be equipped with motorized windscreen wipers and washers.

Demolition applications may generate flying debris. Ensure that there are no personnel in the area around the machine where flying debris may travel.

Demolition applications may generate airborne dust that can be hazardous to your health. If you operate the machine in a dust generating applications, use appropriate safeguarding or adequate ventilation to minimize risk.

i07538717

Parking

SMCS Code: 7000

The hydraulic system controls remain pressurized if the accumulator is charged. This condition is true even when the engine is not running. The hydraulic control system pressure should decrease in a short time (approximately 1 minute). While the hydraulic controls maintain a charge, the hydraulic work tools and machine controls remain functional.

There can be residual pressure within the hydraulic system even when the accumulator is empty. Refer to this Operation and Maintenance Manual, “System Pressure Relief” before any service is performed to the hydraulic system.

Machine movement that is sudden and unexpected will occur if any of the controls are moved. Machine movement that is sudden and unexpected, can cause personal injury or death.

Always move the hydraulic lockout control to the LOCKED position before you shut off the engine or immediately after the engine stops running.

Park the machine on a hard, level surface. If you must park the machine on a grade, chock the tracks of the machine.

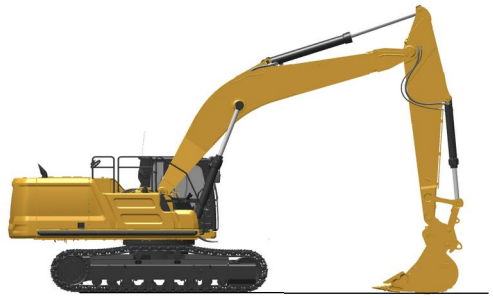

Illustration 64 g06289631

Place the machine in the servicing position.

Note: Make sure that all work tools are in the recommended servicing position before servicing the machine.

Move the hydraulic lockout control to the LOCKED position.

Stop the engine.

Turn the engine start ring to the OFF position or press button to stop engine.

Turn the battery disconnect switch to the OFF position.

Remove the disconnect switch key if you do not operate the machine for an extended period. This will prevent drainage of the battery. A battery short circuit, any current draw from certain components, and vandalism can cause drainage of the battery.

Install barriers or lighting as required to prevent interference in road traffic.

Select places free of danger by flooding and other water damage.

i07746366

Slope Operation

SMCS Code: 7000

Machines that are operating safely in various applications depend on these criteria: the machine model, configuration, machine maintenance, operating speed of the machine, conditions of the terrain, fluid levels, and tire inflation pressures. The most important criteria are the skill and judgment of the operator.

A well trained operator that follows the instructions in the Operation and Maintenance Manual has the greatest impact on stability. Operator training provides a person with the following abilities: observation of working and environmental conditions, feel for the machine, identification of potential hazards and operating the machine safely by making appropriate decisions.

When you work on side hills and when you work on slopes, consider the following important points:

Speed of travel – At higher speeds, forces of inertia tend to make the machine less stable.

Roughness of terrain or surface – The machine may be less stable with uneven terrain.

Direction of travel – Avoid operating the machine across the slope. When possible, operate the machine up the slopes and operate the machine down the slopes. Place the heaviest end of the machine uphill when you are working on an incline.

Mounted equipment – Balance of the machine may be impeded by the following components: equipment that is mounted on the machine, machine configuration, weights, and counterweights.

Nature of surface – Ground that has been newly filled with earth may collapse from the weight of the machine.

Surface material – Rocks and moisture of the surface material may drastically affect the machine's traction and machine's stability. Rocky surfaces may promote side slipping of the machine.

Slippage due to excessive loads – This may cause downhill tracks or downhill tires to dig into the ground, which will increase the angle of the machine.

Width of tracks or tires – Narrower tracks or narrower tires further increase the digging into the ground which causes the machine to be less stable.

Implements attached to the drawbar – This may decrease the weight on the uphill tracks. This may also decrease the weight on the uphill tires. The decreased weight will cause the machine to be less stable.

Height of the working load of the machine – When the working loads are in higher positions, the stability of the machine is reduced.

Operated equipment – Be aware of performance features of the equipment in operation and the effects on machine stability.

Operating techniques – Keep all attachments or pulled loads low to the ground for optimum stability.

Machine systems have limitations on slopes – Slopes can affect the proper function and operation of the various machine systems. These machine systems are needed for machine control.

Note: Operators with lots of experience and proper equipment for specific applications are also required. Safe operation on steep slopes may also require special machine maintenance. Refer to Lubricant Viscosities and Refill Capacities in this manual for the proper fluid level requirements and intended machine use. Fluids must be at the correct levels to ensure that systems will operate properly on a slope.

i08229294

Equipment Lowering with Engine Stopped

SMCS Code: 7000-II

Before lowering any equipment with the engine stopped, clear the area around the equipment of all personnel. The procedure to use will vary with the type of equipment to be lowered. Keep in mind most systems use a high pressure fluid or air to raise or lower equipment. The procedure will cause high pressure air, hydraulic, or some other media to be released in order to lower the equipment. Wear appropriate personal protective equipment and follow the established procedure in the Operation and Maintenance Manual, “Equipment Lowering with Engine Stopped” in the Operation Section of the manual.

i08267037

Sound Information and Vibration Information

SMCS Code: 7000

Sound Level Information

The declared dynamic operator sound pressure level is 73 dB(A) when “ISO 6396: 2008” is used to measure the value for an enclosed cab. The measurement was conducted at 70% of the maximum engine cooling fan speed. The sound level may vary at different engine cooling fan speeds. The measurement was conducted with the cab doors and the cab windows closed. The cab was properly installed and maintained.

The declared sound levels listed above include both measurement uncertainty and uncertainty due to production variation.

Hearing protection may be needed when the machine is operated with an open operator station for extended periods or in a noisy environment. Hearing protection may be needed when the machine is operated with a cab that is not properly maintained, or when the doors and windows are open for extended periods or in a noisy environment.

Sound Level Information for Machines in European Union Countries and in Countries that Adopt the “EU Directives”

The declared exterior sound pressure level is 105 dB (A) when the “ISO 6395 - Dynamic Test” procedure is used to measure the value for the standard machine. The measurement was conducted at 70% of the maximum engine cooling fan speed and with the regeneration system for the engine exhaust emissions disabled. The sound level may vary at different engine cooling fan speeds.

The declared dynamic operator sound pressure level is 73 dB(A) when “ISO6396: 2008” is used to measure the value for an enclosed cab. The measurement was conducted at 70% of the maximum engine cooling fan speed and with the regeneration system for the engine exhaust emissions disabled. The sound level may vary at different engine cooling fan speeds. The measurement was conducted with the cab doors and the cab windows closed. The cab was properly installed and maintained.

The declared sound levels listed above include both measurement uncertainty and uncertainty due to production variation.

Sound Level Information for Machines in Eurasian Economic Union Countries

The declared dynamic operator sound pressure level is 73 dB(A) when “ISO 6396:2008” is used to measure the value for an enclosed cab. The measurement was conducted at 70 % of the maximum engine cooling fan speed. The sound level may vary at different engine cooling fan speeds. The measurement was conducted with the cab doors and the cab windows closed.

The declared exterior sound power level L_{WA} is 105 dB(A) when the value is measured according to the dynamic test procedures and the conditions that are specified in “ISO 6395:2008”. The measurement was conducted at 70 % of the maximum engine cooling fan speed. The sound level may vary at different engine cooling fan speeds.

The declared sound levels listed above include both measurement uncertainty and uncertainty due to production variation.

“The European Union Physical Agents (Vibration) Directive 2002/44/EC”

Vibration Data for Track Type Excavator

Information Concerning Hand/Arm Vibration Level

When the machine is operated according to the intended use, the hand/arm vibration of this machine is below 2.5 meter per second squared.

Information Concerning Whole Body Vibration Level

This section provides vibration data and a method for estimating the vibration level for track type excavators.

Note: Vibration levels are influenced by many different parameters. Many items are listed below.

- Operator training, behavior, mode, and stress
- Job site organization, preparation, environment, weather, and material
- Machine type, quality of the seat, quality of the suspension system, attachments, and condition of the equipment

It is not possible to get precise vibration levels for this machine. The expected vibration levels can be estimated with the information in Table 2 to calculate the daily vibration exposure. A simple evaluation of the machine application can be used.

Estimate the vibration levels for the three vibration directions. For typical operating conditions, use the average vibration levels as the estimated level. With an experienced operator and smooth terrain, subtract the Scenario Factors from the average vibration level to obtain the estimated vibration level. For aggressive operations and severe terrain, add the Scenario Factors to the average vibration level to obtain the estimated vibration level.

Note: All vibration levels are in meter per second squared.

Table 2

"ISO Reference Table A - Equivalent vibration levels of whole body vibration emission for earthmoving equipment."							
Machine Type	**Typical Operating Activity**	**Vibration Levels**			**Scenario Factors**		
		X axis	**Y axis**	**Z axis**	**X axis**	**Y axis**	**Z axis**
Track Type Excavators	excavating	0.44	0.27	0.30	0.24	0.16	0.17
	hydraulic breaker application	0.53	0.31	0.55	0.30	0.18	0.28
	mining application	0.65	0.42	0.61	0.21	0.15	0.32
	transfer	0.48	0.32	0.79	0.19	0.20	0.23

Note: Refer to "ISO/TR 25398 Mechanical Vibration - Guideline for the assessment of exposure to whole body vibration of ride on operated earthmoving machines" for more information about vibration. This publication uses data that is measured by international institutes, organizations, and manufacturers. This document provides information about the whole body exposure of operators of earthmoving equipment. Refer to Operation and Maintenance Manual, SEBU8257, "The European Union Physical Agents (Vibration) Directive 2002/44/EC" for more information about machine vibration levels.

The Caterpillar suspension seat meets the criteria of "ISO 7096". This represents vertical vibration level under severe operating conditions.

Guidelines for Reducing Vibration Levels on Earthmoving Equipment

Properly adjust machines. Properly maintain machines. Operate machines smoothly. Maintain the conditions of the terrain. The following guidelines can help reduce the whole body vibration level:

1. Use the right type and size of machine, equipment, and attachments.

2. Maintain machines according to the manufacturer recommendations.

a. Tire pressures

b. Brake and steering systems

c. Controls, hydraulic system, and linkages

3. Keep the terrain in good condition.

a. Remove any large rocks or obstacles.

b. Fill any ditches and holes.

c. Provide machines and schedule time to maintain the conditions of the terrain.

4. Use a seat that meets "ISO 7096". Keep the seat maintained and adjusted.

a. Adjust the seat and suspension for the weight and the size of the operator.

b. Inspect and maintain the seat suspension and adjustment mechanisms.

5. Perform the following operations smoothly.

a. Steer

b. Brake

c. Accelerate.

d. Shift the gears.

6. Move the attachments smoothly.

7. Adjust the machine speed and the route to minimize the vibration level.

a. Drive around obstacles and rough terrain.

b. Slow down when driving over rough terrain.

8. Minimize vibrations for a long work cycle or a long travel distance.

a. Use machines that are equipped with suspension systems.

b. Use the ride control system on track type excavators.

c. If no ride control system is available, reduce speed to prevent bounce.

d. Haul the machines between workplaces.

9. Less operator comfort may be caused by other risk factors. The following guidelines can be effective to provide better operator comfort:

a. Adjust the seat and adjust the controls to achieve good posture.

b. Adjust the mirrors to minimize twisted posture.

c. Provide breaks to reduce long periods of sitting.

d. Avoid jumping from the cab.

e. Minimize repeated handling of loads and lifting of loads.

f. Minimize any shocks and impacts during sports and leisure activities.

Sources

The vibration information and the calculation procedure are based on “ISO/TR 25398 Mechanical Vibration - Guideline for the assessment of exposure to whole body vibration of ride on operated earthmoving machines”. Harmonized data is measured by international institutes, organizations, and manufacturers.

This literature provides information about assessing the whole body vibration exposure of operators of earthmoving equipment. The method is based on measured vibration emission under real working conditions for all machines.

Check the original directive. This document summarizes part of the content of the applicable law. This document is not meant to substitute the original sources. Other parts of these documents are based on information from the United Kingdom Health and Safety Executive.

Refer to Operation and Maintenance Manual, SEBU8257, “The European Union Physical Agents (Vibration) Directive 2002/44/EC” for more information about vibration.

Consult your local Caterpillar dealer for more information about machine features that minimize vibration levels. Consult your local Caterpillar dealer about safe machine operation.

Use the following web site to find your local dealer:

Caterpillar, Inc.
www.cat.com

i07746362

Operator Station

SMCS Code: 7300; 7301; 7325

Any modifications to the inside of the operator station should not project into the operator space or into the space for the companion seat (if equipped). The addition of a radio, fire extinguisher, and other equipment must be installed so that the defined operator space and the space for the companion seat (if equipped) is maintained. Any item that is brought into the cab should not project into the defined operator space or the space for the companion seat (if equipped). A lunch box or other loose items must be secured. Objects must not pose an impact hazard in rough terrain or in the event of a rollover.

i07746359

Guards
(Operator Protection)

SMCS Code: 7000; 7150

There are different types of guards that are used to protect the operator. The machine and the machine application determine the type of guard that should be used.

A daily inspection of the guards is required in order to check for structures that are bent, cracked, or loose. Never operate a machine with a damaged structure.

The operator becomes exposed to a hazardous situation if the machine is used improperly or if poor operating techniques are used. This situation can occur even though a machine is equipped with an appropriate protective guard. Follow the established operating procedures that are recommended for your machine.

Rollover Protective Structure (ROPS), Falling Object Protective Structure (FOPS) or Tip Over Protection Structure (TOPS)

The ROPS/FOPS Structure (if equipped) on your machine is specifically designed, tested and certified for that machine. Any alteration or any modification to the ROPS/FOPS Structure could weaken the structure. This places the operator into an unprotected environment. Modifications or attachments that cause the machine to exceed the weight that is stamped on the certification plate also place the operator into an unprotected environment. Excessive weight may inhibit the brake performance, the steering performance and the ROPS. The protection that is offered by the ROPS/FOPS Structure will be impaired if the ROPS/FOPS Structure has structural damage. Damage to the structure can be caused by an overturn, a falling object, a collision, etc.

Do not mount items (fire extinguishers, first aid kits, work lights, etc) by welding brackets to the ROPS/FOPS Structure or by drilling holes in the ROPS/FOPS Structure. Welding brackets or drilling holes in the ROPS/FOPS Structures can weaken the structures. Consult your Cat dealer for mounting guidelines.

The Tip Over Protection Structure (TOPS) is another type of guard that is used on mini hydraulic excavators. This structure protects the operator in the event of a tipover. The same guidelines for the inspection, the maintenance and the modification of the ROPS/FOPS Structure are required for the Tip Over Protection Structure.

Other Guards (If Equipped)

Protection from flying objects and/or falling objects is required for special applications. Logging applications and demolition applications are two examples that require special protection.

A front guard needs to be installed when a work tool that creates flying objects is used. Mesh front guards that are approved by Caterpillar or polycarbonate front guards that are approved by Caterpillar are available for machines with a cab or an open canopy. On machines that are equipped with cabs, the windows should also be closed. Safety glasses are recommended when flying hazards exist for machines with cabs and machines with open canopies.

If the work material extends above the cab, top guards and front guards should be used. Typical examples of this type of application are listed below:

- Demolition applications
- Rock quarries
- Forestry products

Additional guards may be required for specific applications or work tools. The Operation and Maintenance Manual for your machine or your work tool will provide specific requirements for the guards. Refer to Operation Maintenance manual, "Demolition" for additional information. Consult your Cat dealer for additional information.

Product Information Section

General Information

i07105852

Regulatory Information (Japan)

SMCS Code: 7000

Qualifications for Machine Operation

The following qualifications are required for the operation of this machine:

Excavation and Loading

Completion of the construction machines (for land leveling, hauling, loading, and excavation) operation skill training course. (Qualification by the Industrial Safety and Health Act)

Demolition

Completion of the construction machines (for demolition) operation skill training course. (Qualification by the Industrial Safety and Health Act)

Mining Jobs

Certification by the Director General or Deputy Director General of Bureau of Mine Safety after completion of the safety training course. (Qualification by the Mine Safety Act)

Crane Slinging for the Bucket with a Hook

Completion of the special slinging training for the crane for loads weighing less than 1 ton. (Qualification by the Industrial Safety and Health Act)

Trailer Transportation

In principle, this machine should be transported by a trailer. Select the appropriate trailer regarding the machine weight and measurements shown in the major specifications in the specification part of this manual. Be aware machine weight and transportation measurements differ depending on the various types of attachments.

- In the event heavy items are to be transported, observe the related laws. These laws include Road Traffic Law, Road Laws, Road Transportation Vehicle Laws, and Vehicle Restriction Laws.
- Conduct prior investigation of the road width, ground clearance of road/railway bridges, weight restrictions etc. of the planned transportation route, to confirm the viability of the transportation execution.

Load

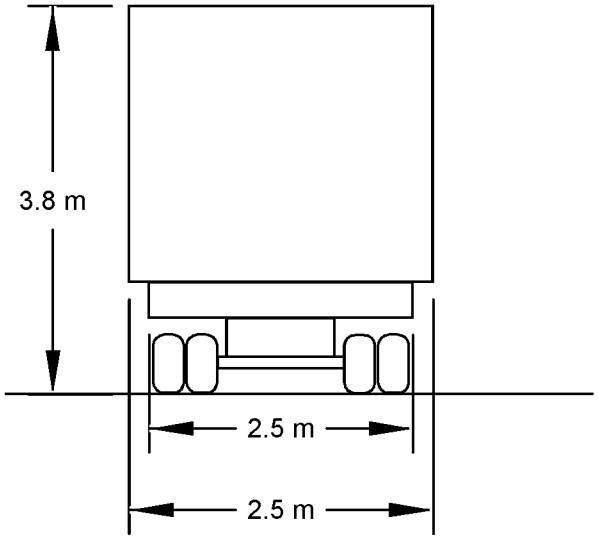

Illustration 65 g02698738

- Not more than 3.8 m (12 ft 6 inch)
- Not more than 2.5 m (8 ft 2 inch)(Safety Standard)
- Not more than 2.5 m (8 ft 2 inch) (Vehicle Restriction Laws)
- Items that protrude out are not allowed. (Government ordinance for Road Traffic Laws)

Transportation weight and measurements are restricted by the Vehicle Restriction Laws. If the actual weight/measurements exceed the limitation figures, you must submit the restriction relaxation request to the pertinent governmental agencies. For details, consult your Cat dealer.

Table 3

Total Length	Not more than 12 m (39 ft 4 inch)
Total Width (A)	Not more than 2.5 m (8 ft 2 inch)

(continued)

(Table 3, contd)

Total Height (B)	Not more than 3.8 m (12 ft 6 inch) when loaded on the trailer.
Total Weight	20 to 25 ton (depending on road, axle, and vehicle length)

Operation of Construction Equipment and the Governing Laws and Regulations

NOTICE
Various laws and regulations, including Industrial Safety and Health Act, are enforced to ensure prevention of injuries on and around construction equipment and safe and comfortable operation of equipment. Be sure to obey them.

NOTICE
The notices regarding machine operation, inspection, maintenance, and safety contained in this manual are applicable only to cases in which the machine is used for the specified jobs. It is impossible for this kind of manual to cover every kind of operation. Therefore, the content of this manual does not necessarily explain all possible cases. Be sure to pay careful attention also to the items not covered by this manual and confirm the safety before starting jobs to prevent human injury and machine damage accidents.

Qualification of Operators

Operation of construction equipment is limited to persons who have any of the following licenses by law.

Note: Employers will face imprisonment up to a maximum of 6 months or a fine of up to a maximum of five hundred thousand yen if they let unqualified personnel operate equipment. Unqualified operators will also be fined up to a maximum of five hundred thousand yen.

- One who completed an operating skill course for vehicle-type construction equipment at a registered training institution.
- One who passed the construction equipment and technologies license examination (Type 1-3) defined by the Construction Industry Law.
- One who completed an operating training course for construction equipment defined by the Vocational Training Law.
- One who took a special training (rules and skills) at a registered training institution to operate equipment weighing less than 3 tons.
- With an auto-drivers license, an operator does not need to complete an operating skill course for construction equipment to operate equipment on the roads that apply to the rules of the Road Traffic Act. However, the operator needs to complete the course to engage in snow clearing or excavating on the roads.
- The operator must be qualified under the Mine Safety Act to operate construction equipment in a mine.

Acquisition of the Qualifications

The company offers training courses for construction machine operation, in addition to other skills. For details, contact the company's dealer in your area.

Regarding machine operation qualifications, also refer to the laws related to the construction machines shown at the end of this manual.

Subsidy System

Small-to-medium-sized construction business companies are eligible to receive a subsidy for a part of training fees and wages when they have their employees attend a training course to improve skills.

Operation of Construction Equipment and the Governing Laws and Regulations

NOTICE
Information about operating skill course for vehicle-type construction equipment (for ground leveling, transporting, loading, excavating).

Industrial Safety and Health Act requires operators of construction equipment weight 3 tons and over to acquire a certificate of completion of an operating skill course. Registered with and authorized by the respective directors general of the regional labor bureaus, we offer operating skill courses for vehicle-type construction equipment and special trainings.

Request for Periodical Self-Inspection

Rules of Periodical Self-Inspection

The employer shall, as provided for by the Ordinance of the Ministry of Health, Labor and Welfare, conduct self-inspection periodically. The employer shall keep the records of the results in respect to construction equipment such as tractor shovels and power shovels, etc., specified by Cabinet Order. (from Article 45, Industrial Safe and Health Act)

Ordinance on Industrial Safety and Hygiene

Periodical self-inspections Article 167

(1) The employer shall, as regards a vehicle type construction machine, carry out self-inspections for the following matters periodically once every period within a year. However, this shall not apply to the non-use period of a vehicle type construction machine, which is not used for a period exceeding 1 year.

(2) The employer shall, as regards a vehicle type construction machine set forth in the proviso of the proceeding paragraph, carry out self-inspection for abnormalities in each part of a construction machine before resuming the operation.

Periodical self-inspections Article 168

(1) The employer shall, as regards a vehicle type construction machine, carry out self-inspections for the following matters periodically once every period within a month. However, this shall not apply to the non-use period of a vehicle type construction machine, which is not used for a period exceeding one month:

- (i) Abnormalities in a brake, a clutch, a controlling device, and working devices.
- (ii) Damage in a wire, rope, and a chain
- (iii) Damage in a bucket, a dipper, etc.

(2) The employer shall, as regards to the vehicle type construction machine set forth in the proviso of the preceding paragraph, carry out self-inspection for the matters listed in each item of the same paragraph before resuming the operation.

Record of Periodical Self-Inspections Article 169

The employer shall, when having carried out the self-inspections set forth in the preceding two Articles, record the results and retain the records for 3 years.

Specified Self-Inspection Article 169-2

The specified self-inspection pertaining to the vehicle type construction machine shall be the self-inspection (prescribed by Article 167) and carried out by qualified personnel. The employer shall, when having carried out the specified self-inspection pertaining to a vehicle type construction machine, affix an inspection sticker stating the month and year when the said specified self-inspection was carried out at a readily visible location of the said machine.

- Caterpillar Japan has a supporting program for self-inspection as a registered inspection agency. Qualified personnel and inspection equipment are available to help customers who do not conduct internal inspections or do not have time to conduct the specified self-inspections. Contact a Cat dealer near you for details.
- Maintenance and inspection record book for a record-saving purpose can be purchased at Caterpillar Japan.
- Penalty: Employer who fails to carry out self-inspections and to record the results will face a fine of up to five hundred thousand yen.

Checkup before Commencing the Work Article 170

The employer shall, when carrying out the work using a vehicle type construction machine, check functions of a brake and a clutch before commencing the work for the day.

Other Rules

Besides qualification for operating equipment and self inspections, the following obligations are set forth in the Industrial Safety and Health Act:

- To conduct health and safety training for new recruits and shop foremen.
- To appoint the operation leader or supervisor, and establish health and safety management system.
- To inform employees of a chain of command at the worksite, communication and signal rules, traveling route of equipment, speed limits, signs of restricted areas, etc. for securing safety in the workplace.

The Industrial Safety and Health Act further also set obligations related to mechanical structures and rental activities of equipment.

Safety comes before anything else. Establish a workplace where no injuries occur by observing the governing laws and by referring to this manual, specifically the descriptions on safety.

Construction Equipment and Environmental Laws

Prohibition of Emissions and Obligations to Recover Fluorocarbons

Law Concerning the Recovery and Destruction of Fluorocarbons (Enforcement date: April 1, 2015)

Being emitted into the atmosphere, Fluorocarbons, used as refrigerants of air conditioning, destroy the ozone layer and accelerate the global warming as a cause of environmental destruction. Follow the instructions below required by law when handling air conditioners to protect the global environment.

1. 1. Do not arbitrarily emit the encapsulated refrigerant installed on the product into the atmosphere.
2. 2. Recover the encapsulated refrigerant when disposing of the product.

Note: Violators of the law will face a maximum one-year imprisonment or a fine up to a maximum of five hundred thousand yen.

When you need to fill, recover a refrigerant or dispose of a product with an encapsulated refrigerant installed, please ask a filling-recovery operator registered with the government of the local prefecture as "class-1 filling-recovery operator." And carry out the simple inspection of air conditioner and keep the record.

Class-1 Specified products sold after October 1, 2015 shall have the label inside of the cab showing the type and quantity of refrigerant, GWP (Global Warming Potential), and precautions for use. (Refer to the fluorocarbon label in the OMM safety section)

Standard Certificate of Transfer

Dear Customers

Japan Construction Equipment Manufacturers Association

Standard Certificate of Transfer

Issued by the Japan Construction Equipment Manufacturers Association

Standard Certificate of Transfer issued by the Japan Construction Equipment Manufacturers Association proves the ownership of your equipment. Request us to issue the certificate as a proof of transfer of ownership.

Commercial transactions of construction equipment are generally made on a long-term installment plan basis with a special provision of reservation of ownership that the seller retains the ownership of the sold equipment until the buyer completely pays off the installments.

Ownership of some construction equipment can be proved with a vehicle inspection certificate, but the certificate is not issued for most of the equipment. Therefore, the buyer will need to present a third party with a proof of ownership of the sold equipment.

Japan Construction Equipment Manufacturers Association launched a system of standard certificate of transfer in 1971 to normalize trading in construction equipment and establishes a business practice relating to transfer of ownership. Customers are kindly requested to understand the intent of the system and request your seller to issue a certificate of transfer.

1. About the standard certificate of transfer
   a. Japan Construction Equipment Manufacturers Association (hereinafter referred to as CEMA) sets the rules and form of standard certificate of transfer (hereinafter referred to as certificate of transfer), and members of the CEMA issue the certificate of transfer. A certificate of transfer proves the ownership of equipment.
2. Purpose of issuance
   a. A certificate of transfer will be issued for the purpose of clarifying the ownership of equipment and preventing misconduct such as trades of stolen equipment or fraud.
3. Issuer
   a. A certificate of transfer will be issued by a distributor (Primary transferer) who sells new construction equipment and is authorized by the CEMA.
4. Eligibility
   a. A certificate of transfer will be issued for the equipment, which is sold by CEMA-member distributors and defined as construction equipment by the CEMA
5. Issuance
   a. A certificate of transfer will be issued and directly given to a buyer upon the buyer's request when he/she buys eligible equipment from an issuer.
   b. A certificate of transfer may not be issued for the equipment, which was sold as new merchandise more than 10 years ago.
   c. A certificate of transfer is not permitted to substitute a vehicle inspection certificate.
6. Prohibition of reissuance
   a. Certificate of transfer should be safely stored as it will not be reissued under any circumstances.

7. In case a certificate description runs out of space

a. Discretionary page/s to the certificate will be valid with a tally seal of the issuer at the joint of two pages.

Contact CEMA-member companies or distributors for more details of the system.

Industrial Safety and Health Act

Article 164 (Extracted) of Industrial Safety and Health Act (Restriction on use Other Than Main Application)

Article 164

Business Operator must not use construction machineries of vehicle type for applications other than main application of the applicable construction machineries of vehicle type such as: lifting cargos by hydraulic excavator or lifting/lowering workers using the clamshell.

[2] The previous clause will not be applied for any of the following cases:

1. In performing cargo lifting, any one of the following may be applicable.

a. Cannot be avoided due to the nature of the work or necessary in view of performing work in safe.

b. When working with attachments installed for metals of hook or shackle etc or other devices for lifting application applicable to any one of the following as implements for boom or bucket etc

- Enough strength is retained bearable for loads to be applied.
- Load lifted up is not feared to be dropped from the applicable instrument used, due to provided locking device is in use or etc.
- Load not feared of disengaging from the implement.

2. In performing work other than cargo lifting, nothing is feared to do harm to the workers.

[3] The business operator must take the following measures, in performing cargo lifting work applicable to Items 1a and 1b of Step 1 above. To prevent any danger of workers from contact with lifted cargo, drop of lifted cargo or turnover or falling down of construction machineries of vehicle type.

1. Designate one person who issues a sign as well as setting up fixed signs related to cargo lifting work, and follow his signs.

2. Perform work on a flat ground.

3. Keep any worker away from any place where is feared to cause any danger to worker due to contact with a cargo or drop of lifted cargo.

[4] Do not perform any work applying load exceeding the allowed rated max load specified according to structure or materials of the applicable construction machineries of the vehicle type.

[5] In using wire rope in slinging device, use wire rope applicable to every item of the followings.

- Safety coefficient is 6 or more. (The safety coefficient here must be the same as specified in Article 213 item 2 in Safety Rules on Crane Works (Article 34 in Ordinance of Ministry of Labor, 1972) etc. Hereinafter called as "Crane Rules")
- Among wire rope 1 strands, numbers of cut strands (other than filler) are less than 10%.
- Reduction of diameter is 7% or less than nominal diameter.
- Free from kinking.
- Free from badly collapse and corrosion.

[6] In using lifting chain as slinging device, the chain is applicable to every item of the followings.

- Safety coefficient is 5 or more.
- Elongation is 5% or less than the length when the applicable lifting chain was fabricated.
- Reduction of diameter of the cross section of link is 10% or less than diameter of cross section of the applicable link when the applicable lifting chain was manufactured.
- Free from cracks.

[7] In using those other than wire rope and lifting chain as slinging device, they must be free from bad damage and corrosion.

i08267041

Specifications

SMCS Code: 7000

Intended Use

The intended use of this machine is for excavating with a bucket or working with approved work tools. The machine should be operated with the undercarriage in a stationary position since the upper structure is normally capable of 360 degree swing with mounted equipment. This machine can be used in object handling applications that are within the lift capacity of the machine. When this machine is used in object handling applications, ensure that the machine is properly configured and operated properly. Obey any local governmental regulations and regional governmental regulations. Only lift objects from approved lifting points and with approved lifting devices.

Expected Life

The expected life, defined as total machine hours, of this machine is dependent upon many factors including the machine owner desire to rebuild the machine back to factory specifications. The expected life interval of this machine is 10,000 service hours. The expected life interval corresponds to the service hours to engine overhaul or replacement. Service hours to engine overhaul or replacement may vary based on overall machine duty cycle. At the expected life interval, remove the machine from operation and consult your Cat ® dealer for inspect, repair, rebuild, install remanufactured, install new components, or disposal options and to establish a new expected life interval. If a decision is made to remove this machine from service, refer to Operation and Maintenance Manual, “Decommissioning and Disposal”.

The following items are required to obtain an economical expected life of this machine:

- Perform regular preventive maintenance procedures as described in the Operation and Maintenance Manual.
- Perform machine inspections as described in the Operation and Maintenance Manual and correct any problems discovered.
- Perform system testing as described in the Operation and Maintenance Manual and correct any problems discovered.
- Ensure that machine application conditions comply with Caterpillar recommendations.
- Ensure that the operating weight does not exceed limits set by manufacturer.
- Ensure that all frame cracks are identified, inspected, and repaired to prevent further development.

Application/Configuration Restrictions

The maximum travel operating slope for machine lubrication is 35 degrees.

The operator station is ROPS certified up to a mass of 42800 kg (94360 lb) per “ISO 12117-2:2008”.

Specification Data

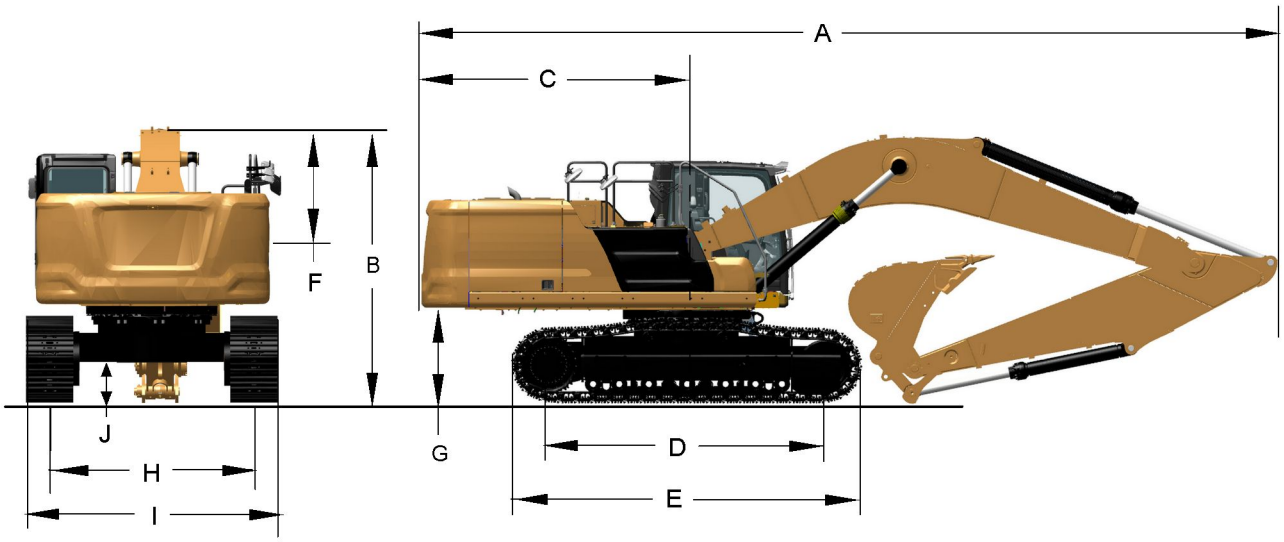

Illustration 66 g06283423

Table 4

336 Excavators				
Boom	**6.5 m (21 ft 4 inch) Reach Boom**			**6.18 m (20 ft 3 inch) Mass Boom**
Stick	**2.8 m (9 ft 2 inch)**	**3.2 m (10 ft 6 inch)**	**3.9 m (12 ft 10 inch)**	**2.55 m (8 ft 4 inch)**
Bucket	**2.27 m^3 (2.97 $yd)^3$**	**2.27 m^3 (2.97 $yd)^3$**	**2.27 m^3 (2.97 $yd)^3$**	**2.41 m^3 (3.15 $yd)^3$**
Approximate Weight(1)	36900 kg (81400 lb)	36900 kg (81400 lb)	36900 kg (81400 lb)	36900 kg (81400 lb)
Overall Length (A)	11220 mm (36 ft 8 inch)	11170 mm (36 ft 6 inch)	11200 mm (36 ft 7 inch)	10890 mm (35 ft 7 inch)
Overall Height (B)	3670 mm (12 ft 0 inch)	3520 mm (11 ft 5 inch)	3720 mm (12 ft 2 inch)	3620 mm (11 ft 8 inch)
Swing Radius (C)	3530 mm (11 ft 6inch)	3530 mm (11 ft 6inch)	3530 mm (11 ft 6inch)	3530 mm (11 ft 6inch)
Length to Center of Rollers (D)	Long: 4040 mm (13 ft 3 inch) Standard: 3610 mm (11 ft 8 inch)	Long: 4040 mm (13 ft 3 inch) Standard: 3610 mm (11 ft 8 inch)	Long: 4040 mm (13 ft 3 inch) Standard: 3610 mm (11 ft 8 inch)	Long: 4040 mm (13 ft 3 inch) Standard: 3610 mm (11 ft 8 inch)
Length of Track (E)	Long: 5020 mm (16 ft 6 inch) Standard: 4590 mm (15 ft 1 inch)	Long: 5020 mm (16 ft 6 inch) Standard: 4590 mm (15 ft 1 inch)	Long: 5020 mm (16 ft 6 inch) Standard: 4590 mm (15 ft 1 inch)	Long: 5020 mm (16 ft 6 inch) Standard: 4590 mm (15 ft 1 inch)
Handrail Height (F)	3160 mm (10 ft 4 inch)	3160 mm (10 ft 4 inch)	3160 mm (10 ft 4 inch)	3160 mm (10 ft 4 inch)

(continued)

(Table 4, contd)

336 Excavators				
Boom	**6.5 m (21 ft 4 inch) Reach Boom**			**6.18 m (20 ft 3 inch) Mass Boom**
Stick	**2.8 m (9 ft 2 inch)**	**3.2 m (10 ft 6 inch)**	**3.9 m (12 ft 10 inch)**	**2.55 m (8 ft 4 inch)**
Bucket	**2.27 m^3 (2.97 $yd)^3$**	**2.27 m^3 (2.97 $yd)^3$**	**2.27 m^3 (2.97 $yd)^3$**	**2.41 m^3 (3.15 $yd)^3$**
Counterweight Clearance (G)	1250 mm (4 ft 1 inch)	1250 mm (4 ft 1 inch)	1250 mm (4 ft 1 inch)	1250 mm (4 ft 1 inch)
Track Gauge (H) (Long Under Carriage)	2590 mm (8 ft 5 inch)	2590 mm (8 ft 5 inch)	2590 mm (8 ft 5 inch)	2590 mm (8 ft 5 inch)
Track Gauge (H) (Long Narrow Under Carriage)	2390 mm (7 ft 8 inch)	2390 mm (7 ft 8 inch)	2390 mm (7 ft 8 inch)	2390 mm (7 ft 8 inch)
Overall Width (I) with 600 mm (24 inch) Shoe (Long Under Carriage)	3190 mm (10 ft 5 inch)	3190 mm (10 ft 5 inch)	3190 mm (10 ft 5 inch)	3190 mm (10 ft 5 inch)
Overall Width (I) with 700 mm (28 inch) Shoe (Long Under Carriage)	3290 mm (10 ft 8 inch)	3290 mm (10 ft 8 inch)	3290 mm (10 ft 8 inch)	3290 mm (10 ft 8 inch)
Overall Width (I) with 800 mm (31 inch) Shoe (Long Under Carriage)	3390 mm (11 ft 1 inch)	3390 mm (11 ft 1 inch)	3390 mm (11 ft 1 inch)	3390 mm (11 ft 1 inch)
Overall Width (I) with 850 mm (33 inch) Shoe (Long Under Carriage)	3440 mm (11 ft 3 inch)	3440 mm (11 ft 3 inch)	3440 mm (11 ft 3 inch)	3440 mm (11 ft 3 inch)
Overall Width (I) with 600 mm (24 inch) Shoe (Long Narrow Under Carriage)	2990 mm (9 ft 8 inch)	2990 mm (9 ft 8 inch)	2990 mm (9 ft 8 inch)	2990 mm (9 ft 8 inch)
Overall Width (I) with 700 mm (28 inch) Shoe (Long Narrow Under Carriage)	3090 mm (10 ft 1 inch)	3090 mm (10 ft 1 inch)	3090 mm (10 ft 1 inch)	3090 mm (10 ft 1 inch)
Ground Clearance (J)	510 mm (1 ft 7 inch)	510 mm (1 ft 7 inch)	510 mm (1 ft 7 inch)	510 mm (1 ft 7 inch)

(1) 10 percent full fuel tank.

Working Ranges

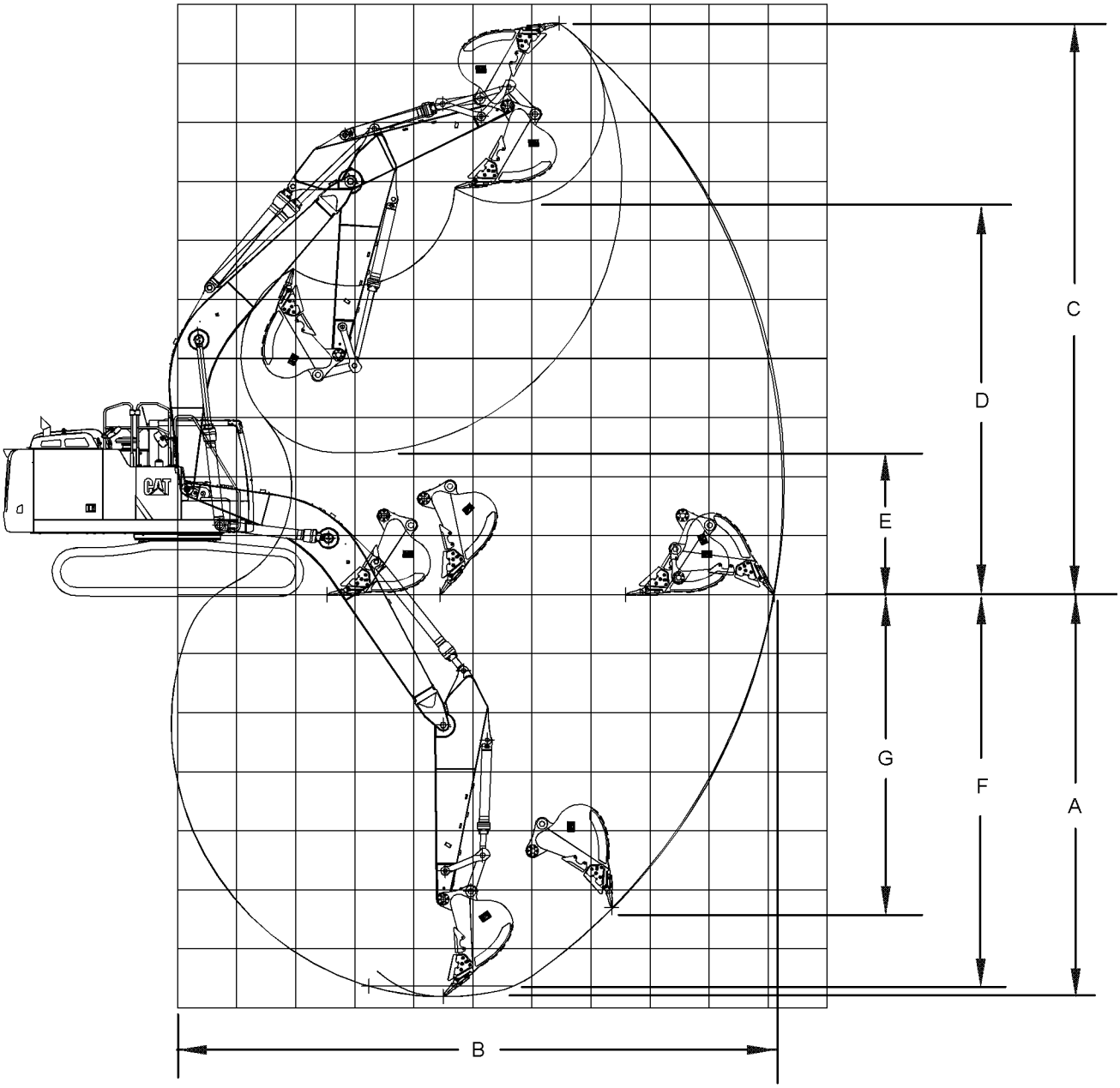

Illustration 67 g02151731

Table 5

336 Excavators				
	6.5 m (21 ft 4 inch) Reach Boom			6.18 m (20 ft 3 inch) Mass Boom
	2.8 m (9 ft 2 inch) Stick	3.2 m (10 ft 6 inch) stick	3.9 m (12 ft 10 inch) Stick	2.55 m (8 ft 4 inch) Stick
Bucket	2.27 m^3 (2.97 $yd)^3$	2.27 m^3 (2.97 $yd)^3$	2.27 m^3 (2.97 $yd)^3$	2.41 m^3 (3.15 $yd)^3$
Maximum Digging Depth (A)	7100 mm (23 ft 3 inch)	7500 mm (24 ft 6 inch)	8200 mm (26 ft 9 inch)	6670 mm (21 ft 9 inch)
Maximum Reach at Ground Level (B)	10730 mm (35 ft 2 inch)	11030 mm (36 ft 2 inch)	11730 mm (38 ft 5 inch)	10280 mm (38 ft 7 inch)
Maximum Cutting Height (C)	10380 mm (34 ft 1 inch)	10320 mm (33 ft 9 inch)	10740 mm (35 ft 2 inch)	10030 mm (32 ft 9 inch)
Maximum Loading Height (D)	7190 mm (23 ft 6 inch)	7190 mm (23 ft 6 inch)	7490 mm (24 ft 6 inch)	6690 mm (21 ft 9 inch)
Minimum Loading Height (E)	3090 mm (10 ft 1 inch)	2690 mm (8 ft 8 inch)	1990 mm (6 ft 5 inch)	3000 mm (9 ft 8 inch)
Maximum Cut Depth (F)(1)	6930 mm (22 ft 7 inch)	7340 mm (24 ft 1 inch)	8060 mm (26 ft 4 inch)	6490 mm (21 ft 3 inch)
Maximum Digging Depth (Vertical wall) (G)	6060 mm (19 ft 9 inch)	6130 mm (20 ft 1 inch)	6950 mm (20 ft 9 inch)	5070 mm (16 ft 6 inch)

(1) 2440 mm (8 ft) level bottom

i07380484

Boom/Stick/Bucket Combinations

SMCS Code: 6000; 6700

This machine can be equipped with a large variety of boom-stick-bucket combinations in order to meet the needs of various applications.

Buckets are grouped into families according to the capacity of the bucket. Generally, use a bucket with a smaller capacity when you are using a longer stick and/or a longer boom. Conversely, use a bucket with a larger capacity when you are using a shorter stick and/or a shorter boom. This rule ensures better machine stability and protection against structural machine damage.

A stick is designed to match only one specific family of buckets.

Note: The selection of a compatible boom-stick-bucket combination is a guide. Work tools, uneven ground conditions, soft ground conditions, or poor ground conditions have effects on machine performance. The operator is responsible for being aware of these effects.

Consult your Cat dealer for information on selecting the correct boom-stick-bucket combination.

The following tables show various compatible boom-stick-bucket combinations. Select an optimum combination according to the working conditions and according to the type of work that is being done.

Table 6

336 and 336 GC Excavators without a quick coupler										
Bucket Type	**Linkage**	**Width of Bucket**	**Capacity of Bucket**	**Weight of Bucket**	**Fill (%)**	**6.5 m (21 ft 4 inch) Reach Boom(1)**		**6.5 m (21 ft 4 inch) Extreme Service Reach Boom(2)**		**6.18 m (20 ft 3 inch) Mass Boom(1)**
						3.2 m (10 ft 6 inch) Stick	**3.9 m (12 ft 10 inch) Stick**	**3.2 m (10 ft 6 inch) ES Stick**	**3.9 m (12 ft 10 inch) ES Stick**	**2.55 m (8 ft 4 inch) Stick**
General Duty (GD)	DB	750 mm (30 inch)	0.94 m^3 (1.23 yd^3)	952 kg (2099 lb)	100	(3)	(3)	(3)	(3)	
		900 mm (36 inch)	1.19 m^3 (1.56 yd^3)	1040 kg (2292 lb)		(3)	(3)	(3)	(3)	
		1050 mm (42 inch)	1.46 m^3 (1.91 yd^3)	1147 kg (2528 lb)		(3)	(3)	(3)	(3)	
		1200 mm (48 inch)	1.73 m^3 (2.26 yd^3)	1232 kg (2716 lb)		(3)	(4)	(3)	(4)	
		1350 mm (54 inch)	2.00 m^3 (2.62 yd^3)	1342 kg (2957 lb)		(4)	(5)	(4)	(5)	
		1500 mm (60 inch)	2.27 m^3 (2.98 yd^3)	1451 kg (3197 lb)		(5)	(6)	(5)	(6)	
		1650 mm (66 inch)	2.55 m^3 (3.33 yd^3)	1536 kg (3386 lb)				(5)	(6)	

(1) Equipped with a 6800 kg (14991 lb) counterweight and 850 mm (33 inch) track shoes
(2) Equipped with a 7560 kg (16667 lb) counterweight and 850 mm (33 inch) track shoes
(3) 2100 kg/m^3 (3500 lb/yd^3) is the maximum density of material.
(4) 1800 kg/m^3 (3000 lb/yd^3) is the maximum density of material.
(5) 1500 kg/m^3 (2500 lb/yd^3) is the maximum density of material.
(6) 1200 kg/m^3 (2000 lb/yd^3) is the maximum density of material.

Table 7

336 and 336 GC Excavators without a quick coupler										
Bucket Type	**Linkage**	**Width of Bucket**	**Capacity of Bucket**	**Weight of Bucket**	**Fill (%)**	**6.5 m (21 ft 4 inch) Reach Boom(1)**		**6.5 m (21 ft 4 inch) Extreme Service Reach Boom(2)**		**6.18 m (20 ft 3 inch) Mass Boom(1)**
						3.2 m (10 ft 6 inch) Stick	**3.9 m (12 ft 10 inch) Stick**	**3.2 m (10 ft 6 inch) ES Stick**	**3.9 m (12 ft 10 inch) ES Stick**	**2.55 m (8 ft 4 inch) Stick**
Heavy Duty (HD)	DB	750 mm (30 inch)	0.73 m^3 (0.95 yd^3)	1031 kg (2273 lb)	100	(3)	(3)	(3)	(3)	
		900 mm (36 inch)	0.95 m^3 (1.24 yd^3)	1178 kg (2595 lb)		(3)	(3)	(3)	(3)	
		1050 mm (42 inch)	1.17 m^3 (1.54 yd^3)	1267 kg (2793 lb)		(3)	(3)	(3)	(3)	
		1200 mm (48 inch)	1.40 m^3 (1.84 yd^3)	1398 kg (3080 lb)		(3)	(3)	(3)	(3)	

(continued)

(Table 7, contd)

		1350 mm (54 inch)	1.64 m³ (2.14 yd³)	1459 kg (3215 lb)		(3)	(4)	(3)	(4)	
		1500 mm (60 inch)	1.88 m³ (2.48 yd³)	1566 kg (3452 lb)		(4)	(5)	(3)	(5)	
		1650 mm (66 inch)	2.12 m³ (2.77 yd³)	1697 kg (3740 lb)				(4)	(6)	
		1800 mm (72 inch)	2.36 m³ (3.08 yd³)	1851 kg (4080 lb)				(5)	(6)	
	TB	1800 mm (71 inch)	2.69 m³ (3.52 yd³)	2423 kg (5340 lb)						(6)

(1) Equipped with a 6800 kg (14991 lb) counterweight and 850 mm (33 inch) track shoes
(2) Equipped with a 7560 kg (16667 lb) counterweight and 850 mm (33 inch) track shoes
(3) 2100 kg/m³ (3500 lb/yd³) is the maximum density of material.
(4) 1800 kg/m³ (3000 lb/yd³) is the maximum density of material.
(5) 1500 kg/m³ (2500 lb/yd³) is the maximum density of material.
(6) 1200 kg/m³ (2000 lb/yd³) is the maximum density of material.

Table 8

336 and 336 GC Excavators without a quick coupler										
Bucket Type	**Linkage**	**Width of Bucket**	**Capacity of Bucket**	**Weight of Bucket**	**Fill (%)**	**6.5 m (21 ft 4 inch) Reach Boom(1)**		**6.5 m (21 ft 4 inch) Extreme Service Reach Boom(2)**		**6.18 m (20 ft 3 inch) Mass Boom(1)**
						3.2 m (10 ft 6 inch) Stick	**3.9 m (12 ft 10 inch) Stick**	**3.2 m (10 ft 6 inch) ES Stick**	**3.9 m (12 ft 10 inch) ES Stick**	**2.55 m (8 ft 4 inch) Stick**
Severe Duty (SD)	DB	750 mm (30 inch)	0.73 m³ (0.95 yd³)	1096 kg (2415 lb)	90	(3)	(3)	(3)	(3)	
		900 mm (36 inch)	0.95 m³ (1.24 yd³)	1252 kg (2760 lb)		(3)	(3)	(3)	(3)	
		1050 mm (42 inch)	1.17 m³ (1.54 yd³)	1353 kg (2981 lb)		(3)	(3)	(3)	(3)	
		1200 mm (48 inch)	1.40 m³ (1.84 yd³)	1493 kg (3292 lb)		(3)	(3)	(3)	(3)	
		1350 mm (54 inch)	1.64 m³ (2.14 yd³)	1599 kg (3524 lb)		(3)	(4)	(3)	(3)	

(1) Equipped with a 6800 kg (14991 lb) counterweight and 850 mm (33 inch) track shoes
(2) Equipped with a 7560 kg (16667 lb) counterweight and 850 mm (33 inch) track shoes
(3) 2100 kg/m³ (3500 lb/yd³) is the maximum density of material.
(4) 1800 kg/m³ (3000 lb/yd³) is the maximum density of material.

Table 9

336 and 336 GC Excavators with a center lock quick coupler								
Bucket Type	**Linkage**	**Width of Bucket**	**Capacity of Bucket**	**Weight of Bucket**	**Fill (%)**	**6.5 m (21 ft 4 inch) Reach Boom(1)**	**6.5 m (21 ft 4 inch) Extreme Service Reach Boom(2)**	**6.18 m (20 ft 3 inch) Mass Boom(1)**

(continued)

(Table 9, contd)

						3.2 m (10 ft 6 inch) Stick	3.9 m (12 ft 10 inch) Stick	3.2 m (10 ft 6 inch) ES Stick	3.9 m (12 ft 10 inch) ES Stick	2.55 m (8 ft 4 inch) Stick
General Duty (GD)	DB	750 mm (30 inch)	0.94 m³ (1.23 yd³)	952 kg (2099 lb)	100	(3)	(3)	(3)	(3)	
		900 mm (36 inch)	1.19 m³ (1.56 yd³)	1040 kg (2292 lb)		(3)	(3)	(3)	(3)	
		1050 mm (42 inch)	1.46 m³ (1.91 yd³)	1147 kg (2528 lb)		(3)	(4)	(3)	(4)	
		1200 mm (48 inch)	1.73 m³ (2.26 yd³)	1232 kg (2716 lb)		(4)	(5)	(3)	(5)	
		1350 mm (54 inch)	2.00 m³ (2.62 yd³)	1342 kg (2957 lb)		(4)	(6)	(4)	(5)	
		1500 mm (60 inch)	2.27 m³ (2.98 yd³)	1451 kg (3197 lb)		(6)	(7)	(5)	(7)	
		1650 mm (66 inch)	2.55 m³ (3.33 yd³)	1536 kg (3386 lb)				(6)	(7)	

(1) Equipped with a 6800 kg (14991 lb) counterweight and 850 mm (33 inch) track shoes
(2) Equipped with a 7560 kg (16667 lb) counterweight and 850 mm (33 inch) track shoes
(3) 2100 kg/m³ (3500 lb/yd³) is the maximum density of material.
(4) 1800 kg/m³ (3000 lb/yd³) is the maximum density of material.
(5) 1500 kg/m³ (2500 lb/yd³) is the maximum density of material.
(6) 1200 kg/m³ (2000 lb/yd³) is the maximum density of material.
(7) 900 kg/m³ (1500 lb/yd³) is the maximum density of material.

Table 10

336 and 336 GC Excavators with a center lock quick coupler										
Bucket Type	**Linkage**	**Width of Bucket**	**Capacity of Bucket**	**Weight of Bucket**	**Fill (%)**	**6.5 m (21 ft 4 inch) Reach Boom(1)**		**6.5 m (21 ft 4 inch) Extreme Service Reach Boom(2)**		**6.18 m (20 ft 3 inch) Mass Boom(1)**
						3.2 m (10 ft 6 inch) Stick	**3.9 m (12 ft 10 inch) Stick**	**3.2 m (10 ft 6 inch) ES Stick**	**3.9 m (12 ft 10 inch) ES Stick**	**2.55 m (8 ft 4 inch) Stick**
Heavy Duty (HD)	DB	750 mm (30 inch)	0.73 m³ (0.95 yd³)	1031 kg (2273 lb)	100	(3)	(3)	(3)	(3)	
		900 mm (36 inch)	0.95 m³ (1.24 yd³)	1178 kg (2595 lb)		(3)	(3)	(3)	(3)	
		1050 mm (42 inch)	1.17 m³ (1.54 yd³)	1267 kg (2793 lb)		(3)	(3)	(3)	(3)	
		1200 mm (48 inch)	1.40 m³ (1.84 yd³)	1398 kg (3080 lb)		(3)	(4)	(3)	(4)	
		1350 mm (54 inch)	1.64 m³ (2.14 yd³)	1459 kg (3215 lb)		(4)	(5)	(3)	(5)	
		1500 mm (60 inch)	1.88 m³ (2.48 yd³)	1566 kg (3452 lb)		(5)	(6)	(5)	(6)	
		1650 mm (66 inch)	2.12 m³ (2.77 yd³)	1697 kg (3740 lb)				(5)	(7)	

(continued)

(Table 10, contd)

		1800 mm (72 inch)	2.36 m³ (3.08 yd³)	1851 kg (4080 lb)				(6)	(7)	
	TB	1800 mm (71 inch)	2.69 m³ (3.52 yd³)	2423 kg (5340 lb)						(7)

(1) Equipped with a 6800 kg (14991 lb) counterweight and 850 mm (33 inch) track shoes
(2) Equipped with a 7560 kg (16667 lb) counterweight and 850 mm (33 inch) track shoes
(3) 2100 kg/m³ (3500 lb/yd³) is the maximum density of material.
(4) 1800 kg/m³ (3000 lb/yd³) is the maximum density of material.
(5) 1500 kg/m³ (2500 lb/yd³) is the maximum density of material.
(6) 1200 kg/m³ (2000 lb/yd³) is the maximum density of material.
(7) 900 kg/m³ (1500 lb/yd³) is the maximum density of material.

Table 11

336 and 336 GC Excavators with a center lock quick coupler										
Bucket Type	**Linkage**	**Width of Bucket**	**Capacity of Bucket**	**Weight of Bucket**	**Fill (%)**	**6.5 m (21 ft 4 inch) Reach Boom(1)**		**6.5 m (21 ft 4 inch) Extreme Service Reach Boom(2)**		**6.18 m (20 ft 3 inch) Mass Boom(1)**
						3.2 m (10 ft 6 inch) Stick	**3.9 m (12 ft 10 inch) Stick**	**3.2 m (10 ft 6 inch) ES Stick**	**3.9 m (12 ft 10 inch) ES Stick**	**2.55 m (8 ft 4 inch) Stick**
Severe Duty (SD)	DB	750 mm (30 inch)	0.73 m³ (0.95 yd³)	1096 kg (2415 lb)	90	(3)	(3)	(3)	(3)	
		900 mm (36 inch)	0.95 m³ (1.24 yd³)	1252 kg (2760 lb)		(3)	(3)	(3)	(3)	
		1050 mm (42 inch)	1.17 m³ (1.54 yd³)	1353 kg (2981 lb)		(3)	(3)	(3)	(3)	
		1200 mm (48 inch)	1.40 m³ (1.84 yd³)	1493 kg (3292 lb)		(3)	(4)	(3)	(3)	
		1350 mm (54 inch)	1.64 m³ (2.14 yd³)	1599 kg (3524 lb)		(4)		(3)	(3)	

(1) Equipped with a 6800 kg (14991 lb) counterweight and 850 mm (33 inch) track shoes
(2) Equipped with a 7560 kg (16667 lb) counterweight and 850 mm (33 inch) track shoes
(3) 2100 kg/m³ (3500 lb/yd³) is the maximum density of material.
(4) 1800 kg/m³ (3000 lb/yd³) is the maximum density of material.

Table 12

336 and 336 GC Excavators without a quick coupler(1)										
Bucket Type	**Linkage**	**Width of Bucket**	**Capacity of Bucket**	**Weight of Bucket**	**Fill (%)**	**6.5 m (21 ft 4 inch) Reach Boom**		**6.5 m (21 ft 4 inch) Extreme Service Reach Boom**	**6.18 m (20 ft 3 inch) Mass Boom**	
						2.8 m (9 ft 2 inch) Stick	**3.2 m (10 ft 6 inch) Stick**	**3.2 m (10 ft 6 inch) ES Stick**	**2.15 m (7 ft 1 inch) ES Stick**	**2.55 m (8 ft 4 inch) Stick**
General Duty (GD)	DB	1350 mm (54 inch)	1.64 m³ (1.23 yd³)	1173 kg (2586 lb)	100	(2)	(2)	(2)		

(continued)

(Table 12, contd)

		1650 mm (66 inch)	2.11 m³ (2.76 yd³)	1352 kg (2981 lb)				(5)		
		1800 mm (71 inch)	2.35 m³ (3.07 yd³)	1453 kg (3203 lb)				(3)		
	TB	1500 mm (60 inch)	2.14 m³ (2.80 yd³)	1872 kg (4127 lb)					(2)	(4)
		1650 mm (66 inch)	2.41 m³ (3.15 yd³)	2027 kg (4469 lb)					(4)	(5)
Heavy Duty (HD)	DB	1350 mm (54 inch)	1.64 m³ (2.14 yd³)	1481 kg (3265 lb)		(2)	(2)	(4)		
		1500 mm (60 inch)	1.88 m³ (2.48 yd³)	1600 kg (3527 lb)		(4)	(4)	(5)		
		1650 mm (66 inch)	2.12 m³ (2.77 yd³)	1730 kg (3814 lb)				(3)		
	TB	1650 mm (66 inch)	2.41 m³ (3.15 yd³)	2210 kg (4872 lb)					(5)	(5)
Severe Duty (SD)	DB	1650 mm (66 inch)	2.14 m³ (2.80 yd³)	1827 kg (4028 lb)	90			(5)		
	TB	1350 mm (54 inch)	1.87 m³ (2.45 yd³)	2065 kg (4552 lb)					(2)	(2)
		1650 mm (66 inch)	2.41 m³ (3.15 yd³)	2385 kg (5258 lb)					(4)	(5)

(1) Equipped with a 6800 kg (14991 lb) counterweight and 600 mm (24 inch) track shoes
(2) 2100 kg/m³ (3500 lb/yd³) is the maximum density of material.
(3) 1200 kg/m³ (2000 lb/yd³) is the maximum density of material.
(4) 1800 kg/m³ (3000 lb/yd³) is the maximum density of material.
(5) 1500 kg/m³ (2500 lb/yd³) is the maximum density of material.

Table 13

336 and 336 GC Excavators with a quick coupler(1)										
Bucket Type	**Linkage**	**Width of Bucket**	**Capacity of Bucket**	**Weight of Bucket**	**Fill (%)**	**6.5 m (21 ft 4 inch) Reach Boom**		**6.5 m (21 ft 4 inch) Extreme Service Reach Boom**	**6.18 m (20 ft 3 inch) Mass Boom**	
						2.8 m (9 ft 2 inch) Stick	**3.2 m (10 ft 6 inch) Stick**	**3.2 m (10 ft 6 inch) ES Stick**	**2.15 m (7 ft 1 inch) ES Stick**	**2.55 m (8 ft 4 inch) Stick**
General Duty (GD)	DB	1050 mm (42 inch)	1.17 m³ (1.54 yd³)	986 kg (2174 lb)	100	(2)	(2)	(2)		
		1200 mm (48 inch)	1.40 m³ (1.84 yd³)	1064 kg (2346 lb)		(2)	(2)	(2)		
		1350 mm (54 inch)	1.64 m³ (2.15 yd³)	1143 kg (2520 lb)		(2)	(3)	(3)		
		1500 mm (60 inch)	1.87 m³ (2.45 yd³)	1245 kg (2745 lb)		(3)	(4)	(4)		

(continued)

(Table 13, contd)

		1650 mm (66 inch)	2.11 m³ (2.75 yd³)	1324 kg (2919 lb)				(5)		
Heavy Duty (HD)	DB	1350 mm (54 inch)	1.64 m³ (2.15 yd³)	1417 kg (3124 lb)		(3)	(3)	(4)		
		1500 mm (60 inch)	1.88 m³ (2.46 yd³)	1514 kg (3338 lb)		(4)	(4)	(5)		
		1650 mm (66 inch)	2.12 m³ (2.77 yd³)	1647 kg (3631 lb)				(5)		
	TB	1650 mm (66 inch)	2.41 m³ (3.15 yd³)	2117 kg (4667 lb)					(4)	(5)
Severe Duty (SD)	DB	1050 mm (42 inch)	1.17 m³ (1.53 yd³)	1272 kg (2804 lb)	90	(2)	(2)	(2)		
		1650 mm (66 inch)	2.15 m³ (2.81 yd³)	1802 kg (3973 lb)				(5)		
	TB	1350 mm (54 inch)	1.87 m³ (2.45 yd³)	1974 kg (4352 lb)					(2)	(3)
		1650 mm (66 inch)	2.41 m³ (3.15 yd³)	2295 kg (5060 lb)					(4)	(5)

(1) Equipped with a 6800 kg (14991 lb) counterweight and 600 mm (24 inch) track shoes
(2) 2100 kg/m³ (3500 lb/yd³) is the maximum density of material.
(3) 1800 kg/m³ (3000 lb/yd³) is the maximum density of material.
(4) 1500 kg/m³ (2500 lb/yd³) is the maximum density of material.
(5) 1200 kg/m³ (2000 lb/yd³) is the maximum density of material.

Table 14

336 and 336 GC Excavator without a quick coupler(1)								
Bucket Type	**Linkage**	**Width of Bucket**	**Capacity of Bucket**	**Weight of Bucket**	**Fill (%)**	**6.5 m (21 ft 4 inch) Reach Boom**		**6.5 m (21 ft 4 inch) Extreme Service Reach Boom**
						2.8 m (9 ft 2 inch) Stick	**3.2 m (10 ft 6 inch) Stick**	**3.2 m (10 ft 6 inch) ES Stick**
General Duty (GD)	DB	1350 mm (54 inch)	1.64 m³ (1.23 yd³)	1173 kg (2586 lb)	100	(2)	(3)	(3)
		1650 mm (66 inch)	2.11 m³ (2.76 yd³)	1352 kg (2981 lb)				(5)
		1800 mm (71 inch)	2.35 m³ (3.07 yd³)	1453 kg (3203 lb)				(6)
Heavy Duty (HD)	DB	1350 mm (54 inch)	1.64 m³ (2.15 yd³)	1481 kg (3265 lb)		(3)	(3)	(4)
		1500 mm (60 inch)	1.88 m³ (2.46 yd³)	1600 kg (3527 lb)		(4)	(4)	(5)
		1650 mm (66 inch)	2.12 m³ (2.77 yd³)	1730 kg (3814 lb)				(6)
Severe Duty (SD)	DB	1650 mm (66 inch)	2.15m³ (2.81 yd³)	1827 kg (4028 lb)	90			(5)

(1) Equipped with a 6800 kg (14991 lb) counterweight and 600 mm (24 inch) track shoes
(2) 2100 kg/m³ (3500 lb/yd³) is the maximum density of material.

(continued)

(Table 14, contd)

(3) 1800 kg/m³ (3000 lb/yd³) is the maximum density of material.
(4) 1500 kg/m³ (2500 lb/yd³) is the maximum density of material.
(5) 1200 kg/m³ (2000 lb/yd³) is the maximum density of material.
(6) 900 kg/m³ (1500 lb/yd³) is the maximum density of material.

Table 15

336 and 336 GC Excavator with a quick coupler(1)								
Bucket Type	**Linkage**	**Width of Bucket**	**Capacity of Bucket**	**Weight of Bucket**	**Fill (%)**	**6.5 m (21 ft 4 inch) Reach Boom**		**6.5 m (21 ft 4 inch) Extreme Service Reach Boom**
						2.8 m (9 ft 2 inch) Stick	**3.2 m (10 ft 6 inch) Stick**	**3.2 m (10 ft 6 inch) ES Stick**
General Duty (GD)	DB	1050 mm (42 inch)	1.17 m³ (1.54 yd³)	986 kg (2174 lb)	100	(2)	(2)	(2)
		1200 mm (48 inch)	1.40 m³ (1.84 yd³)	1064 kg (2346 lb)		(2)	(2)	(3)
		1350 mm (54 inch)	1.64 m³ (2.15 yd³)	1143 kg (2520 lb)		(3)	(4)	(4)
		1500 mm (60 inch)	1.87 m³ (2.45 yd³)	1245 kg (2745 lb)		(4)	(5)	(5)
		1650 mm (66 inch)	2.11 m³ (2.75 yd³)	1324 kg (2919 lb)				(6)
Heavy Duty (HD)	DB	1350 mm (54 inch)	1.64 m³ (2.15 yd³)	1417 kg (3124 lb)		(4)	(4)	(5)
		1500 mm (60 inch)	1.88 m³ (2.46 yd³)	1514 kg (3338 lb)		(5)	(5)	(6)
		1650 mm (66 inch)	2.12 m³ (2.77 yd³)	1647 kg (3631 lb)				(6)
Severe Duty (SD)	DB	1050 mm (42 inch)	1.17 m³ (1.53 yd³)	1272 kg (2804 lb)	90	(2)	(2)	(2)
		1650 mm (66 inch)	2.15m³ (2.81 yd³)	1802 kg (3973 lb)				(6)

(1) Equipped with a 6800 kg (14991 lb) counterweight and 600 mm (24 inch) track shoes
(2) 2100 kg/m³ (3500 lb/yd³) is the maximum density of material.
(3) 1800 kg/m³ (3000 lb/yd³) is the maximum density of material.
(4) 1500 kg/m³ (2500 lb/yd³) is the maximum density of material.
(5) 1200 kg/m³ (2000 lb/yd³) is the maximum density of material.
(6) 900 kg/m³ (1500 lb/yd³) is the maximum density of material.

i07318423

Lifting Capacities

SMCS Code: 7000

WARNING

Failure to comply to the rated load can cause possible personal injury or property damage. This includes the risk of unintended boom lowering. Review the rated load of a particular work tool before performing any operation. Make adjustments to the rated load as necessary for non-standard configurations.

There may be local regulations and/or government regulations that govern the use of excavators which lift heavy objects. Obey all local and government regulations.

Lifting capacities should be used as a guide. Work tools, uneven ground conditions, soft ground conditions, or poor ground conditions have effects on lifting capacities. The operator is responsible for being aware of these effects.

The lifting capacities are defined by “ISO 10567 2007”. The lifting capacities are defined as the lower value of 75% of the static tipping capacity or 87% of the hydraulic lift capacity.

Note: Lifting capacities are based on a standard machine with the following conditions:

- Lift point: Stick nose without bucket
- Lubricants full
- Fuel tank full
- Steel track
- Complete cab with a 75 kg (165 lb) operator

Lifting capacities will vary with different work tools and attachments. The weight of a work tool attachment must be subtracted from the lift capacity. Consult your Cat dealer regarding the lifting capacities for specific work tools and attachments.

This machine may be equipped with various sticks. Lifting capacities may vary between the different sticks. Measure the distance on the stick between the boom hinge pin and the work tool hinge pin. This distance will inform you of the size of the stick that is equipped on the machine.

Use the lifting eye that is provided on the stick nose to lift objects. When the lifting eye is used, the connection must be made with a sling or shackle.

Note: Japan regulations require a shovel crane configuration to lift certain objects. A shovel crane has a rated load capacity, therefore, the lift capacities discussed below do not apply to a shovel crane configuration. Contact your Cat dealer for additional information.

Note: In European countries, regulations require an overload warning device and a boom and stick lowering control device if more than 1000 kg (2200 lb) is lifted during object handling applications. Regulations also require an overload warning device and a boom lowering control device if a moment that is greater than 40000 N·m (29500 lb ft) is created during object handling applications. If the machine is not equipped with these devices, even if the hydraulic lift capacity is capable, do not exceed a load of 1000 kg (2200 lb). Do not exceed a moment that is greater than 40000 N·m (29500 lb ft) in European object handling applications.

Configuration Identification

Note: Each component has a stamp to identify the configuration affecting lifting capacity.

The owner will need to check the machine configuration to identify the correct lifting capacity.

The configuration identifier will be located with the part number stamped on the component. Refer to the following table for the abbreviation of the configuration.

Table 16

Configuration Identification		
Component	**Configuration**	**Abbreviation**
Front	Reach Boom	R
	Mass Boom	M
	Variable Angle Boom	VA
	Super Long Reach Boom	SLR
	Standard	STD
	Heavy Duty	HD
	Extreme Special	ES
	Thumb Ready Stick	TR
Undercarriage	Short Undercarriage (Crawler)	STD
	Long Undercarriage (Crawler)	LC
	Long Narrow Undercarriage (Crawler)	LN

(continued)

(Table 16, contd)

Configuration Identification		
Compo-nent	**Configuration**	**Ab-brevi-ation**
Cylinder	Standard	-
	Heavy Lift	HL
Counter-weight	Metric Ton (tonne)	t[1]

[1] Counterweight stamp indicates metric ton. (example 1.0t = 1000 kg)

Symbols Found in the Lifting Capacity Charts

Below are symbols that are commonly found on lifting capacity charts for track excavators.

Note: Depending on the machine configuration, some symbols may not be used.

(mm)
(inch) **Measurements are provided in millimeters and inches**

Lift Capacities are provided in kilograms and pounds

* **Load is limited by hydraulic lifting capacity rather than by a tipping load**

Lift point radius

Lift point height

Lifting capacity over the front of the machine

Lifting capacity over the side of the machine

Heavy Lift ON

336 LC with 7560 kg (16667 lb) Counterweight

6.18 m (20 ft 3 inch) Mass Boom

2.55 m (8 ft 4 inch) Stick

(mm) (inch)	1500 60		3000 120		4500 180		6000 240		7500 300				
kg / Lb													(mm) (inch)
7500							* 9100	* 9100			* 8200	* 8200	6580
300							* 20100	* 20100			* 18150	* 18150	260
6000							* 9400	* 9400	* 8850	7750	* 7800	7600	7600
240							* 20500	* 20500			* 17200	16900	300
4500					* 13200	* 13200	* 10450	* 10450	* 9150	7600	* 7800	6550	8210
180					* 28350	* 28350	* 22650	* 22650	* 19900	16350	* 17150	14500	330
3000					* 16100	15350	* 11750	10150	* 9700	7350	* 8100	6050	8520
120					* 34650	33150	* 25400	21900	* 21100	15800	* 17800	13300	340
1500					* 17900	14500	* 12850	9700	* 10250	7100	* 8700	5850	8550
60					* 38650	31250	* 27750	20850	* 22200	15250	* 19150	12900	340
0					* 18050	14200	* 13300	9400	* 10450	6900	* 9250	6050	8310
0					* 39150	30550	* 28750	20250	* 22550	14900	* 20350	13250	330
-1500			* 16800	* 16800	* 17100	14200	* 12900	9350	* 9950	6900	* 9400	6600	7780
-60			* 38050	* 38050	* 37150	30550	* 27950	20100	* 21400	14900	* 20750	14550	310
-3000			* 19550	* 19550	* 15050	14450	* 11450	9450			* 9400	7900	6880
-120			* 42450	* 42450	* 32550	31050	* 24550	20400			* 20700	17550	270
-4500					* 11000	* 11000					* 8650	* 8650	5430
-180					* 23150	* 23150					* 18900	* 18900	210

Illustration 68 g06281158

336 LC: 7560 kg (16667 lb) counterweight, 6.18 m (20 ft 3 inch) mass boom, 2.55 m (8 ft 4 inch) stick, 850 mm (33 inch) TG track shoes.

(mm) (inch)	1500 60		3000 120		4500 180		6000 240		7500 300				
kg / Lb													(mm) (inch)
7500							* 10050	* 10050			* 8950	* 8950	6580
300							* 22250	* 22250			* 19850	* 19850	260
6000							* 10400	* 10400	* 9800	7750	* 8550	7600	7600
240							* 22700	* 22700			* 18800	16900	300
4500					* 14600	* 14600	* 11600	10750	* 10150	7600	* 8550	6550	8210
180					* 31350	* 31350	* 25100	23150	* 22100	16350	* 18750	14500	330
3000					* 17850	15350	* 13050	10150	* 10800	7350	* 8850	6050	8520
120					* 38350	33150	* 28200	21900	* 23400	15800	* 19450	13300	340
1500					* 19850	14500	* 14250	9700	11250	7100	9250	5850	8550
60					* 42850	31250	* 30800	20850	24200	15250	20350	12900	340
0					* 20050	14200	* 14750	9400	11050	6900	9550	6050	8310
0					* 43450	30550	* 31950	20250	23800	14900	21050	13250	330
-1500			* 17750	* 17750	* 19000	14200	* 14350	9350	11050	6900	* 10500	6600	7780
-60			* 40350	* 40350	* 41250	30550	* 31100	20100	23800	14900	* 23100	14550	310
-3000			* 21800	* 21800	* 16750	14450	* 12750	9450			* 10500	7900	6880
-120			* 47300	* 47300	* 36250	31050	* 27350	20400			* 23100	17550	270
-4500					* 12300	* 12300					* 9700	* 9700	5430
-180					* 25950	* 25950					* 21200	* 21200	210

Illustration 69 g06281159

336 LC: 7560 kg (16667 lb) counterweight, 6.18 m (20 ft 3 inch) mass boom, 2.55 m (8 ft 4 inch) stick, 850 mm (33 inch) TG track shoes heavy lift ON.

(mm) (inch)	1500 60		3000 120		4500 180		6000 240		7500 300				
kg / Lb													(mm) (inch)
7500							* 9100	* 9100			* 8200	* 8200	6580
300							* 20100	* 20100			* 18150	* 18150	260
6000							* 9400	* 9400	* 8850	7600	* 7800	7450	7600
240							* 20500	* 20500			* 17200	16600	300
4500					* 13200	* 13200	* 10450	* 10450	* 9150	7450	* 7800	6400	8210
180					* 28350	* 28350	* 22650	* 22650	* 19900	16000	* 17150	14200	330
3000					* 16100	15100	* 11750	9950	* 9700	7200	* 8100	5900	8520
120					* 34650	32550	* 25400	21500	* 21100	15450	* 17800	13050	340
1500					* 17900	14200	* 12850	9500	* 10250	6950	* 8700	5750	8550
60					* 38650	30650	* 27750	20450	* 22200	14950	* 19150	12650	340
0					* 18050	13950	* 13300	9200	* 10450	6800	* 9250	5900	8310
0					* 39150	29950	* 28750	19850	* 22550	14600	* 20350	13000	330
-1500			* 16800	* 16800	* 17100	13950	* 12900	9150	* 9950	6750	* 9400	6450	7780
-60			* 38050	* 38050	* 37150	29950	* 27950	19700	* 21400	14550	* 20750	14250	310
-3000			* 19550	* 19550	* 15050	14150	* 11450	9300			* 9400	7750	6880
-120			* 42450	* 42450	* 32550	30450	* 24550	20000			* 20700	17200	270
-4500					* 11000	* 11000					* 8650	* 8650	5430
-180					* 23150	* 23150					* 18900	* 18900	210

Illustration 70 g06281156

336 LC: 7560 kg (16667 lb) counterweight, 6.18 m (20 ft 3 inch) mass boom, 2.55 m (8 ft 4 inch) stick, 700 mm (28 inch) TG track shoes.

(mm) (inch)	1500 60		3000 120		4500 180		6000 240		7500 300				
kg / Lb													(mm) (inch)
7500							* 10050	* 10050			* 8950	* 8950	6580
300							* 22250	* 22250			* 19850	* 19850	260
6000							* 10400	* 10400	* 9800	7600	* 8550	7450	7600
240							* 22700	* 22700			* 18800	16600	300
4500					* 14600	* 14600	* 11600	10550	* 10150	7450	* 8550	6400	8210
180					* 31350	* 31350	* 25100	22700	* 22100	16000	* 18750	14200	330
3000					* 17850	15100	* 13050	9950	* 10800	7200	* 8850	5900	8520
120					* 38350	32550	* 28200	21500	* 23400	15450	* 19450	13050	340
1500					* 19850	14200	* 14250	9500	11000	6950	9050	5750	8550
60					* 42850	30650	* 30800	20450	23700	14950	19950	12650	340
0					* 20050	13950	* 14750	9200	10850	6800	9350	5900	8310
0					* 43450	29950	* 31950	19850	23300	14600	20550	13000	330
-1500			* 17750	* 17750	* 19000	13950	* 14350	9150	10800	6750	10300	6450	7780
-60			* 40350	* 40350	* 41250	29950	* 31100	19700	23300	14550	22700	14250	310
-3000			* 21800	* 21800	* 16750	14150	* 12750	9300			* 10500	7750	6880
-120			* 47300	* 47300	* 36250	30450	* 27350	20000			* 23100	17200	270
-4500					* 12300	* 12300					* 9700	* 9700	5430
-180					* 25950	* 25950					* 21200	* 21200	210

Illustration 71 g06281157

336 LC: 7560 kg (16667 lb) counterweight, 6.18 m (20 ft 3 inch) mass boom, 2.55 m (8 ft 4 inch) stick, 700 mm (28 inch) TG track shoes heavy lift ON.

(mm) (inch)	1500 60		3000 120		4500 180		6000 240		7500 300				
kg / Lb													(mm) (inch)
7500							* 9100	* 9100			* 8200	* 8200	6580
300							* 20100	* 20100			* 18150	* 18150	260
6000							* 9400	* 9400	* 8850	7550	* 7800	7400	7600
240							* 20500	* 20500			* 17200	16450	300
4500					* 13200	* 13200	* 10450	* 10450	* 9150	7400	* 7800	6350	8210
180					* 28350	* 28350	* 22650	22550	* 19900	15900	* 17150	14100	330
3000					* 16100	14950	* 11750	9900	* 9700	7150	* 8100	5850	8520
120					* 34650	32300	* 25400	21300	* 21100	15350	* 17800	12900	340
1500					* 17900	14100	* 12850	9400	* 10250	6900	* 8700	5700	8550
60					* 38650	30350	* 27750	20300	* 22200	14800	* 19150	12550	340
0					* 18050	13800	* 13300	9150	* 10450	6700	* 9250	5850	8310
0					* 39150	29700	* 28750	19650	* 22550	14450	* 20350	12850	330
-1500			* 16800	* 16800	* 17100	13800	* 12900	9050	* 9950	6700	* 9400	6400	7780
-60			* 38050	* 38050	* 37150	29700	* 27950	19500	* 21400	14450	* 20750	14100	310
-3000			* 19550	* 19550	* 15050	14050	* 11450	9200			* 9400	7700	6880
-120			* 42450	* 42450	* 32550	30200	* 24550	19850			* 20700	17050	270
-4500					* 11000	* 11000					* 8650	* 8650	5430
-180					* 23150	* 23150					* 18900	* 18900	210

Illustration 72 g06281153

336 LC: 7560 kg (16667 lb) counterweight, 6.18 m (20 ft 3 inch) mass boom, 2.55 m (8 ft 4 inch) stick, 600 mm (24 inch) TG track shoes.

(mm) (inch)	1500 60		3000 120		4500 180		6000 240		7500 300				
kg / Lb													(mm) (inch)
7500							* 10050	* 10050			* 8950	* 8950	6580
300							* 22250	* 22250			* 19850	* 19850	260
6000							* 10400	* 10400	* 9800	7550	* 8550	7400	7600
240							* 22700	* 22700			* 18800	16450	300
4500					* 14600	* 14600	* 11600	10450	* 10150	7400	* 8550	6350	8210
180					* 31350	* 31350	* 25100	22550	* 22100	15900	* 18750	14100	330
3000					* 17850	14950	* 13050	9900	* 10800	7150	* 8850	5850	8520
120					* 38350	32300	* 28200	21300	* 23400	15350	* 19450	12900	340
1500					* 19850	14100	* 14250	9400	10900	6900	8950	5700	8550
60					* 42850	30350	* 30800	20300	23500	14800	19750	12550	340
0					* 20050	13800	* 14750	9150	10750	6700	9250	5850	8310
0					* 43450	29700	* 31950	19650	23100	14450	20400	12850	330
-1500			* 17750	* 17750	* 19000	13800	* 14350	9050	10700	6700	10200	6400	7780
-60			* 40350	* 40350	* 41250	29700	* 31100	19500	23050	14450	22500	14100	310
-3000			* 21800	* 21800	* 16750	14050	* 12750	9200			* 10500	7700	6880
-120			* 47300	* 47300	* 36250	30200	* 27350	19850			* 23100	17050	270
-4500					* 12300	* 12300					* 9700	* 9700	5430
-180					* 25950	* 25950					* 21200	* 21200	210

Illustration 73 g06281155

336 LC: 7560 kg (16667 lb) counterweight, 6.18 m (20 ft 3 inch) mass boom, 2.55 m (8 ft 4 inch) stick, 600 mm (24 inch) TG track shoes heavy lift ON.

(mm) (inch)	1500 60		3000 120		4500 180		6000 240		7500 300				
kg / Lb													(mm) (inch)
7500							* 9100	* 9100			* 8200	* 8200	6580
300							* 20100	* 20100			* 18150	* 18150	260
6000							* 9400	* 9400	* 8850	7650	* 7800	7500	7600
240							* 20500	* 20500			* 17200	16700	300
4500					* 13200	* 13200	* 10450	* 10450	* 9150	7500	* 7800	6450	8210
180					* 28350	* 28350	* 22650	* 22650	* 19900	16150	* 17150	14300	330
3000					* 16100	15200	* 11750	10050	* 9700	7250	* 8100	5950	8520
120					* 34650	32750	* 25400	21650	* 21100	15600	* 17800	13150	340
1500					* 17900	14300	* 12850	9550	* 10250	7000	* 8700	5800	8550
60					* 38650	30850	* 27750	20600	* 22200	15050	* 19150	12750	340
0					* 18050	14050	* 13300	9300	* 10450	6850	* 9250	5950	8310
0					* 39150	30150	* 28750	20000	* 22550	14700	* 20350	13100	330
-1500			* 16800	* 16800	* 17100	14050	* 12900	9200	* 9950	6800	* 9400	6500	7780
-60			* 38050	* 38050	* 37150	30150	* 27950	19850	* 21400	14700	* 20750	14350	310
-3000			* 19550	* 19550	* 15050	14250	* 11450	9350			* 9400	7800	6880
-120			* 42450	* 42450	* 32550	30650	* 24550	20150			* 20700	17350	270
-4500					* 11000	* 11000					* 8650	* 8650	5430
-180					* 23150	* 23150					* 18900	* 18900	210

Illustration 74 g06281169

336 LC: 7560 kg (16667 lb) counterweight, 6.18 m (20 ft 3 inch) mass boom, 2.55 m (8 ft 4 inch) stick, 600 mm (24 inch) heavy-duty TG track shoes.

(mm) (inch)	1500 60		3000 120		4500 180		6000 240		7500 300				
kg / Lb													(mm) (inch)
7500							* 10050	* 10050			* 8950	* 8950	6580
300							* 22250	* 22250			* 19850	* 19850	260
6000							* 10400	* 10400	* 9800	7650	* 8550	7500	7600
240							* 22700	* 22700			* 18800	16700	300
4500					* 14600	* 14600	* 11600	10600	* 10150	7500	* 8550	6450	8210
180					* 31350	* 31350	* 25100	22850	* 22100	16150	* 18750	14300	330
3000					* 17850	15200	* 13050	10050	* 10800	7250	* 8850	5950	8520
120					* 38350	32750	* 28200	21650	* 23400	15600	* 19450	13150	340
1500					* 19850	14300	* 14250	9550	11100	7000	9100	5800	8550
60					* 42850	30850	* 30800	20600	23850	15050	20100	12750	340
0					* 20050	14050	* 14750	9300	10900	6850	9400	5950	8310
0					* 43450	30150	* 31950	20000	23500	14700	20750	13100	330
-1500			* 17750	* 17750	* 19000	14050	* 14350	9200	10900	6800	10350	6500	7780
-60			* 40350	* 40350	* 41250	30150	* 31100	19850	23450	14700	22850	14350	310
-3000			* 21800	* 21800	* 16750	14250	* 12750	9350			* 10500	7800	6880
-120			* 47300	* 47300	* 36250	30650	* 27350	20150			* 23100	17350	270
-4500					* 12300	* 12300					* 9700	* 9700	5430
-180					* 25950	* 25950					* 21200	* 21200	210

Illustration 75 g06281170

336 LC: 7560 kg (16667 lb) counterweight, 6.18 m (20 ft 3 inch) mass boom, 2.55 m (8 ft 4 inch) stick, 600 mm (24 inch) heavy-duty TG track shoes heavy lift ON.

(mm) (inch)	1500 60		3000 120		4500 180		6000 240		7500 300				
kg / Lb													(mm) (inch)
7500							* 9100	* 9100			* 8200	* 8200	6580
300							* 20100	* 20100			* 18150	* 18150	260
6000							* 9400	* 9400	* 8850	7700	* 7800	7500	7600
240							* 20500	* 20500			* 17200	16750	300
4500					* 13200	* 13200	* 10450	* 10450	* 9150	7550	* 7800	6500	8210
180					* 28350	* 28350	* 22650	* 22650	* 19900	16150	* 17150	14350	330
3000					* 16100	15200	* 11750	10050	* 9700	7250	* 8100	5950	8520
120					* 34650	32850	* 25400	21700	* 21100	15600	* 17800	13150	340
1500					* 17900	14350	* 12850	9600	* 10250	7000	* 8700	5800	8550
60					* 38650	30900	* 27750	20650	* 22200	15100	* 19150	12800	340
0					* 18050	14050	* 13300	9300	* 10450	6850	* 9250	5950	8310
0					* 39150	30250	* 28750	20050	* 22550	14750	* 20350	13100	330
-1500			* 16800	* 16800	* 17100	14050	* 12900	9250	* 9950	6850	* 9400	6500	7780
-60			* 38050	* 38050	* 37150	30250	* 27950	19900	* 21400	14700	* 20750	14400	310
-3000			* 19550	* 19550	* 15050	14300	* 11450	9350			* 9400	7850	6880
-120			* 42450	* 42450	* 32550	30750	* 24550	20200			* 20700	17350	270
-4500					* 11000	* 11000					* 8650	* 8650	5430
-180					* 23150	* 23150					* 18900	* 18900	210

Illustration 76 g06281162

336 LC: 7560 kg (16667 lb) counterweight, 6.18 m (20 ft 3 inch) mass boom, 2.55 m (8 ft 4 inch) stick, 600 mm (24 inch) DG track shoes.

(mm) (inch)	1500 60		3000 120		4500 180		6000 240		7500 300				
kg / Lb													(mm) (inch)
7500							* 10050	* 10050			* 8950	* 8950	6580
300							* 22250	* 22250			* 19850	* 19850	260
6000							* 10400	* 10400	* 9800	7700	* 8550	7500	7600
240							* 22700	* 22700			* 18800	16750	300
4500					* 14600	* 14600	* 11600	10650	* 10150	7550	* 8550	6500	8210
180					* 31350	* 31350	* 25100	22900	* 22100	16150	* 18750	14350	330
3000					* 17850	15200	* 13050	10050	* 10800	7250	* 8850	5950	8520
120					* 38350	32850	* 28200	21700	* 23400	15600	* 19450	13150	340
1500					* 19850	14350	* 14250	9600	11150	7000	9150	5800	8550
60					* 42850	30900	* 30800	20650	23950	15100	20150	12800	340
0					* 20050	14050	* 14750	9300	10950	6850	9450	5950	8310
0					* 43450	30250	* 31950	20050	23550	14750	20800	13100	330
-1500			* 17750	* 17750	* 19000	14050	* 14350	9250	10900	6850	10400	6500	7780
-60			* 40350	* 40350	* 41250	30250	* 31100	19900	23550	14700	22900	14400	310
-3000			* 21800	* 21800	* 16750	14300	* 12750	9350			* 10500	7850	6880
-120			* 47300	* 47300	* 36250	30750	* 27350	20200			* 23100	17350	270
-4500					* 12300	* 12300					* 9700	* 9700	5430
-180					* 25950	* 25950					* 21200	* 21200	210

Illustration 77 g06281166

336 LC: 7560 kg (16667 lb) counterweight, 6.18 m (20 ft 3 inch) mass boom, 2.55 m (8 ft 4 inch) stick, 600 mm (24 inch) DG track shoes heavy lift ON.

6.5 m (21 ft 4 inch) Reach Boom

2.8 m (9 ft 2 inch) Stick

(mm) (inch)	1500 60		3000 120		4500 180		6000 240		7500 300		9000 360				(mm) (inch)
7500													* 8500	8450	7340
300													* 18850	* 18850	290
6000							* 9100	* 9100	* 8450	8100			* 8200	6950	8250
240							* 19800	* 19800	* 18550	17450			* 18050	15400	330
4500					* 13150	* 13150	* 10350	* 10350	* 9000	7900			* 8200	6150	8820
180					* 28250	* 28250	* 22400	* 22400	* 19550	17050			* 18000	13550	350
3000					* 16350	15700	* 11800	10500	* 9700	7650	* 8600	5850	* 8450	5750	9110
120					* 35100	33900	* 25550	22600	* 21050	16450			* 18600	12650	360
1500					* 15900	14900	* 13050	10000	* 10350	7400	* 8800	5700	8650	5600	9140
60					* 38750	32100	* 28200	21600	* 22500	15900			19000	12300	360
0					* 18600	14600	* 13650	9750	* 10750	7200			8850	5750	8920
0					* 40300	31450	* 29500	21000	* 23250	15550			19500	12600	350
-1500			* 12350	* 12350	* 17900	14600	* 13500	9650	* 10600	7150			* 9100	6150	8420
-60			* 28150	* 28150	* 38800	31400	* 29250	20800	* 22900	15400			* 20050	13600	340
-3000			* 21350	* 21350	* 16250	14750	* 12500	9700	* 9450	7250			* 9250	7150	7600
-120			* 46450	* 46450	* 35200	31750	* 26950	20950					* 20300	15800	300
-4500			* 17000	* 17000	* 13200	* 13200	* 9850	* 9850					* 9000	* 9000	6330
-180			* 36550	* 36550	* 28300	* 28300	* 20600	* 20600					* 19700	* 19700	250

Illustration 78 g06281211

336 LC: 7560 kg (16667 lb) counterweight, 6.5 m (21 ft 4 inch) reach boom, 2.8 m (9 ft 2 inch) stick, 850 mm (33 inch) TG track shoes.

(mm) (inch)	1500 60		3000 120		4500 180		6000 240		7500 300		9000 360				(mm) (inch)
7500													* 9300	8450	7340
300													* 20600	19000	290
6000							* 10050	* 10050	* 9350	8100			* 8950	6950	8250
240							* 21850	* 21850	* 20500	17450			* 19700	15400	330
4500					* 14500	* 14500	* 11450	11050	* 9950	7900			* 8950	6150	8820
180					* 31150	* 31150	* 24750	23800	* 21650	17050			* 19700	13550	350
3000					* 18050	15700	* 13100	10500	* 10750	7650	8950	5850	8800	5750	9110
120					* 38800	33900	* 28250	22600	* 23350	16450			19400	12650	360
1500					* 16850	14900	* 14450	10000	* 11500	7400	8850	5700	8650	5600	9140
60					* 41000	32100	* 31200	21600	24800	15900			19000	12300	360
0					* 19800	14600	* 15100	9750	11350	7200			8850	5750	8920
0					* 44550	31450	* 32700	21000	24400	15550			19500	12600	350
-1500			* 13100	* 13100	* 19800	14600	* 14950	9650	11250	7150			9600	6150	8420
-60			* 29850	* 29850	* 42950	31400	* 32400	20800	24250	15400			21150	13600	340
-3000			* 23600	* 23600	* 18050	14750	* 13850	9700	* 10500	7250			* 10250	7150	7600
-120			* 51500	* 51500	* 39050	31750	* 29900	20950					* 22600	15800	300
-4500			* 18950	* 18950	* 14700	* 14700	* 10950	10000					* 10000	9350	6330
-180			* 40750	* 40750	* 31500	* 31500	* 22950	21650					* 21950	21000	250

Illustration 79 g06281212

336 LC: 7560 kg (16667 lb) counterweight, 6.5 m (21 ft 4 inch) reach boom, 2.8 m (9 ft 2 inch) stick, 850 mm (33 inch) TG track shoes heavy lift ON.

(mm) (inch)	1500 60		3000 120		4500 180		6000 240		7500 300		9000 360				
kg / Lb															(mm) (inch)
7500													* 8500	8300	7340
300													* 18850	18650	290
6000							* 9100	* 9100	* 8450	8000			* 8200	6800	8250
240							* 19800	* 19800	* 18550	17150			* 18050	15100	330
4500					* 13150	* 13150	* 10350	* 10350	* 9000	7750			* 8200	6000	8820
180					* 28250	* 28250	* 22400	* 22400	* 19550	16700			* 18000	13300	350
3000					* 16350	15400	* 11800	10300	* 9700	7500	* 8600	5700	* 8450	5600	9110
120					* 35100	33250	* 25550	22200	* 21050	16150			* 18600	12350	360
1500					* 15900	14600	* 13050	9800	* 10350	7250	8650	5600	8450	5500	9140
60					* 38750	31450	* 28200	21200	* 22500	15600			18600	12050	360
0					* 18600	14350	* 13650	9550	* 10750	7050			8700	5600	8920
0					* 40300	30850	* 29500	20550	* 23250	15200			19100	12350	350
-1500			* 12350	* 12350	* 17900	14350	* 13500	9450	* 10600	7000			* 9100	6050	8420
-60			* 28150	* 28150	* 38800	30800	* 29250	20350	* 22900	15100			* 20050	13300	340
-3000			* 21350	* 21350	* 16250	14500	* 12500	9500	* 9450	7100			* 9250	7000	7600
-120			* 46450	* 46450	* 35200	31150	* 26950	20500					* 20300	15500	300
-4500			* 17000	* 17000	* 13200	* 13200	* 9850	9800					* 9000	* 9000	6330
-180			* 36550	* 36550	* 28300	* 28300	* 20600	* 20600					* 19700	* 19700	250

Illustration 80 g06281208

336 LC: 7560 kg (16667 lb) counterweight, 6.5 m (21 ft 4 inch) reach boom, 2.8 m (9 ft 2 inch) stick, 700 mm (28 inch) TG track shoes.

(mm) (inch)	1500 60		3000 120		4500 180		6000 240		7500 300		9000 360				
kg / Lb															(mm) (inch)
7500													* 9300	8300	7340
300													* 20600	18650	290
6000							* 10050	* 10050	* 9350	8000			* 8950	6800	8250
240							* 21850	* 21850	* 20500	17150			* 19700	15100	330
4500					* 14500	* 14500	* 11450	10850	* 9950	7750			* 8950	6000	8820
180					* 31150	* 31150	* 24750	23350	* 21650	16700			* 19700	13300	350
3000					* 18050	15400	* 13100	10300	* 10750	7500	8750	5700	8600	5600	9110
120					* 38800	33250	* 28250	22200	* 23350	16150			18950	12350	360
1500					* 16850	14600	* 14450	9800	11300	7250	8650	5600	8450	5500	9140
60					* 41000	31450	* 31200	21200	24300	15600			18600	12050	360
0					* 19800	14350	* 15100	9550	11100	7050			8700	5600	8920
0					* 44550	30850	* 32700	20550	23900	15200			19100	12350	350
-1500			* 13100	* 13100	* 19800	14350	* 14950	9450	11050	7000			9400	6050	8420
-60			* 29850	* 29850	* 42950	30800	* 32400	20350	23750	15100			20700	13300	340
-3000			* 23600	* 23600	* 18050	14500	* 13850	9500	* 10500	7100			* 10250	7000	7600
-120			* 51500	* 51500	* 39050	31150	* 29900	20500					* 22600	15500	300
-4500			* 18950	* 18950	* 14700	* 14700	* 10950	9800					* 10000	9200	6330
-180			* 40750	* 40750	* 31500	* 31500	* 22950	21250					* 21950	20600	250

Illustration 81 g06281209

336 LC: 7560 kg (16667 lb) counterweight, 6.5 m (21 ft 4 inch) reach boom, 2.8 m (9 ft 2 inch) stick, 700 mm (28 inch) TG track shoes heavy lift ON.

(mm) (inch)	1500 60		3000 120		4500 180		6000 240		7500 300		9000 360				
kg / Lb															(mm) (inch)
7500													* 8500	8250	7340
300													* 18850	18500	290
6000							* 9100	* 9100	* 8450	7900			* 8200	6750	8250
240							* 19800	* 19800	* 18550	17000			* 18050	15000	330
4500					* 13150	* 13150	* 10350	* 10350	* 9000	7700			* 8200	5950	8820
180					* 28250	* 28250	* 22400	* 22400	* 19550	16600			* 18000	13200	350
3000					* 16350	15300	* 11800	10200	* 9700	7450	* 8600	5650	* 8450	5550	9110
120					* 35100	33000	* 25550	22000	* 21050	16000			* 18600	12250	360
1500					* 15900	14500	* 13050	9750	* 10350	7200	8550	5550	8400	5450	9140
60					* 38750	31200	* 28200	21000	* 22500	15450			18450	11950	360
0					* 18600	14200	* 13650	9450	* 10750	7000			8600	5550	8920
0					* 40300	30600	* 29500	20400	* 23250	15100			18950	12200	350
-1500			* 12350	* 12350	* 17900	14200	* 13500	9350	* 10600	6950			* 9100	6000	8420
-60			* 28150	* 28150	* 38800	30550	* 29250	20200	* 22900	14950			* 20050	13200	340
-3000			* 21350	* 21350	* 16250	14350	* 12500	9450	* 9450	7050			* 9250	6950	7600
-120			* 46450	* 46450	* 35200	30900	* 26950	20350					* 20300	15350	300
-4500			* 17000	* 17000	* 13200	* 13200	* 9850	9750					* 9000	* 9000	6330
-180			* 36550	* 36550	* 28300	* 28300	* 20600	* 20600					* 19700	* 19700	250

Illustration 82 g06281205

336 LC: 7560 kg (16667 lb) counterweight, 6.5 m (21 ft 4 inch) reach boom, 2.8 m (9 ft 2 inch) stick, 600 mm (24 inch) TG track shoes.

(mm) (inch)	1500 60		3000 120		4500 180		6000 240		7500 300		9000 360				
kg / Lb															(mm) (inch)
7500													* 9300	8250	7340
300													* 20600	18500	290
6000							* 10050	* 10050	* 9350	7900			* 8950	6750	8250
240							* 21850	* 21850	* 20500	17000			* 19700	15000	330
4500					* 14500	* 14500	* 11450	10750	* 9950	7700			* 8950	5950	8820
180					* 31150	* 31150	* 24750	23200	* 21650	16600			* 19700	13200	350
3000					* 18050	15300	* 13100	10200	* 10750	7450	8700	5650	8550	5550	9110
120					* 38800	33000	* 28250	22000	* 23350	16000			18800	12250	360
1500					* 16850	14500	* 14450	9750	11200	7200	8550	5550	8400	5450	9140
60					* 41000	31200	* 31200	21000	24100	15450			18450	11950	360
0					* 19800	14200	* 15100	9450	11000	7000			8600	5550	8920
0					* 44550	30600	* 32700	20400	23650	15100			18950	12200	350
-1500			* 13100	* 13100	* 19800	14200	* 14950	9350	10950	6950			9300	6000	8420
-60			* 29850	* 29850	* 42950	30550	* 32400	20200	23550	14950			20550	13200	340
-3000			* 23600	* 23600	* 18050	14350	* 13850	9450	* 10500	7050			* 10250	6950	7600
-120			* 51500	* 51500	* 39050	30900	* 29900	20350					* 22600	15350	300
-4500			* 18950	* 18950	* 14700	* 14700	* 10950	9750					* 10000	9100	6330
-180			* 40750	* 40750	* 31500	* 31500	* 22950	21050					* 21950	20450	250

Illustration 83 g06281206

336 LC: 7560 kg (16667 lb) counterweight, 6.5 m (21 ft 4 inch) reach boom, 2.8 m (9 ft 2 inch) stick, 600 mm (24 inch) TG track shoes heavy lift ON.

(mm) (inch)	1500 60		3000 120		4500 180		6000 240		7500 300		9000 360				
															(mm) (inch)
7500													* 8500	8350	7340
300													* 18850	18800	290
6000							* 9100	* 9100	* 8450	8050			* 8200	6850	8250
240							* 19800	* 19800	* 18550	17250			* 18050	15200	330
4500					* 13150	* 13150	* 10350	* 10350	* 9000	7800			* 8200	6050	8820
180					* 28250	* 28250	* 22400	* 22400	* 19550	16850			* 18000	13400	350
3000					* 16350	15500	* 11800	10350	* 9700	7550	* 8600	5750	* 8450	5650	9110
120					* 35100	33500	* 25550	22350	* 21050	16250			* 18600	12450	360
1500					* 15900	14700	* 13050	9900	* 10350	7300	8700	5650	8500	5550	9140
60					* 38750	31700	* 28200	21300	* 22500	15700			18750	12150	360
0					* 18600	14450	* 13650	9600	* 10750	7100			8750	5650	8920
0					* 40300	31050	* 29500	20700	* 23250	15350			19250	12450	350
-1500			* 12350	* 12350	* 17900	14450	* 13500	9500	* 10600	7050			* 9100	6100	8420
-60			* 28150	* 28150	* 38800	31000	* 29250	20500	* 22900	15200			* 20050	13400	340
-3000			* 21350	* 21350	* 16250	14600	* 12500	9600	* 9450	7150			* 9250	7050	7600
-120			* 46450	* 46450	* 35200	31350	* 26950	20650					* 20300	15600	300
-4500			* 17000	* 17000	* 13200	* 13200	* 9850	* 9850					* 9000	* 9000	6330
-180			* 36550	* 36550	* 28300	* 28300	* 20600	* 20600					* 19700	* 19700	250

Illustration 84 g06281215

336 LC: 7560 kg (16667 lb) counterweight, 6.5 m (21 ft 4 inch) reach boom, 2.8 m (9 ft 2 inch) stick, 600 mm (24 inch) heavy-duty TG track shoes.

(mm) (inch)	1500 60		3000 120		4500 180		6000 240		7500 300		9000 360				
															(mm) (inch)
7500													* 9300	8350	7340
300													* 20600	18800	290
6000							* 10050	* 10050	* 9350	8050			* 8950	6850	8250
240							* 21850	* 21850	* 20500	17250			* 19700	15200	330
4500					* 14500	* 14500	* 11450	10900	* 9950	7800			* 8950	6050	8820
180					* 31150	* 31150	* 24750	23500	* 21650	16850			* 19700	13400	350
3000					* 18050	15500	* 13100	10350	* 10750	7550	8850	5750	8650	5650	9110
120					* 38800	33500	* 28250	22350	* 23350	16250			19100	12450	360
1500					* 16850	14700	* 14450	9900	11400	7300	8700	5650	8500	5550	9140
60					* 41000	31700	* 31200	21300	24500	15700			18750	12150	360
0					* 19800	14450	* 15100	9600	11200	7100			8750	5650	8920
0					* 44550	31050	* 32700	20700	24050	15350			19250	12450	350
-1500			* 13100	* 13100	* 19800	14450	* 14950	9500	11100	7050			9450	6100	8420
-60			* 29850	* 29850	* 42950	31000	* 32400	20500	23900	15200			20850	13400	340
-3000			* 23600	* 23600	* 18050	14600	* 13850	9600	* 10500	7150			* 10250	7050	7600
-120			* 51500	* 51500	* 39050	31350	* 29900	20650					* 22600	15600	300
-4500			* 18950	* 18950	* 14700	* 14700	* 10950	9900					* 10000	9250	6330
-180			* 40750	* 40750	* 31500	* 31500	* 22950	21400					* 21950	20750	250

Illustration 85 g06281217

336 LC: 7560 kg (16667 lb) counterweight, 6.5 m (21 ft 4 inch) reach boom, 2.8 m (9 ft 2 inch) stick, 600 mm (24 inch) heavy-duty TG track shoes heavy lift ON.

(mm) (inch)	1500 60		3000 120		4500 180		6000 240		7500 300		9000 360				
															(mm) (inch)
7500													* 8500	8350	7340
300													* 18850	18800	290
6000							* 9100	* 9100	* 8450	8050			* 8200	6850	8250
240							* 19800	* 19800	* 18550	17250			* 18050	15200	330
4500					* 13150	* 13150	* 10350	* 10350	* 9000	7800			* 8200	6050	8820
180					* 28250	* 28250	* 22400	* 22400	* 19550	16850			* 18000	13400	350
3000					* 16350	15500	* 11800	10350	* 9700	7550	* 8600	5750	* 8450	5650	9110
120					* 35100	33500	* 25550	22350	* 21050	16250			* 18600	12450	360
1500					* 15900	14700	* 13050	9900	* 10350	7300	8700	5650	8500	5550	9140
60					* 38750	31700	* 28200	21300	* 22500	15700			18750	12150	360
0					* 18600	14450	* 13650	9600	* 10750	7100			8750	5650	8920
0					* 40300	31050	* 29500	20700	* 23250	15350			19250	12450	350
-1500			* 12350	* 12350	* 17900	14450	* 13500	9500	* 10600	7050			* 9100	6100	8420
-60			* 28150	* 28150	* 38800	31000	* 29250	20500	* 22900	15200			* 20050	13400	340
-3000			* 21350	* 21350	* 16250	14600	* 12500	9600	* 9450	7150			* 9250	7050	7600
-120			* 46450	* 46450	* 35200	31350	* 26950	20650					* 20300	15600	300
-4500			* 17000	* 17000	* 13200	* 13200	* 9850	* 9850					* 9000	* 9000	6330
-180			* 36550	* 36550	* 28300	* 28300	* 20600	* 20600					* 19700	* 19700	250

Illustration 86 g06281995

336 LC: 7560 kg (16667 lb) counterweight, 6.5 m (21 ft 4 inch) reach boom, 2.8 m (9 ft 2 inch) stick, 600 mm (24 inch) DG track shoes.

(mm) (inch)	1500 60		3000 120		4500 180		6000 240		7500 300		9000 360				
															(mm) (inch)
7500													* 9300	8400	7340
300													* 20600	18800	290
6000							* 10050	* 10050	* 9350	8050			* 8950	6850	8250
240							* 21850	* 21850	* 20500	17300			* 19700	15250	330
4500					* 14500	* 14500	* 11450	10950	* 9950	7850			* 8950	6050	8820
180					* 31150	* 31150	* 24750	23550	* 21650	16850			* 19700	13400	350
3000					* 18050	15550	* 13100	10400	* 10750	7550	8850	5800	8700	5650	9110
120					* 38800	33550	* 28250	22400	* 23350	16300			19150	12500	360
1500					* 16850	14750	* 14450	9900	11400	7300	8750	5650	8550	5550	9140
60					* 41000	31750	* 31200	21350	24550	15750			18800	12200	360
0					* 19800	14450	* 15100	9650	11200	7150			8750	5650	8920
0					* 44550	31150	* 32700	20750	24150	15350			19300	12450	350
-1500			* 13100	* 13100	* 19800	14450	* 14950	9550	11150	7050			9500	6100	8420
-60			* 29850	* 29850	* 42950	31100	* 32400	20550	24000	15250			20900	13450	340
-3000			* 23600	* 23600	* 18050	14600	* 13850	9600	* 10500	7150			* 10250	7050	7600
-120			* 51500	* 51500	* 39050	31450	* 29900	20700					* 22600	15650	300
-4500			* 18950	* 18950	* 14700	* 14700	* 10950	9900					* 10000	9250	6330
-180			* 40750	* 40750	* 31500	* 31500	* 22950	21450					* 21950	20800	250

Illustration 87 g06281214

336 LC: 7560 kg (16667 lb) counterweight, 6.5 m (21 ft 4 inch) reach boom, 2.8 m (9 ft 2 inch) stick, 600 mm (24 inch) DG track shoes heavy lift ON.

6.5 m (21 ft 4 inch) Extreme Service Reach Boom

2.8 m (9 ft 2 inch) Extreme Service Stick

(mm) (inch)	1500 60		3000 120		4500 180		6000 240		7500 300		9000 360				
kg / Lb															(mm) (inch)
7500													* 8400	8400	7340
300													* 18550	* 18550	290
6000							* 9000	* 9000	* 8350	8050			* 8150	6850	8250
240							* 19550	* 19550	* 18250	17250			* 17950	15200	330
4500					* 13000	* 13000	* 10200	* 10200	* 8850	7850			* 8150	6050	8820
180					* 27900	* 27900	* 22050	* 22050	* 19200	16850			* 17950	13350	350
3000					* 16100	15550	* 11650	10350	* 9550	7550	* 8450	5750	* 8400	5650	9110
120					* 34600	33550	* 25150	22350	* 20700	16200			* 18450	12400	360
1500					* 15850	14650	* 12850	9850	* 10200	7250	* 8650	5600	8550	5500	9140
60					* 38650	31600	* 27750	21250	* 22100	15650			18800	12050	360
0					* 18300	14400	* 13400	9550	* 10550	7100			* 8750	5600	8920
0					* 39650	30950	* 29050	20600	* 22850	15250			* 19250	12350	350
-1500			* 12300	* 12300	* 17600	14350	* 13300	9450	* 10400	7000			* 8950	6050	8420
-60			* 28050	* 28050	* 38150	30900	* 28750	20400	* 22500	15100			* 19700	13300	340
-3000			* 21000	* 21000	* 16000	14550	* 12250	9550	* 9250	7100			* 9050	7000	7600
-120			* 45600	* 45600	* 34600	31300	* 26450	20550					* 19900	15500	300
-4500			* 16650	* 16650	* 12950	* 12950	* 9650	* 9650					* 8800	* 8800	6330
-180			* 35800	* 35800	* 27750	* 27750	* 20150	* 20150					* 19250	* 19250	250

Illustration 88 g06281223

336 LC: 7560 kg (16667 lb) counterweight, 6.5 m (21 ft 4 inch) extreme service reach boom, 2.8 m (9 ft 2 inch) extreme service stick, 850 mm (33 inch) TG track shoes.

(mm) (inch)	1500 60		3000 120		4500 180		6000 240		7500 300		9000 360				
kg / Lb															(mm) (inch)
7500													* 9250	8400	7340
300													* 20500	18850	290
6000							* 9950	* 9950	* 9250	8050			* 8900	6850	8250
240							* 21600	* 21600	* 20200	17250			* 19650	15200	330
4500					* 14350	* 14350	* 11300	10950	* 9800	7850			* 8900	6050	8820
180					* 30800	* 30800	* 24400	23600	* 21300	16850			* 19600	13350	350
3000					* 17850	15550	* 12900	10350	* 10600	7550	8850	5750	8700	5650	9110
120					* 38300	33550	* 27850	22350	* 23000	16200			19200	12400	360
1500					* 16800	14650	* 14250	9850	* 11300	7250	8750	5600	8550	5500	9140
60					* 40950	31600	* 30750	21250	* 24550	15650			18800	12050	360
0					* 19800	14400	* 14900	9550	11200	7100			8750	5600	8920
0					* 43950	30950	* 32200	20600	24150	15250			19300	12350	350
-1500			* 13050	* 13050	* 19500	14350	* 14750	9450	11150	7000			9500	6050	8420
-60			* 29750	* 29750	* 42350	30900	* 31900	20400	24000	15100			20900	13300	340
-3000			* 23300	* 23300	* 17750	14550	* 13650	9550	* 10350	7100			* 10100	7000	7600
-120			* 50700	* 50700	* 38450	31300	* 29400	20550					* 22200	15500	300
-4500			* 18600	* 18600	* 14450	* 14450	* 10750	9850					* 9800	9250	6330
-180			* 39950	* 39950	* 30950	* 30950	* 22550	21350					* 21550	20700	250

Illustration 89 g06281224

336 LC: 7560 kg (16667 lb) counterweight, 6.5 m (21 ft 4 inch) extreme service reach boom, 2.8 m (9 ft 2 inch) extreme service stick, 850 mm (33 inch) TG track shoes heavy lift ON.

(mm) (inch)	1500 60		3000 120		4500 180		6000 240		7500 300		9000 360				
kg / Lb															(mm) (inch)
7500													* 8400	8250	7340
300													* 18550	18500	290
6000							* 9000	* 9000	* 8350	7900			* 8150	6700	8250
240							* 19550	* 19550	* 18250	16950			* 17950	14900	330
4500					* 13000	* 13000	* 10200	* 10200	* 8850	7700			* 8150	5900	8820
180					* 27900	* 27900	* 22050	* 22050	* 19200	16500			* 17950	13100	350
3000					* 16100	15250	* 11650	10150	* 9550	7400	* 8450	5600	* 8400	5500	9110
120					* 34600	32900	* 25150	21900	* 20700	15900			* 18450	12150	360
1500					* 15850	14400	* 12850	9650	* 10200	7100	8550	5500	8350	5350	9140
60					* 38650	31000	* 27750	20850	* 22100	15350			18400	11800	360
0					* 18300	14100	* 13400	9400	* 10550	6950			8600	5500	8920
0					* 39650	30300	* 29050	20200	* 22850	14900			18900	12050	350
-1500			* 12300	* 12300	* 17600	14100	* 13300	9300	* 10400	6850			* 8950	5900	8420
-60			* 28050	* 28050	* 38150	30300	* 28750	20000	* 22500	14800			* 19700	13050	340
-3000			* 21000	* 21000	* 16000	14250	* 12250	9350	* 9250	6950			* 9050	6850	7600
-120			* 45600	* 45600	* 34600	30650	* 26450	20150					* 19900	15200	300
-4500			* 16650	* 16650	* 12950	* 12950	* 9650	* 9650					* 8800	* 8800	6330
-180			* 35800	* 35800	* 27750	* 27750	* 20150	* 20150					* 19250	* 19250	250

Illustration 90 g06281221

336 LC: 7560 kg (16667 lb) counterweight, 6.5 m (21 ft 4 inch) extreme service reach boom, 2.8 m (9 ft 2 inch) extreme service stick, 700 mm (28 inch) TG track shoes.

(mm) (inch)	1500 60		3000 120		4500 180		6000 240		7500 300		9000 360				
kg / Lb															(mm) (inch)
7500													* 8400	8250	7340
300													* 18550	18500	290
6000							* 9000	* 9000	* 8350	7900			* 8150	6700	8250
240							* 19550	* 19550	* 18250	16950			* 17950	14900	330
4500					* 13000	* 13000	* 10200	* 10200	* 8850	7700			* 8150	5900	8820
180					* 27900	* 27900	* 22050	* 22050	* 19200	16500			* 17950	13100	350
3000					* 16100	15250	* 11650	10150	* 9550	7400	* 8450	5600	* 8400	5500	9110
120					* 34600	32900	* 25150	21900	* 20700	15900			* 18450	12150	360
1500					* 15850	14400	* 12850	9650	* 10200	7100	8550	5500	8350	5350	9140
60					* 38650	31000	* 27750	20850	* 22100	15350			18400	11800	360
0					* 18300	14100	* 13400	9400	* 10550	6950			8600	5500	8920
0					* 39650	30300	* 29050	20200	* 22850	14900			18900	12050	350
-1500			* 12300	* 12300	* 17600	14100	* 13300	9300	* 10400	6850			* 8950	5900	8420
-60			* 28050	* 28050	* 38150	30300	* 28750	20000	* 22500	14800			* 19700	13050	340
-3000			* 21000	* 21000	* 16000	14250	* 12250	9350	* 9250	6950			* 9050	6850	7600
-120			* 45600	* 45600	* 34600	30650	* 26450	20150					* 19900	15200	300
-4500			* 16650	* 16650	* 12950	* 12950	* 9650	* 9650					* 8800	* 8800	6330
-180			* 35800	* 35800	* 27750	* 27750	* 20150	* 20150					* 19250	* 19250	250

Illustration 91 g06281221

336 LC: 7560 kg (16667 lb) counterweight, 6.5 m (21 ft 4 inch) extreme service reach boom, 2.8 m (9 ft 2 inch) extreme service stick, 700 mm (28 inch) TG track shoes heavy lift ON.

(mm) (inch)	1500 60		3000 120		4500 180		6000 240		7500 300		9000 360				
kg / Lb															(mm) (inch)
7500													* 8400	8150	7340
300													* 18550	18350	290
6000							* 9000	* 9000	* 8350	7850			* 8150	6650	8250
240							* 19550	* 19550	* 18250	16800			* 17950	14800	330
4500					* 13000	* 13000	* 10200	* 10200	* 8850	7600			* 8150	5850	8820
180					* 27900	* 27900	* 22050	* 22050	* 19200	16400			* 17950	12950	350
3000					* 16100	15150	* 11650	10100	* 9550	7350	* 8450	5550	* 8400	5450	9110
120					* 34600	32650	* 25150	21750	* 20700	15750			* 18450	12050	360
1500					* 15850	14250	* 12850	9600	* 10200	7050	8450	5450	8300	5300	9140
60					* 38650	30750	* 27750	20700	* 22100	15200			18200	11700	360
0					* 18300	14000	* 13400	9300	* 10550	6850			8500	5450	8920
0					* 39650	30050	* 29050	20050	* 22850	14800			18700	11950	350
-1500			* 12300	* 12300	* 17600	13950	* 13300	9200	* 10400	6800			* 8950	5850	8420
-60			* 28050	* 28050	* 38150	30000	* 28750	19800	* 22500	14650			* 19700	12900	340
-3000			* 21000	* 21000	* 16000	14150	* 12250	9250	* 9250	6900			* 9050	6800	7600
-120			* 45600	* 45600	* 34600	30400	* 26450	20000					* 19900	15050	300
-4500			* 16650	* 16650	* 12950	* 12950	* 9650	9600					* 8800	* 8800	6330
-180			* 35800	* 35800	* 27750	* 27750	* 20150	* 20150					* 19250	* 19250	250

Illustration 92 g06281218

336 LC: 7560 kg (16667 lb) counterweight, 6.5 m (21 ft 4 inch) extreme service reach boom, 2.8 m (9 ft 2 inch) extreme service stick, 600 mm (24 inch) TG track shoes.

(mm) (inch)	1500 60		3000 120		4500 180		6000 240		7500 300		9000 360				
kg / Lb															(mm) (inch)
7500													* 9250	8150	7340
300													* 20500	18350	290
6000							* 9950	* 9950	* 9250	7850			* 8900	6650	8250
240							* 21600	* 21600	* 20200	16800			* 19650	14800	330
4500					* 14350	* 14350	* 11300	10700	* 9800	7600			* 8900	5850	8820
180					* 30800	* 30800	* 24400	23000	* 21300	16400			* 19600	12950	350
3000					* 17850	15150	* 12900	10100	* 10600	7350	8600	5550	8450	5450	9110
120					* 38300	32650	* 27850	21750	* 23000	15750			18600	12050	360
1500					* 16800	14250	* 14250	9600	11100	7050	8450	5450	8300	5300	9140
60					* 40950	30750	* 30750	20700	23850	15200			18200	11700	360
0					* 19800	14000	* 14900	9300	10900	6850			8500	5450	8920
0					* 43950	30050	* 32200	20050	23400	14800			18700	11950	350
-1500			* 13050	* 13050	* 19500	13950	* 14750	9200	10800	6800			9200	5850	8420
-60			* 29750	* 29750	* 42350	30000	* 31900	19800	23250	14650			20300	12900	340
-3000			* 23300	* 23300	* 17750	14150	* 13650	9250	* 10350	6900			* 10100	6800	7600
-120			* 50700	* 50700	* 38450	30400	* 29400	20000					* 22200	15050	300
-4500			* 18600	* 18600	* 14450	* 14450	* 10750	9600					* 9800	8950	6330
-180			* 39950	* 39950	* 30950	* 30950	* 22550	20750					* 21550	20100	250

Illustration 93 g06281219

336 LC: 7560 kg (16667 lb) counterweight, 6.5 m (21 ft 4 inch) extreme service reach boom, 2.8 m (9 ft 2 inch) extreme service stick, 600 mm (24 inch) TG track shoes heavy lift ON.

(mm) (inch)	1500 60		3000 120		4500 180		6000 240		7500 300		9000 360				
kg / Lb															(mm) (inch)
7500													* 8400	8300	7340
300													* 18550	* 18550	290
6000							* 9000	* 9000	* 8350	7950			* 8150	6750	8250
240							* 19550	* 19550	* 18250	17050			* 17950	15000	330
4500					* 13000	* 13000	* 10200	* 10200	* 8850	7750			* 8150	5950	8820
180					* 27900	* 27900	* 22050	* 22050	* 19200	16650			* 17950	13150	350
3000					* 16100	15350	* 11650	10250	* 9550	7450	* 8450	5650	* 8400	5550	9110
120					* 34600	33150	* 25150	22050	* 20700	16000			* 18450	12250	360
1500					* 15850	14500	* 12850	9750	* 10200	7150	8600	5550	8400	5400	9140
60					* 38650	31200	* 27750	21000	* 22100	15450			18550	11900	360
0					* 18300	14200	* 13400	9450	* 10550	7000			8650	5550	8920
0					* 39650	30550	* 29050	20350	* 22850	15050			19000	12150	350
-1500			* 12300	* 12300	* 17600	14200	* 13300	9350	* 10400	6900			* 8950	5950	8420
-60			* 28050	* 28050	* 38150	30500	* 28750	20150	* 22500	14900			* 19700	13150	340
-3000			* 21000	* 21000	* 16000	14350	* 12250	9400	* 9250	7000			* 9050	6900	7600
-120			* 45600	* 45600	* 34600	30850	* 26450	20300					* 19900	15300	300
-4500			* 16650	* 16650	* 12950	* 12950	* 9650	* 9650					* 8800	* 8800	6330
-180			* 35800	* 35800	* 27750	* 27750	* 20150	* 20150					* 19250	* 19250	250

Illustration 94 g06281228

336 LC: 7560 kg (16667 lb) counterweight, 6.5 m (21 ft 4 inch) extreme service reach boom, 2.8 m (9 ft 2 inch) extreme service stick, 600 mm (24 inch) heavy-duty TG track shoes.

(mm) (inch)	1500 60		3000 120		4500 180		6000 240		7500 300		9000 360				
kg / Lb															(mm) (inch)
7500													* 9250	8300	7340
300													* 20500	18600	290
6000							* 9950	* 9950	* 9250	7950			* 8900	6750	8250
240							* 21600	* 21600	* 20200	17050			* 19650	15000	330
4500					* 14350	* 14350	* 11300	10850	* 9800	7750			* 8900	5950	8820
180					* 30800	* 30800	* 24400	23350	* 21300	16650			* 19600	13150	350
3000					* 17850	15350	* 12900	10250	* 10600	7450	8750	5650	8600	5550	9110
120					* 38300	33150	* 27850	22050	* 23000	16000			18900	12250	360
1500					* 16800	14500	* 14250	9750	11250	7150	8600	5550	8400	5400	9140
60					* 40950	31200	* 30750	21000	24250	15450			18550	11900	360
0					* 19800	14200	* 14900	9450	11050	7000			8650	5550	8920
0					* 43950	30550	* 32200	20350	23800	15050			19000	12150	350
-1500			* 13050	* 13050	* 19500	14200	* 14750	9350	11000	6900			9350	5950	8420
-60			* 29750	* 29750	* 42350	30500	* 31900	20150	23650	14900			20650	13150	340
-3000			* 23300	* 23300	* 17750	14350	* 13650	9400	* 10350	7000			* 10100	6900	7600
-120			* 50700	* 50700	* 38450	30850	* 29400	20300					* 22200	15300	300
-4500			* 18600	* 18600	* 14450	* 14450	* 10750	9750					* 9800	9100	6330
-180			* 39950	* 39950	* 30950	* 30950	* 22550	21050					* 21550	20450	250

Illustration 95 g06281229

336 LC: 7560 kg (16667 lb) counterweight, 6.5 m (21 ft 4 inch) extreme service reach boom, 2.8 m (9 ft 2 inch) extreme service stick, 600 mm (24 inch) heavy-duty TG track shoes heavy lift ON.

(mm) (inch)	1500 60		3000 120		4500 180		6000 240		7500 300		9000 360				
kg / Lb															(mm) (inch)
7500													* 8400	8300	7340
300													* 18550	* 18550	290
6000							* 9000	* 9000	* 8350	7950			* 8150	6750	8250
240							* 19550	* 19550	* 18250	17100			* 17950	15050	330
4500					* 13000	* 13000	* 10200	* 10200	* 8850	7750			* 8150	5950	8820
180					* 27900	* 27900	* 22050	* 22050	* 19200	16650			* 17950	13200	350
3000					* 16100	15400	* 11650	10250	* 9550	7450	* 8450	5650	* 8400	5550	9110
120					* 34600	33200	* 25150	22100	* 20700	16050			* 18450	12250	360
1500					* 15850	14500	* 12850	9750	* 10200	7200	8650	5550	8450	5450	9140
60					* 38650	31300	* 27750	21050	* 22100	15500			18600	11950	360
0					* 18300	14250	* 13400	9450	* 10550	7000			8650	5550	8920
0					* 39650	30600	* 29050	20400	* 22850	15050			19050	12200	350
-1500			* 12300	* 12300	* 17600	14200	* 13300	9350	* 10400	6950			* 8950	5950	8420
-60			* 28050	* 28050	* 38150	30600	* 28750	20200	* 22500	14950			* 19700	13150	340
-3000			* 21000	* 21000	* 16000	14400	* 12250	9450	* 9250	7050			* 9050	6950	7600
-120			* 45600	* 45600	* 34600	30950	* 26450	20350					* 19900	15350	300
-4500			* 16650	* 16650	* 12950	* 12950	* 9650	* 9650					* 8800	* 8800	6330
-180			* 35800	* 35800	* 27750	* 27750	* 20150	* 20150					* 19250	* 19250	250

Illustration 96 g06281225

336 LC: 7560 kg (16667 lb) counterweight, 6.5 m (21 ft 4 inch) extreme service reach boom, 2.8 m (9 ft 2 inch) extreme service stick, 600 mm (24 inch) DG track shoes.

(mm) (inch)	1500 60		3000 120		4500 180		6000 240		7500 300		9000 360				
kg / Lb															(mm) (inch)
7500													* 9250	8300	7340
300													* 20500	18650	290
6000							* 9950	* 9950	* 9250	7950			* 8900	6750	8250
240							* 21600	* 21600	* 20200	17100			* 19650	15050	330
4500					* 14350	* 14350	* 11300	10850	* 9800	7750			* 8900	5950	8820
180					* 30800	* 30800	* 24400	23400	* 21300	16650			* 19600	13200	350
3000					* 17850	15400	* 12900	10250	* 10600	7450	8750	5650	8600	5550	9110
120					* 38300	33200	* 27850	22100	* 23000	16050			18950	12250	360
1500					* 16800	14500	* 14250	9750	11300	7200	8650	5550	8450	5450	9140
60					* 40950	31300	* 30750	21050	24300	15500			18600	11950	360
0					* 19800	14250	* 14900	9450	11100	7000			8650	5550	8920
0					* 43950	30600	* 32200	20400	23850	15050			19050	12200	350
-1500			* 13050	* 13050	* 19500	14200	* 14750	9350	11000	6950			9400	5950	8420
-60			* 29750	* 29750	* 42350	30600	* 31900	20200	23700	14950			20700	13150	340
-3000			* 23300	* 23300	* 17750	14400	* 13650	9450	* 10350	7050			* 10100	6950	7600
-120			* 50700	* 50700	* 38450	30950	* 29400	20350					* 22200	15350	300
-4500			* 18600	* 18600	* 14450	* 14450	* 10750	9750					* 9800	9150	6330
-180			* 39950	* 39950	* 30950	* 30950	* 22550	21100					* 21550	20500	250

Illustration 97 g06281227

336 LC: 7560 kg (16667 lb) counterweight, 6.5 m (21 ft 4 inch) extreme service reach boom, 2.8 m (9 ft 2 inch) extreme service stick, 600 mm (24 inch) DG track shoes heavy lift ON.

6.5 m (21 ft 4 inch) Reach Boom

3.2 m (10 ft 6 inch) Stick

(mm) (inch)	1500 60		3000 120		4500 180		6000 240		7500 300		9000 360				
kg / Lb															(mm) (inch)
7500									* 7900	* 7900			* 6700	* 6700	7700
300													* 14850	* 14850	300
6000									* 8000	* 8000			* 6500	* 6500	8580
240									* 17450	* 17450			* 14350	* 14350	340
4500					* 12200	* 12200	* 9800	* 9800	* 8600	7950	* 7700	5950	* 6550	5850	9130
180							* 21200	* 21200	* 18650	17150			* 14450	12900	360
3000					* 15450	* 15450	* 11350	10550	* 9350	7650	* 8300	5850	* 6800	5450	9410
120					* 33150	* 33150	* 24500	22750	* 20300	16500	* 18050	12550	* 15000	12000	370
1500					* 17750	15000	* 12700	10050	* 10100	7400	* 8600	5700	* 7300	5300	9440
60					* 38300	32350	* 27400	21650	* 21900	15900	* 18700	12250	* 16050	11700	380
0					* 18500	14600	* 13450	9700	* 10600	7200	8700	5600	* 8100	5400	9220
0					* 40100	31400	* 29150	20950	* 22950	15450	18750	12050	* 17850	11900	370
-1500			* 13250	* 13250	* 18150	14500	* 13550	9600	* 10650	7100			* 8800	5800	8750
-60			* 29950	* 29950	* 39300	31200	* 29300	20650	* 23000	15250			* 19400	12750	350
-3000			* 20900	* 20900	* 16800	14600	* 12800	9600	* 9900	7100			* 9050	6600	7960
-120			* 47350	* 47350	* 36400	31450	* 27600	20700	* 21200	15350			* 19900	14650	320
-4500			* 18850	* 18850	* 14200	* 14200	* 10750	9850					* 9050	8400	6750
-180			* 40600	* 40600	* 30500	* 30500	* 22850	21200					* 19900	18850	270

Illustration 98 g06281251

336 LC: 7560 kg (16667 lb) counterweight, 6.5 m (21 ft 4 inch) reach boom, 3.2 m (10 ft 6 inch) stick, 850 mm (33 inch) TG track shoes.

(mm) (inch)	1500 60		3000 120		4500 180		6000 240		7500 300		9000 360				
kg / Lb															(mm) (inch)
7500									* 8700	8250			* 7350	* 7350	7700
300													* 16250	* 16250	300
6000									* 8850	8200			* 7150	6550	8580
240									* 19350	17600			* 15700	14550	340
4500					* 13450	* 13450	* 10850	* 10850	* 9500	7950	* 8450	5950	* 7200	5850	9130
180							* 23450	* 23450	* 20650	17150			* 15800	12900	360
3000					* 17050	15950	* 12550	10550	* 10400	7650	8950	5850	* 7450	5450	9410
120					* 36650	34400	* 27100	22750	* 22550	16500	19250	12550	* 16400	12000	370
1500					* 19650	15000	* 14050	10050	* 11200	7400	8800	5700	* 8000	5300	9440
60					* 42400	32350	* 30350	21650	* 24300	15900	18950	12250	* 17600	11700	380
0					* 20500	14600	* 14900	9700	11300	7200	8700	5600	8400	5400	9220
0					* 44400	31400	* 32300	20950	24350	15450	18750	12050	18500	11900	370
-1500			* 14050	* 14050	* 20100	14500	* 15000	9600	11200	7100			9050	5800	8750
-60			* 31750	* 31750	* 43550	31200	* 32500	20650	24100	15250			19900	12750	350
-3000			* 22150	* 22150	* 18650	14600	* 14200	9600	* 11000	7100			* 10050	6600	7960
-120			* 50150	* 50150	* 40350	31450	* 30650	20700	* 23550	15350			* 22150	14650	320
-4500			* 20950	* 20950	* 15800	14950	* 11950	9850					* 10100	8400	6750
-180			* 45150	* 45150	* 33950	32150	* 25450	21200					* 22200	18850	270

Illustration 99 g06281253

336 LC: 7560 kg (16667 lb) counterweight, 6.5 m (21 ft 4 inch) reach boom, 3.2 m (10 ft 6 inch) stick, 850 mm (33 inch) TG track shoes heavy lift ON.

(mm) (inch)	1500 60		3000 120		4500 180		6000 240		7500 300		9000 360				
kg / Lb															(mm) (inch)
7500									* 7900	* 7900			* 6700	* 6700	7700
300													* 14850	* 14850	300
6000									* 8000	* 8000			* 6500	6450	8580
240									* 17450	17300			* 14350	14250	340
4500					* 12200	* 12200	* 9800	* 9800	* 8600	7800	* 7700	5850	* 6550	5700	9130
180							* 21200	* 21200	* 18650	16800			* 14450	12650	360
3000					* 15450	* 15450	* 11350	10350	* 9350	7500	* 8300	5750	* 6800	5350	9410
120					* 33150	* 33150	* 24500	22350	* 20300	16200	* 18050	12300	* 15000	11750	370
1500					* 17750	14700	* 12700	9850	* 10100	7250	* 8600	5600	* 7300	5200	9440
60					* 38300	31700	* 27400	21250	* 21900	15600	18550	12000	* 16050	11450	380
0					* 18500	14300	* 13450	9550	* 10600	7050	8500	5500	* 8100	5300	9220
0					* 40100	30750	* 29150	20500	* 22950	15150	18350	11800	* 17850	11650	370
-1500			* 13250	* 13250	* 18150	14200	* 13550	9400	* 10650	6950			* 8800	5650	8750
-60			* 29950	* 29950	* 39300	30550	* 29300	20200	* 23000	14950			* 19400	12500	350
-3000			* 20900	* 20900	* 16800	14350	* 12800	9400	* 9900	6950			* 9050	6500	7960
-120			* 47350	* 47350	* 36400	30800	* 27600	20300	* 21200	15050			* 19900	14350	320
-4500			* 18850	* 18850	* 14200	* 14200	* 10750	9650					* 9050	8250	6750
-180			* 40600	* 40600	* 30500	* 30500	* 22850	20800					* 19900	18450	270

Illustration 100 g06281247

336 LC: 7560 kg (16667 lb) counterweight, 6.5 m (21 ft 4 inch) reach boom, 3.2 m (10 ft 6 inch) stick, 700 mm (28 inch) TG track shoes.

(mm) (inch)	1500 60		3000 120		4500 180		6000 240		7500 300		9000 360				
kg / Lb															(mm) (inch)
7500									* 8700	8100			* 7350	* 7350	7700
300													* 16250	* 16250	300
6000									* 8850	8050			* 7150	6450	8580
240									* 19350	17300			* 15700	14250	340
4500					* 13450	* 13450	* 10850	* 10850	* 9500	7800	* 8450	5850	* 7200	5700	9130
180							* 23450	* 23450	* 20650	16800			* 15800	12650	360
3000					* 17050	15650	* 12550	10350	* 10400	7500	8800	5750	* 7450	5350	9410
120					* 36650	33800	* 27100	22350	* 22550	16200	18850	12300	* 16400	11750	370
1500					* 19650	14700	* 14050	9850	* 11200	7250	8650	5600	* 8000	5200	9440
60					* 42400	31700	* 30350	21250	24300	15600	18550	12000	* 17600	11450	380
0					* 20500	14300	* 14900	9550	11050	7050	8500	5500	8250	5300	9220
0					* 44400	30750	* 32300	20500	23800	15150	18350	11800	18100	11650	370
-1500			* 14050	* 14050	* 20100	14200	* 15000	9400	10950	6950			8850	5650	8750
-60			* 31750	* 31750	* 43550	30550	* 32500	20200	23600	14950			19500	12500	350
-3000			* 22150	* 22150	* 18650	14350	* 14200	9400	* 11000	6950			* 10050	6500	7960
-120			* 50150	* 50150	* 40350	30800	* 30650	20300	* 23550	15050			* 22150	14350	320
-4500			* 20950	* 20950	* 15800	14650	* 11950	9650					* 10100	8250	6750
-180			* 45150	* 45150	* 33950	31500	* 25450	20800					* 22200	18450	270

Illustration 101 g06282031

336 LC: 7560 kg (16667 lb) counterweight, 6.5 m (21 ft 4 inch) reach boom, 3.2 m (10 ft 6 inch) stick, 700 mm (28 inch) TG track shoes heavy lift ON.

(mm) (inch)	1500 60		3000 120		4500 180		6000 240		7500 300		9000 360				
kg / Lb															(mm) (inch)
7500									* 7900	* 7900			* 6700	* 6700	7700
300													* 14850	* 14850	300
6000									* 8000	8000			* 6500	6350	8580
240									* 17450	17150			* 14350	14150	340
4500					* 12200	* 12200	* 9800	* 9800	* 8600	7750	* 7700	5800	* 6550	5650	9130
180							* 21200	* 21200	* 18650	16700			* 14450	12500	360
3000					* 15450	* 15450	* 11350	10300	* 9350	7450	* 8300	5700	* 6800	5300	9410
120					* 33150	* 33150	* 24500	22150	* 20300	16050	* 18050	12200	* 15000	11650	370
1500					* 17750	14600	* 12700	9800	* 10100	7200	8550	5550	* 7300	5150	9440
60					* 38300	31450	* 27400	21050	* 21900	15450	18400	11900	* 16050	11350	380
0					* 18500	14200	* 13450	9450	* 10600	6950	8450	5450	* 8100	5250	9220
0					* 40100	30500	* 29150	20350	* 22950	15000	18150	11700	* 17850	11550	370
-1500			* 13250	* 13250	* 18150	14100	* 13550	9300	* 10650	6850			8750	5600	8750
-60			* 29950	* 29950	* 39300	30300	* 29300	20050	* 23000	14800			19300	12400	350
-3000			* 20900	* 20900	* 16800	14200	* 12800	9350	* 9900	6900			* 9050	6400	7960
-120			* 47350	* 47350	* 36400	30550	* 27600	20100	* 21200	14900			* 19900	14200	320
-4500			* 18850	* 18850	* 14200	* 14200	* 10750	9550					* 9050	8200	6750
-180			* 40600	* 40600	* 30500	* 30500	* 22850	20600					* 19900	18300	270

Illustration 102 g06281241

336 LC: 7560 kg (16667 lb) counterweight, 6.5 m (21 ft 4 inch) reach boom, 3.2 m (10 ft 6 inch) stick, 600 mm (24 inch) TG track shoes.

(mm) (inch)	1500 60		3000 120		4500 180		6000 240		7500 300		9000 360				
kg / Lb															(mm) (inch)
7500									* 8700	8050			* 7350	* 7350	7700
300													* 16250	* 16250	300
6000									* 8850	8000			* 7150	6350	8580
240									* 19350	17150			* 15700	14150	340
4500					* 13450	* 13450	* 10850	* 10850	* 9500	7750	* 8450	5800	* 7200	5650	9130
180							* 23450	23400	* 20650	16700			* 15800	12500	360
3000					* 17050	15550	* 12550	10300	* 10400	7450	8700	5700	* 7450	5300	9410
120					* 36650	33550	* 27100	22150	* 22550	16050	18700	12200	* 16400	11650	370
1500					* 19650	14600	* 14050	9800	11200	7200	8550	5550	7950	5150	9440
60					* 42400	31450	* 30350	21050	24100	15450	18400	11900	17550	11350	380
0					* 20500	14200	* 14900	9450	10950	6950	8450	5450	8150	5250	9220
0					* 44400	30500	* 32300	20350	23600	15000	18150	11700	17950	11550	370
-1500			* 14050	* 14050	* 20100	14100	* 15000	9300	10850	6850			8750	5600	8750
-60			* 31750	* 31750	* 43550	30300	* 32500	20050	23400	14800			19300	12400	350
-3000			* 22150	* 22150	* 18650	14200	* 14200	9350	10900	6900			* 10050	6400	7960
-120			* 50150	* 50150	* 40350	30550	* 30650	20100	23500	14900			* 22150	14200	320
-4500			* 20950	* 20950	* 15800	14500	* 11950	9550					* 10100	8200	6750
-180			* 45150	* 45150	* 33950	31250	* 25450	20600					* 22200	18300	270

Illustration 103 g06281245

336 LC: 7560 kg (16667 lb) counterweight, 6.5 m (21 ft 4 inch) reach boom, 3.2 m (10 ft 6 inch) stick, 600 mm (24 inch) TG track shoes heavy lift ON.

(mm) (inch)	1500 60		3000 120		4500 180		6000 240		7500 300		9000 360				(mm) (inch)
7500									* 7900	* 7900			* 6700	* 6700	7700
300													* 14850	* 14850	300
6000									* 8000	* 8000			* 6500	6450	8580
240									* 17450	17400			* 14350	* 14350	340
4500					* 12200	* 12200	* 9800	* 9800	* 8600	7850	* 7700	5900	* 6550	5750	9130
180							* 21200	* 21200	* 18650	16900			* 14450	12700	360
3000					* 15450	* 15450	* 11350	10450	* 9350	7550	* 8300	5750	* 6800	5400	9410
120					* 33150	* 33150	* 24500	22500	* 20300	16300	* 18050	12400	* 15000	11850	370
1500					* 17750	14800	* 12700	9950	* 10100	7300	* 8600	5650	* 7300	5250	9440
60					* 38300	31950	* 27400	21400	* 21900	15700	18700	12100	* 16050	11550	380
0					* 18500	14400	* 13450	9600	* 10600	7100	8600	5550	* 8100	5350	9220
0					* 40100	31000	* 29150	20650	* 22950	15250	18450	11900	* 17850	11750	370
-1500			* 13250	* 13250	* 18150	14300	* 13550	9450	* 10650	7000			* 8800	5700	8750
-60			* 29950	* 29950	* 39300	30800	* 29300	20350	* 23000	15050			* 19400	12600	350
-3000			* 20900	* 20900	* 16800	14450	* 12800	9500	* 9900	7050			* 9050	6550	7960
-120			* 47350	* 47350	* 36400	31050	* 27600	20450	* 21200	15150			* 19900	14450	320
-4500			* 18850	* 18850	* 14200	* 14200	* 10750	9700					* 9050	8300	6750
-180			* 40600	* 40600	* 30500	* 30500	* 22850	20950					* 19900	18600	270

Illustration 104 g06281259

336 LC: 7560 kg (16667 lb) counterweight, 6.5 m (21 ft 4 inch) reach boom, 3.2 m (10 ft 6 inch) stick, 600 mm (24 inch) heavy-duty TG track shoes.

(mm) (inch)	1500 60		3000 120		4500 180		6000 240		7500 300		9000 360				(mm) (inch)
7500									* 8700	8150			* 7350	* 7350	7700
300													* 16250	* 16250	300
6000									* 8850	8100			* 7150	6450	8580
240									* 19350	17400			* 15700	14350	340
4500					* 13450	* 13450	* 10850	* 10850	* 9500	7850	* 8450	5900	* 7200	5750	9130
180							* 23450	* 23450	* 20650	16900			* 15800	12700	360
3000					* 17050	15750	* 12550	10450	* 10400	7550	8850	5750	* 7450	5400	9410
120					* 36650	34000	* 27100	22500	* 22550	16300	19000	12400	* 16400	11850	370
1500					* 19650	14800	* 14050	9950	* 11200	7300	8700	5650	* 8000	5250	9440
60					* 42400	31950	* 30350	21400	* 24300	15700	18700	12100	* 17600	11550	380
0					* 20500	14400	* 14900	9600	11150	7100	8600	5550	8300	5350	9220
0					* 44400	31000	* 32300	20650	24000	15250	18450	11900	18250	11750	370
-1500			* 14050	* 14050	* 20100	14300	* 15000	9450	11050	7000			8900	5700	8750
-60			* 31750	* 31750	* 43550	30800	* 32500	20350	23750	15050			19650	12600	350
-3000			* 22150	* 22150	* 18650	14450	* 14200	9500	* 11000	7050			* 10050	6550	7960
-120			* 50150	* 50150	* 40350	31050	* 30650	20450	* 23550	15150			* 22150	14450	320
-4500			* 20950	* 20950	* 15800	14750	* 11950	9700					* 10100	8300	6750
-180			* 45150	* 45150	* 33950	31750	* 25450	20950					* 22200	18600	270

Illustration 105 g06281260

336 LC: 7560 kg (16667 lb) counterweight, 6.5 m (21 ft 4 inch) reach boom, 3.2 m (10 ft 6 inch) stick, 600 mm (24 inch) heavy-duty TG track shoes heavy lift ON.

(mm) (inch)	1500 60		3000 120		4500 180		6000 240		7500 300		9000 360				(mm) (inch)
7500									* 7900	* 7900			* 6700	* 6700	7700
300													* 14850	* 14850	300
6000									* 8000	* 8000			* 6500	6500	8580
240									* 17450	17450			* 14350	* 14350	340
4500					* 12200	* 12200	* 9800	* 9800	* 8600	7900	* 7700	5900	* 6550	5750	9130
180							* 21200	* 21200	* 18650	16950			* 14450	12750	360
3000					* 15450	* 15450	* 11350	10450	* 9350	7600	* 8300	5800	* 6800	5400	9410
120					* 33150	* 33150	* 24500	22550	* 20300	16350	* 18050	12400	* 15000	11900	370
1500					* 17750	14850	* 12700	9950	* 10100	7300	* 8600	5650	* 7300	5250	9440
60					* 38300	32000	* 27400	21450	* 21900	15750	* 18700	12150	* 16050	11600	380
0					* 18500	14450	* 13450	9600	* 10600	7100	8600	5550	* 8100	5350	9220
0					* 40100	31050	* 29150	20700	* 22950	15300	18500	11900	* 17850	11800	370
-1500			* 13250	* 13250	* 18150	14350	* 13550	9500	* 10650	7000			* 8800	5750	8750
-60			* 29950	* 29950	* 39300	30850	* 29300	20400	* 23000	15100			* 19400	12650	350
-3000			* 20900	* 20900	* 16800	14450	* 12800	9500	* 9900	7050			* 9050	6550	7960
-120			* 47350	* 47350	* 36400	31100	* 27600	20500	* 21200	15200			* 19900	14500	320
-4500			* 18850	* 18850	* 14200	* 14200	* 10750	9750					* 9050	8350	6750
-180			* 40600	* 40600	* 30500	* 30500	* 22850	21000					* 19900	18650	270

Illustration 106 g06281254

336 LC: 7560 kg (16667 lb) counterweight, 6.5 m (21 ft 4 inch) reach boom, 3.2 m (10 ft 6 inch) stick, 600 mm (24 inch) DG track shoes.

(mm) (inch)	1500 60		3000 120		4500 180		6000 240		7500 300		9000 360				(mm) (inch)
7500									* 8700	8200			* 7350	* 7350	7700
300													* 16250	* 16250	300
6000									* 8850	8100			* 7150	6500	8580
240									* 19350	17450			* 15700	14400	340
4500					* 13450	* 13450	* 10850	* 10850	* 9500	7900	* 8450	5900	* 7200	5750	9130
180							* 23450	* 23450	* 20650	16950			* 15800	12750	360
3000					* 17050	15800	* 12550	10450	* 10400	7600	8850	5800	* 7450	5400	9410
120					* 36650	34100	* 27100	22550	* 22550	16350	19050	12400	* 16400	11900	370
1500					* 19650	14850	* 14050	9950	* 11200	7300	8700	5650	* 8000	5250	9440
60					* 42400	32000	* 30350	21450	* 24300	15750	18750	12150	* 17600	11600	380
0					* 20500	14450	* 14900	9600	11200	7100	8600	5550	8300	5350	9220
0					* 44400	31050	* 32300	20700	24050	15300	18500	11900	18300	11800	370
-1500			* 14050	* 14050	* 20100	14350	* 15000	9500	11050	7000			8950	5750	8750
-60			* 31750	* 31750	* 43550	30850	* 32500	20400	23850	15100			19700	12650	350
-3000			* 22150	* 22150	* 18650	14450	* 14200	9500	* 11000	7050			* 10050	6550	7960
-120			* 50150	* 50150	* 40350	31100	* 30650	20500	* 23550	15200			* 22150	14500	320
-4500			* 20950	* 20950	* 15800	14750	* 11950	9750					* 10100	8350	6750
-180			* 45150	* 45150	* 33950	31800	* 25450	21000					* 22200	18650	270

Illustration 107 g06281257

336 LC: 7560 kg (16667 lb) counterweight, 6.5 m (21 ft 4 inch) reach boom, 3.2 m (10 ft 6 inch) stick, 600 mm (24 inch) DG track shoes heavy lift ON.

6.5 m (21 ft 4 inch) Extreme Service Reach Boom

3.2 m (10 ft 6 inch) Extreme Service Stick

(mm) (inch)	1500 60		3000 120		4500 180		6000 240		7500 300		9000 360				
kg / Lb															(mm) (inch)
7500									* 7750	* 7750			* 6650	* 6650	7700
300													* 14700	* 14700	300
6000									* 7850	* 7850			* 6450	6450	8580
240									* 17150	* 17150			* 14250	* 14250	340
4500					* 12050	* 12050	* 9650	* 9650	* 8400	7850	* 7650	5850	* 6500	5700	9130
180							* 20900	* 20900	* 18300	16900			* 14300	12650	360
3000					* 15200	* 15200	* 11150	10450	* 9200	7550	* 8100	5750	* 6750	5350	9410
120					* 32700	* 32700	* 24100	22500	* 19950	16250	* 17700	12300	* 14850	11750	370
1500					* 17500	14800	* 12450	9900	* 9950	7250	* 8450	5600	* 7250	5200	9440
60					* 37700	31850	* 26950	21350	* 21500	15600	* 18350	12000	* 15950	11450	380
0					* 18200	14350	* 13200	9550	* 10400	7050	8600	5450	* 8050	5300	9220
0					* 39450	30850	* 28600	20550	* 22550	15150	18450	11750	* 17750	11650	370
-1500			* 13200	* 13200	* 17850	14250	* 13300	9400	* 10400	6950			* 8600	5650	8750
-60			* 29850	* 29850	* 38650	30650	* 28750	20250	* 22550	14900			* 18950	12450	350
-3000			* 20850	* 20850	* 16500	14350	* 12550	9400	* 9700	6950			* 8850	6450	7960
-120			* 47250	* 47250	* 35700	30900	* 27100	20300	* 20750	15050			* 19450	14300	320
-4500			* 18450	* 18450	* 13900	* 13900	* 10500	9650					* 8850	8250	6750
-180			* 39750	* 39750	* 29900	* 29900	* 22350	20850					* 19450	18500	270

Illustration 108 g06281290

336 LC: 7560 kg (16667 lb) counterweight, 6.5 m (21 ft 4 inch) extreme service reach boom, 3.2 m (10 ft 6 inch) extreme service stick, 850 mm (33 inch) TG track shoes.

(mm) (inch)	1500 60		3000 120		4500 180		6000 240		7500 300		9000 360				
kg / Lb															(mm) (inch)
7500									* 8600	8200			* 7300	* 7300	7700
300													* 16100	* 16100	300
6000									* 8700	8100			* 7100	6450	8580
240									* 19050	17400			* 15600	14350	340
4500					* 13300	* 13300	* 10700	* 10700	* 9350	7850	* 8400	5850	* 7150	5700	9130
180							* 23100	* 23100	* 20350	16900			* 15700	12650	360
3000					* 16850	15800	* 12350	10450	* 10200	7550	8850	5750	* 7400	5350	9410
120					* 36150	34100	* 26700	22500	* 22150	16250	19050	12300	* 16300	11750	370
1500					* 19350	14800	* 13850	9900	* 11050	7250	8700	5600	* 7950	5200	9440
60					* 41750	31850	* 29900	21350	* 23900	15600	18700	12000	* 17450	11450	380
0					* 20200	14350	* 14700	9550	11200	7050	8600	5450	8300	5300	9220
0					* 43700	30850	* 31750	20550	24050	15150	18450	11750	18250	11650	370
-1500			* 14000	* 14000	* 19800	14250	* 14750	9400	11050	6950			8900	5650	8750
-60			* 31650	* 31650	* 42900	30650	* 31950	20250	23800	14900			19650	12450	350
-3000			* 22100	* 22100	* 18350	14350	* 13950	9400	* 10800	6950			* 9850	6450	7960
-120			* 50050	* 50050	* 39700	30900	* 30150	20300	* 23100	15050			* 21700	14300	320
-4500			* 20600	* 20600	* 15500	14700	* 11750	9650					* 9900	8250	6750
-180			* 44300	* 44300	* 33300	31650	* 24950	20850					* 21750	18500	270

Illustration 109 g06281294

336 LC: 7560 kg (16667 lb) counterweight, 6.5 m (21 ft 4 inch) extreme service reach boom, 3.2 m (10 ft 6 inch) extreme service stick, 850 mm (33 inch) TG track shoes heavy lift ON.

(mm) (inch)	1500 60		3000 120		4500 180		6000 240		7500 300		9000 360				
kg / Lb															(mm) (inch)
7500									* 7750	* 7750			* 6650	* 6650	7700
300													* 14700	* 14700	300
6000									* 7850	* 7850			* 6450	6350	8580
240									* 17150	17100			* 14250	14050	340
4500					* 12050	* 12050	* 9650	* 9650	* 8400	7700	* 7650	5750	* 6500	5600	9130
180							* 20900	* 20900	* 18300	16600			* 14300	12400	360
3000					* 15200	* 15200	* 11150	10250	* 9200	7400	* 8100	5600	* 6750	5250	9410
120					* 32700	* 32700	* 24100	22100	* 19950	15950	* 17700	12050	* 14850	11500	370
1500					* 17500	14500	* 12450	9700	* 9950	7100	* 8450	5450	* 7250	5100	9440
60					* 37700	31250	* 26950	20900	* 21500	15300	18300	11750	* 15950	11200	380
0					* 18200	14050	* 13200	9350	* 10400	6900	8400	5350	* 8050	5200	9220
0					* 39450	30250	* 28600	20150	* 22550	14800	18050	11500	* 17750	11400	370
-1500			* 13200	* 13200	* 17850	13950	* 13300	9200	* 10400	6800			* 8600	5550	8750
-60			* 29850	* 29850	* 38650	30000	* 28750	19800	* 22550	14600			* 18950	12200	350
-3000			* 20850	* 20850	* 16500	14100	* 12550	9250	* 9700	6800			* 8850	6350	7960
-120			* 47250	* 47250	* 35700	30300	* 27100	19850	* 20750	14700			* 19450	14000	320
-4500			* 18450	* 18450	* 13900	* 13900	* 10500	9450					* 8850	8100	6750
-180			* 39750	* 39750	* 29900	* 29900	* 22350	20400					* 19450	18150	270

Illustration 110 g06281278

336 LC: 7560 kg (16667 lb) counterweight, 6.5 m (21 ft 4 inch) extreme service reach boom, 3.2 m (10 ft 6 inch) extreme service stick, 700 mm (28 inch) TG track shoes.

(mm) (inch)	1500 60		3000 120		4500 180		6000 240		7500 300		9000 360				
kg / Lb															(mm) (inch)
7500									* 8600	8050			* 7300	* 7300	7700
300													* 16100	* 16100	300
6000									* 8700	7950			* 7100	6350	8580
240									* 19050	17100			* 15600	14050	340
4500					* 13300	* 13300	* 10700	* 10700	* 9350	7700	* 8400	5750	* 7150	5600	9130
180							* 23100	* 23100	* 20350	16600			* 15700	12400	360
3000					* 16850	15500	* 12350	10250	* 10200	7400	8700	5600	* 7400	5250	9410
120					* 36150	33450	* 26700	22100	* 22150	15950	18650	12050	* 16300	11500	370
1500					* 19350	14500	* 13850	9700	* 11050	7100	8500	5450	7950	5100	9440
60					* 41750	31250	* 29900	20900	* 23900	15300	18300	11750	* 17450	11200	380
0					* 20200	14050	* 14700	9350	10950	6900	8400	5350	8100	5200	9220
0					* 43700	30250	* 31750	20150	23550	14800	18050	11500	17850	11400	370
-1500			* 14000	* 14000	* 19800	13950	* 14750	9200	10800	6800			8700	5550	8750
-60			* 31650	* 31650	* 42900	30000	* 31950	19800	23300	14600			19200	12200	350
-3000			* 22100	* 22100	* 18350	14100	* 13950	9250	* 10800	6800			* 9850	6350	7960
-120			* 50050	* 50050	* 39700	30300	* 30150	19850	* 23100	14700			* 21700	14000	320
-4500			* 20600	* 20600	* 15500	14400	* 11750	9450					* 9900	8100	6750
-180			* 44300	* 44300	* 33300	31000	* 24950	20400					* 21750	18150	270

Illustration 111 g06281285

336 LC: 7560 kg (16667 lb) counterweight, 6.5 m (21 ft 4 inch) extreme service reach boom, 3.2 m (10 ft 6 inch) extreme service stick, 700 mm (28 inch) TG track shoes heavy lift ON.

(mm) (inch)	1500 60		3000 120		4500 180		6000 240		7500 300		9000 360				(mm) (inch)
7500									* 7750	* 7750			* 6650	* 6650	7700
300													* 14700	* 14700	300
6000									* 7850	* 7850			* 6450	6250	8580
240									* 17150	16950			* 14250	13950	340
4500					* 12050	* 12050	* 9650	* 9650	* 8400	7650	* 7650	5700	* 6500	5550	9130
180							* 20900	* 20900	* 18300	16450			* 14300	12300	360
3000					* 15200	* 15200	* 11150	10150	* 9200	7350	* 8100	5550	* 6750	5200	9410
120					* 32700	* 32700	* 24100	21900	* 19950	15800	* 17700	11950	* 14850	11400	370
1500					* 17500	14350	* 12450	9600	* 9950	7050	8450	5400	* 7250	5050	9440
60					* 37700	30950	* 26950	20750	* 21500	15150	18150	11650	* 15950	11100	380
0					* 18200	13950	* 13200	9250	* 10400	6800	8300	5300	8050	5150	9220
0					* 39450	30000	* 28600	19950	* 22550	14700	17900	11400	17700	11300	370
-1500			* 13200	* 13200	* 17850	13850	* 13300	9100	* 10400	6700			* 8600	5500	8750
-60			* 29850	* 29850	* 38650	29750	* 28750	19650	* 22550	14450			* 18950	12100	350
-3000			* 20850	* 20850	* 16500	13950	* 12550	9150	* 9700	6750			* 8850	6300	7960
-120			* 47250	* 47250	* 35700	30000	* 27100	19700	* 20750	14600			* 19450	13900	320
-4500			* 18450	* 18450	* 13900	* 13900	* 10500	9400					* 8850	8050	6750
-180			* 39750	* 39750	* 29900	* 29900	* 22350	20250					* 19450	18000	270

Illustration 112 g06281272

336 LC: 7560 kg (16667 lb) counterweight, 6.5 m (21 ft 4 inch) extreme service reach boom, 3.2 m (10 ft 6 inch) extreme service stick, 600 mm (24 inch) TG track shoes.

(mm) (inch)	1500 60		3000 120		4500 180		6000 240		7500 300		9000 360				(mm) (inch)
7500									* 8600	7950			* 7300	* 7300	7700
300													* 16100	* 16100	300
6000									* 8700	7900			* 7100	6250	8580
240									* 19050	16950			* 15600	13950	340
4500					* 13300	* 13300	* 10700	* 10700	* 9350	7650	* 8400	5700	* 7150	5550	9130
180							* 23100	* 23100	* 20350	16450			* 15700	12300	360
3000					* 16850	15400	* 12350	10150	* 10200	7350	8600	5550	* 7400	5200	9410
120					* 36150	33200	* 26700	21900	* 22150	15800	18500	11950	* 16300	11400	370
1500					* 19350	14350	* 13850	9600	* 11050	7050	8450	5400	7850	5050	9440
60					* 41750	30950	* 29900	20750	23850	15150	18150	11650	17300	11100	380
0					* 20200	13950	* 14700	9250	10850	6800	8300	5300	8050	5150	9220
0					* 43700	30000	* 31750	19950	23300	14700	17900	11400	17700	11300	370
-1500			* 14000	* 14000	* 19800	13850	* 14750	9100	10750	6700			8650	5500	8750
-60			* 31650	* 31650	* 42900	29750	* 31950	19650	23100	14450			19050	12100	350
-3000			* 22100	* 22100	* 18350	13950	* 13950	9150	10750	6750			* 9850	6300	7960
-120			* 50050	* 50050	* 39700	30000	* 30150	19700	* 23100	14600			* 21700	13900	320
-4500			* 20600	* 20600	* 15500	14300	* 11750	9400					* 9900	8050	6750
-180			* 44300	* 44300	* 33300	30750	* 24950	20250					* 21750	18000	270

Illustration 113 g06281274

336 LC: 7560 kg (16667 lb) counterweight, 6.5 m (21 ft 4 inch) extreme service reach boom, 3.2 m (10 ft 6 inch) extreme service stick, 600 mm (24 inch) TG track shoes heavy lift ON.

(mm) (inch)	1500 60		3000 120		4500 180		6000 240		7500 300		9000 360				
kg / Lb															(mm) (inch)
7500									* 7750	* 7750			* 6650	* 6650	7700
300													* 14700	* 14700	300
6000									* 7850	* 7850			* 6450	6350	8580
240									* 17150	* 17150			* 14250	14150	340
4500					* 12050	* 12050	* 9650	* 9650	* 8400	7750	* 7650	5800	* 6500	5650	9130
180							* 20900	* 20900	* 18300	16700			* 14300	12500	360
3000					* 15200	* 15200	* 11150	10300	* 9200	7450	* 8100	5650	* 6750	5250	9410
120					* 32700	* 32700	* 24100	22250	* 19950	16050	* 17700	12150	* 14850	11600	370
1500					* 17500	14600	* 12450	9750	* 9950	7150	* 8450	5500	* 7250	5150	9440
60					* 37700	31450	* 26950	21050	* 21500	15400	* 18350	11800	* 15950	11300	380
0					* 18200	14150	* 13200	9400	* 10400	6950	8450	5400	* 8050	5200	9220
0					* 39450	30450	* 28600	20300	* 22550	14950	18200	11600	* 17750	11450	370
-1500			* 13200	* 13200	* 17850	14050	* 13300	9250	* 10400	6850			* 8600	5600	8750
-60			* 29850	* 29850	* 38650	30250	* 28750	19950	* 22550	14700			* 18950	12300	350
-3000			* 20850	* 20850	* 16500	14200	* 12550	9300	* 9700	6850			* 8850	6400	7960
-120			* 47250	* 47250	* 35700	30500	* 27100	20000	* 20750	14850			* 19450	14150	320
-4500			* 18450	* 18450	* 13900	* 13900	* 10500	9550					* 8850	8150	6750
-180			* 39750	* 39750	* 29900	* 29900	* 22350	20550					* 19450	18250	270

Illustration 114 g06281299

336 LC: 7560 kg (16667 lb) counterweight, 6.5 m (21 ft 4 inch) extreme service reach boom, 3.2 m (10 ft 6 inch) extreme service stick, 600 mm (24 inch) heavy-duty TG track shoes.

(mm) (inch)	1500 60		3000 120		4500 180		6000 240		7500 300		9000 360				
kg / Lb															(mm) (inch)
7500									* 8600	8100			* 7300	* 7300	7700
300													* 16100	* 16100	300
6000									* 8700	8000			* 7100	6350	8580
240									* 19050	17200			* 15600	14150	340
4500					* 13300	* 13300	* 10700	* 10700	* 9350	7750	* 8400	5800	* 7150	5650	9130
180							* 23100	* 23100	* 20350	16700			* 15700	12500	360
3000					* 16850	15600	* 12350	10300	* 10200	7450	8750	5650	* 7400	5250	9410
120					* 36150	33700	* 26700	22250	* 22150	16050	18800	12150	* 16300	11600	370
1500					* 19350	14600	* 13850	9750	* 11050	7150	8600	5500	* 7950	5150	9440
60					* 41750	31450	* 29900	21050	* 23900	15400	18450	11800	* 17450	11300	380
0					* 20200	14150	* 14700	9400	11000	6950	8450	5400	8200	5200	9220
0					* 43700	30450	* 31750	20300	23700	14950	18200	11600	18000	11450	370
-1500			* 14000	* 14000	* 19800	14050	* 14750	9250	10900	6850			8800	5600	8750
-60			* 31650	* 31650	* 42900	30250	* 31950	19950	23450	14700			19350	12300	350
-3000			* 22100	* 22100	* 18350	14200	* 13950	9300	* 10800	6850			* 9850	6400	7960
-120			* 50050	* 50050	* 39700	30500	* 30150	20000	* 23100	14850			* 21700	14150	320
-4500			* 20600	* 20600	* 15500	14500	* 11750	9550					* 9900	8150	6750
-180			* 44300	* 44300	* 33300	31250	* 24950	20550					* 21750	18250	270

Illustration 115 g06281301

336 LC: 7560 kg (16667 lb) counterweight, 6.5 m (21 ft 4 inch) extreme service reach boom, 3.2 m (10 ft 6 inch) extreme service stick, 600 mm (24 inch) heavy-duty TG track shoes heavy lift ON.

(mm) (inch)	1500 60		3000 120		4500 180		6000 240		7500 300		9000 360				
kg / Lb															(mm) (inch)
7500									* 7750	* 7750			* 6650	* 6650	7700
300													* 14700	* 14700	300
6000									* 7850	* 7850			* 6450	6400	8580
240									* 17150	* 17150			* 14250	14200	340
4500					* 12050	* 12050	* 9650	* 9650	* 8400	7800	* 7650	5800	* 6500	5650	9130
180							* 20900	* 20900	* 18300	16750			* 14300	12500	360
3000					* 15200	* 15200	* 11150	10350	* 9200	7450	* 8100	5650	* 6750	5300	9410
120					* 32700	* 32700	* 24100	22300	* 19950	16100	* 17700	12150	* 14850	11650	370
1500					* 17500	14650	* 12450	9800	* 9950	7150	* 8450	5500	* 7250	5150	9440
60					* 37700	31550	* 26950	21100	* 21500	15450	* 18350	11850	* 15950	11300	380
0					* 18200	14200	* 13200	9450	* 10400	6950	8500	5400	* 8050	5250	9220
0					* 39450	30550	* 28600	20350	* 22550	14950	18250	11650	* 17750	11500	370
-1500			* 13200	* 13200	* 17850	14100	* 13300	9300	* 10400	6850			* 8600	5600	8750
-60			* 29850	* 29850	* 38650	30300	* 28750	20000	* 22550	14750			* 18950	12350	350
-3000			* 20850	* 20850	* 16500	14200	* 12550	9300	* 9700	6900			* 8850	6400	7960
-120			* 47250	* 47250	* 35700	30550	* 27100	20050	* 20750	14850			* 19450	14150	320
-4500			* 18450	* 18450	* 13900	* 13900	* 10500	9550					* 8850	8200	6750
-180			* 39750	* 39750	* 29900	* 29900	* 22350	20600					* 19450	18300	270

Illustration 116 g06281295

336 LC: 7560 kg (16667 lb) counterweight, 6.5 m (21 ft 4 inch) extreme service reach boom, 3.2 m (10 ft 6 inch) extreme service stick, 600 mm (24 inch) DG track shoes.

(mm) (inch)	1500 60		3000 120		4500 180		6000 240		7500 300		9000 360				
kg / Lb															(mm) (inch)
7500									* 8600	8100			* 7300	* 7300	7700
300													* 16100	* 16100	300
6000									* 8700	8050			* 7100	6400	8580
240									* 19050	17250			* 15600	14200	340
4500					* 13300	* 13300	* 10700	* 10700	* 9350	7800	* 8400	5800	* 7150	5650	9130
180							* 23100	* 23100	* 20350	16750			* 15700	12500	360
3000					* 16850	15650	* 12350	10350	* 10200	7450	8750	5650	* 7400	5300	9410
120					* 36150	33750	* 26700	22300	* 22150	16100	18850	12150	* 16300	11650	370
1500					* 19350	14650	* 13850	9800	* 11050	7150	8600	5500	* 7950	5150	9440
60					* 41750	31550	* 29900	21100	* 23900	15450	18500	11850	* 17450	11300	380
0					* 20200	14200	* 14700	9450	11050	6950	8500	5400	8200	5250	9220
0					* 43700	30550	* 31750	20350	23800	14950	18250	11650	18050	11500	370
-1500			* 14000	* 14000	* 19800	14100	* 14750	9300	10950	6850			8800	5600	8750
-60			* 31650	* 31650	* 42900	30300	* 31950	20000	23550	14750			19400	12350	350
-3000			* 22100	* 22100	* 18350	14200	* 13950	9300	* 10800	6900			* 9850	6400	7960
-120			* 50050	* 50050	* 39700	30550	* 30150	20050	* 23100	14850			* 21700	14150	320
-4500			* 20600	* 20600	* 15500	14550	* 11750	9550					* 9900	8200	6750
-180			* 44300	* 44300	* 33300	31300	* 24950	20600					* 21750	18300	270

Illustration 117 g06281298

336 LC: 7560 kg (16667 lb) counterweight, 6.5 m (21 ft 4 inch) extreme service reach boom, 3.2 m (10 ft 6 inch) extreme service stick, 600 mm (24 inch) DG track shoes heavy lift ON.

6.5 m (21 ft 4 inch) Reach Boom

3.9 m (12 ft 10 inch) Stick

(mm) (inch)	1500 60		3000 120		4500 180		6000 240		7500 300		9000 360				(mm) (inch)
9000													* 5650	* 5650	7350
360													* 12500	* 12500	290
7500									* 6900	* 6900			* 5250	* 5250	8540
300									* 15250	* 15250			* 11550	* 11550	340
6000									* 7200	* 7200	* 6800	6150	* 5100	* 5100	9340
240									* 15700	* 15700	* 13100	* 13100	* 11150	* 11150	370
4500							* 8800	* 8800	* 7850	* 7850	* 7300	6050	* 5100	* 5100	9840
180							* 19050	* 19050	* 17050	* 17050	* 16000	12950	* 11200	* 11200	390
3000					* 13800	* 13800	* 10400	* 10400	* 8750	7750	* 7750	5850	* 5250	4850	10100
120					* 29650	* 29650	* 22500	* 22500	* 18950	16650	* 16900	12600	* 11500	10750	400
1500					* 16600	15250	* 11950	10150	* 9600	7400	* 8250	5700	* 5550	4750	10130
60					* 35850	32900	* 25850	21850	* 20800	15950	* 17850	12200	* 12200	10450	400
0			* 7700	* 7700	* 18100	14600	* 13050	9700	* 10250	7150	* 8550	5550	* 6050	4800	9930
0			* 17550	* 17550	* 39100	31450	* 28200	20950	* 22250	15400	* 18550	11900	* 13350	10600	390
-1500	* 8100	* 8100	* 12150	* 12150	* 18300	14350	* 13450	9500	* 10550	7000	8550	5450	* 6900	5100	9490
-60	* 18000	* 18000	* 27400	* 27400	* 39650	30900	* 29100	20450	* 22800	15050	18450	11750	* 15250	11200	380
-3000	* 12850	* 12850	* 17700	* 17700	* 17500	14350	* 13100	9450	* 10250	6950			* 8250	5700	8770
-120	* 28750	* 28750	* 40100	* 40100	* 37850	30900	* 28350	20350	* 22050	15000			* 18200	12550	350
-4500	* 18450	* 18450	* 21600	* 21600	* 15550	14600	* 11800	9550	* 8800	7100			* 8400	6900	7690
-180	* 41500	* 41500	* 46600	* 46600	* 33550	31400	* 25300	20600	* 18550	15350			* 18550	15350	300
-6000					* 11800	* 11800	* 8350	* 8350					* 8200	* 8200	6060
-240					* 24850	* 24850							* 17900	* 17900	240

Illustration 118 g06281325

336 LC: 7560 kg (16667 lb) counterweight, 6.5 m (21 ft 4 inch) reach boom, 3.9 m (12 ft 10 inch) stick, 850 mm (33 inch) TG track shoes.

(mm) (inch)	1500 60		3000 120		4500 180		6000 240		7500 300		9000 360				(mm) (inch)
9000													* 6200	* 6200	7350
360													* 13750	* 13750	290
7500									* 7650	* 7650			* 5750	* 5750	8540
300									* 16850	* 16850			* 12700	* 12700	340
6000									* 7950	* 7950	* 7450	6150	* 5600	* 5600	9340
240									* 17400	* 17400	* 14350	13150	* 12300	* 12300	370
4500							* 9750	* 9750	* 8700	8050	* 8150	6050	* 5600	5200	9840
180							* 21050	* 21050	* 18950	17350	* 17800	12950	* 12300	11450	390
3000					* 15250	* 15250	* 11550	10750	* 9700	7750	* 8650	5850	* 5750	4850	10100
120					* 32800	* 32800	* 24950	23100	* 21000	16650	* 18800	12600	* 12650	10750	400
1500					* 18400	15250	* 13250	10150	* 10650	7400	8800	5700	* 6100	4750	10130
60					* 39650	32900	* 28650	21850	* 23100	15950	18950	12200	* 13400	10450	400
0			* 8200	* 8200	* 20050	14600	* 14450	9700	11300	7150	8650	5550	* 6650	4800	9930
0			* 18650	* 18650	* 43350	31450	* 31250	20950	24250	15400	18600	11900	* 14650	10600	390
-1500	* 8600	* 8600	* 12850	* 12850	* 20300	14350	* 14900	9500	11100	7000	8550	5450	* 7550	5100	9490
-60	* 19150	* 19150	* 29050	* 29050	* 43950	30900	* 32300	20450	23900	15050	18450	11750	* 16700	11200	380
-3000	* 13600	* 13600	* 18800	* 18800	* 19400	14350	* 14550	9450	11050	6950			8900	5700	8770
-120	* 30500	* 30500	* 42450	* 42450	* 42000	30900	* 31450	20350	23850	15000			19700	12550	350
-4500	* 19550	* 19550	* 24000	* 24000	* 17300	14600	* 13100	9550	* 9850	7100			* 9400	6900	7690
-180	* 43950	* 43950	* 51750	* 51750	* 37300	31400	* 28150	20600	* 20700	15350			* 20700	15350	300
-6000					* 13200	* 13200	* 9350	* 9350					* 9150	* 9150	6060
-240					* 27750	* 27750							* 20050	* 20050	240

Illustration 119 g06281326

336 LC: 7560 kg (16667 lb) counterweight, 6.5 m (21 ft 4 inch) reach boom, 3.9 m (12 ft 10 inch) stick, 850 mm (33 inch) TG track shoes heavy lift ON.

(mm) (inch)	1500 60		3000 120		4500 180		6000 240		7500 300		9000 360				(mm) (inch)
9000													* 5650	* 5650	7350
360													* 12500	* 12500	290
7500									* 6900	* 6900			* 5250	* 5250	8540
300									* 15250	* 15250			* 11550	* 11550	340
6000									* 7200	* 7200	* 6800	6000	* 5100	* 5100	9340
240									* 15700	* 15700	* 13100	12850	* 11150	* 11150	370
4500							* 8800	* 8800	* 7850	* 7850	* 7300	5900	* 5100	5100	9840
180							* 19050	* 19050	* 17050	17000	* 16000	12700	* 11200	* 11200	390
3000					* 13800	* 13800	* 10400	* 10400	* 8750	7600	* 7750	5750	* 5250	4750	10100
120					* 29650	* 29650	* 22500	* 22500	* 18950	16300	* 16900	12350	* 11500	10500	400
1500					* 16600	14950	* 11950	9950	* 9600	7250	* 8250	5550	* 5550	4650	10130
60					* 35850	32250	* 25850	21450	* 20800	15600	* 17850	11950	* 12200	10250	400
0			* 7700	* 7700	* 18100	14300	* 13050	9500	* 10250	7000	8450	5400	* 6050	4700	9930
0			* 17550	* 17550	* 39100	30800	* 28200	20500	* 22250	15050	18200	11650	* 13350	10350	390
-1500	* 8100	* 8100	* 12150	* 12150	* 18300	14100	* 13450	9300	* 10550	6850	8350	5350	* 6900	5000	9490
-60	* 18000	* 18000	* 27400	* 27400	* 39650	30250	* 29100	20000	* 22800	14750	18050	11500	* 15250	11000	380
-3000	* 12850	* 12850	* 17700	* 17700	* 17500	14100	* 13100	9250	* 10250	6800			* 8250	5550	8770
-120	* 28750	* 28750	* 40100	* 40100	* 37850	30300	* 28350	19900	* 22050	14650			* 18200	12300	350
-4500	* 18450	* 18450	* 21600	* 21600	* 15550	14300	* 11800	9350	* 8800	6950			* 8400	6750	7690
-180	* 41500	* 41500	* 46600	* 46600	* 33550	30750	* 25300	20200	* 18550	15050			* 18550	15000	300
-6000					* 11800	* 11800	* 8350	* 8350					* 8200	* 8200	6060
-240					* 24850	* 24850							* 17900	* 17900	240

Illustration 120 g06281322

336 LC: 7560 kg (16667 lb) counterweight, 6.5 m (21 ft 4 inch) reach boom, 3.9 m (12 ft 10 inch) stick, 700 mm (28 inch) TG track shoes.

(mm) (inch)	1500 60		3000 120		4500 180		6000 240		7500 300		9000 360				(mm) (inch)
9000													* 6200	* 6200	7350
360													* 13750	* 13750	290
7500									* 7650	* 7650			* 5750	* 5750	8540
300									* 16850	* 16850			* 12700	* 12700	340
6000									* 7950	* 7950	* 7450	6000	* 5600	* 5600	9340
240									* 17400	* 17400	* 14350	12850	* 12300	* 12300	370
4500							* 9750	* 9750	* 8700	7900	* 8150	5900	* 5600	5100	9840
180							* 21050	* 21050	* 18950	17000	* 17800	12700	* 12300	11200	390
3000					* 15250	* 15250	* 11550	10550	* 9700	7600	* 8650	5750	* 5750	4750	10100
120					* 32800	* 32800	* 24950	22700	* 21000	16300	* 18800	12350	* 12650	10500	400
1500					* 18400	14950	* 13250	9950	* 10650	7250	8600	5550	* 6100	4650	10130
60					* 39650	32250	* 28650	21450	* 23100	15600	18550	11950	* 13400	10250	400
0			* 8200	* 8200	* 20050	14300	* 14450	9500	11050	7000	8450	5400	* 6650	4700	9930
0			* 18650	* 18650	* 43350	30800	* 31250	20500	23750	15050	18200	11650	* 14650	10350	390
-1500	* 8600	* 8600	* 12850	* 12850	* 20300	14100	* 14900	9300	10850	6850	8350	5350	* 7550	5000	9490
-60	* 19150	* 19150	* 29050	* 29050	* 43950	30250	* 32300	20000	23400	14750	18050	11500	* 16700	11000	380
-3000	* 13600	* 13600	* 18800	* 18800	* 19400	14100	* 14550	9250	10850	6800			8700	5550	8770
-120	* 30500	* 30500	* 42450	* 42450	* 42000	30300	* 31450	19900	23350	14650			19300	12300	350
-4500	* 19550	* 19550	* 24000	* 24000	* 17300	14300	* 13100	9350	* 9850	6950			* 9400	6750	7690
-180	* 43950	* 43950	* 51750	* 51750	* 37300	30750	* 28150	20200	* 20700	15050			* 20700	15000	300
-6000					* 13200	* 13200	* 9350	* 9350					* 9150	* 9150	6060
-240					* 27750	* 27750							* 20050	* 20050	240

Illustration 121 g06281324

336 LC: 7560 kg (16667 lb) counterweight, 6.5 m (21 ft 4 inch) reach boom, 3.9 m (12 ft 10 inch) stick, 700 mm (28 inch) TG track shoes heavy lift ON.

(mm) (inch)	1500 60		3000 120		4500 180		6000 240		7500 300		9000 360				(mm) (inch)
9000													* 5650	* 5650	7350
360													* 12500	* 12500	290
7500									* 6900	* 6900			* 5250	* 5250	8540
300									* 15250	* 15250			* 11550	* 11550	340
6000									* 7200	* 7200	* 6800	5950	* 5100	* 5100	9340
240									* 15700	* 15700	* 13100	12750	* 11150	* 11150	370
4500							* 8800	* 8800	* 7850	* 7850	* 7300	5850	* 5100	5050	9840
180							* 19050	* 19050	* 17050	16900	* 16000	12600	* 11200	11100	390
3000					* 13800	* 13800	* 10400	* 10400	* 8750	7500	* 7750	5700	* 5250	4750	10100
120					* 29650	* 29650	* 22500	* 22500	* 18950	16200	* 16900	12250	* 11500	10400	400
1500					* 16600	14850	* 11950	9850	* 9600	7200	* 8250	5500	* 5550	4600	10130
60					* 35850	32000	* 25850	21250	* 20800	15500	* 17850	11850	* 12200	10150	400
0			* 7700	* 7700	* 18100	14200	* 13050	9450	* 10250	6950	8400	5350	* 6050	4650	9930
0			* 17550	* 17550	* 39100	30550	* 28200	20350	* 22250	14950	18050	11550	* 13350	10250	390
-1500	* 8100	* 8100	* 12150	* 12150	* 18300	13950	* 13450	9200	* 10550	6800	8300	5300	* 6900	4950	9490
-60	* 18000	* 18000	* 27400	* 27400	* 39650	30000	* 29100	19850	* 22800	14600	17850	11400	* 15250	10900	380
-3000	* 12850	* 12850	* 17700	* 17700	* 17500	13950	* 13100	9150	* 10250	6750			* 8250	5500	8770
-120	* 28750	* 28750	* 40100	* 40100	* 37850	30050	* 28350	19750	* 22050	14550			* 18200	12200	350
-4500	* 18450	* 18450	* 21600	* 21600	* 15550	14200	* 11800	9300	* 8800	6900			* 8400	6700	7690
-180	* 41500	* 41500	* 46600	* 46600	* 33550	30500	* 25300	20000	* 18550	14900			* 18550	14900	300
-6000					* 11800	* 11800	* 8350	* 8350					* 8200	* 8200	6060
-240					* 24850	* 24850							* 17900	* 17900	240

Illustration 122 g06281316

336 LC: 7560 kg (16667 lb) counterweight, 6.5 m (21 ft 4 inch) reach boom, 3.9 m (12 ft 10 inch) stick, 600 mm (24 inch) TG track shoes.

(mm) (inch)	1500 60		3000 120		4500 180		6000 240		7500 300		9000 360				(mm) (inch)
9000													* 6200	* 6200	7350
360													* 13750	* 13750	290
7500									* 7650	* 7650			* 5750	* 5750	8540
300									* 16850	* 16850			* 12700	* 12700	340
6000									* 7950	* 7950	* 7450	5950	* 5600	* 5600	9340
240									* 17400	* 17400	* 14350	12750	* 12300	* 12300	370
4500							* 9750	* 9750	* 8700	7850	* 8150	5850	* 5600	5050	9840
180							* 21050	* 21050	* 18950	16900	* 17800	12600	* 12300	11100	390
3000					* 15250	* 15250	* 11550	10450	* 9700	7500	* 8650	5700	* 5750	4750	10100
120					* 32800	* 32800	* 24950	22550	* 21000	16200	18750	12250	* 12650	10400	400
1500					* 18400	14850	* 13250	9850	* 10650	7200	8550	5500	* 6100	4600	10130
60					* 39650	32000	* 28650	21250	* 23100	15500	18350	11850	* 13400	10150	400
0			* 8200	* 8200	* 20050	14200	* 14450	9450	10950	6950	8400	5350	* 6650	4650	9930
0			* 18650	* 18650	* 43350	30550	* 31250	20350	23550	14950	18050	11550	* 14650	10250	390
-1500	* 8600	* 8600	* 12850	* 12850	* 20300	13950	* 14900	9200	10800	6800	8300	5300	* 7550	4950	9490
-60	* 19150	* 19150	* 29050	* 29050	* 43950	30000	* 32300	19850	23200	14600	17850	11400	* 16700	10900	380
-3000	* 13600	* 13600	* 18800	* 18800	* 19400	13950	* 14550	9150	10750	6750			8650	5500	8770
-120	* 30500	* 30500	* 42450	* 42450	* 42000	30050	* 31450	19750	23100	14550			19100	12200	350
-4500	* 19550	* 19550	* 24000	* 24000	* 17300	14200	* 13100	9300	* 9850	6900			* 9400	6700	7690
-180	* 43950	* 43950	* 51750	* 51750	* 37300	30500	* 28150	20000	* 20700	14900			* 20700	14900	300
-6000					* 13200	* 13200	* 9350	* 9350					* 9150	* 9150	6060
-240					* 27750	* 27750							* 20050	* 20050	240

Illustration 123 g06281318

336 LC: 7560 kg (16667 lb) counterweight, 6.5 m (21 ft 4 inch) reach boom, 3.9 m (12 ft 10 inch) stick, 600 mm (24 inch) TG track shoes heavy lift ON.

(mm) (inch)	1500 60		3000 120		4500 180		6000 240		7500 300		9000 360				
kg / Lb															(mm) (inch)
9000													* 5650	* 5650	7350
360													* 12500	* 12500	290
7500									* 6900	* 6900			* 5250	* 5250	8540
300									* 15250	* 15250			* 11550	* 11550	340
6000									* 7200	* 7200	* 6800	6050	* 5100	* 5100	9340
240									* 15700	* 15700	* 13100	12950	* 11150	* 11150	370
4500							* 8800	* 8800	* 7850	* 7850	* 7300	5950	* 5100	* 5100	9840
180							* 19050	* 19050	* 17050	* 17050	* 16000	12800	* 11200	* 11200	390
3000					* 13800	* 13800	* 10400	* 10400	* 8750	7650	* 7750	5800	* 5250	4800	10100
120					* 29650	* 29650	* 22500	* 22500	* 18950	16450	* 16900	12450	* 11500	10600	400
1500					* 16600	15050	* 11950	10000	* 9600	7300	* 8250	5600	* 5550	4700	10130
60					* 35850	32500	* 25850	21600	* 20800	15750	* 17850	12050	* 12200	10300	400
0			* 7700	* 7700	* 18100	14400	* 13050	9600	* 10250	7050	8500	5450	* 6050	4750	9930
0			* 17550	* 17550	* 39100	31050	* 28200	20650	* 22250	15200	18350	11750	* 13350	10450	390
-1500	* 8100	* 8100	* 12150	* 12150	* 18300	14200	* 13450	9350	* 10550	6900	8450	5400	* 6900	5000	9490
-60	* 18000	* 18000	* 27400	* 27400	* 39650	30500	* 29100	20150	* 22800	14850	18150	11600	* 15250	11050	380
-3000	* 12850	* 12850	* 17700	* 17700	* 17500	14200	* 13100	9300	* 10250	6850			* 8250	5600	8770
-120	* 28750	* 28750	* 40100	* 40100	* 37850	30500	* 28350	20050	* 22050	14800			* 18200	12400	350
-4500	* 18450	* 18450	* 21600	* 21600	* 15550	14400	* 11800	9450	* 8800	7000			* 8400	6800	7690
-180	* 41500	* 41500	* 46600	* 46600	* 33550	31000	* 25300	20350	* 18550	15150			* 18550	15150	300
-6000					* 11800	* 11800	* 8350	* 8350					* 8200	* 8200	6060
-240					* 24850	* 24850							* 17900	* 17900	240

Illustration 124 g06281332

336 LC: 7560 kg (16667 lb) counterweight, 6.5 m (21 ft 4 inch) reach boom, 3.9 m (12 ft 10 inch) stick, 600 mm (24 inch) heavy-duty TG track shoes.

(mm) (inch)	1500 60		3000 120		4500 180		6000 240		7500 300		9000 360				
kg / Lb															(mm) (inch)
9000													* 6200	* 6200	7350
360													* 13750	* 13750	290
7500									* 7650	* 7650			* 5750	* 5750	8540
300									* 16850	* 16850			* 12700	* 12700	340
6000									* 7950	* 7950	* 7450	6050	* 5600	* 5600	9340
240									* 17400	* 17400	* 14350	12950	* 12300	* 12300	370
4500							* 9750	* 9750	* 8700	7950	* 8150	5950	* 5600	5100	9840
180							* 21050	* 21050	* 18950	17100	* 17800	12800	* 12300	11300	390
3000					* 15250	* 15250	* 11550	10600	* 9700	7650	* 8650	5800	* 5750	4800	10100
120					* 32800	* 32800	* 24950	22850	* 21000	16450	* 18800	12450	* 12650	10600	400
1500					* 18400	15050	* 13250	10000	* 10650	7300	8700	5600	* 6100	4700	10130
60					* 39650	32500	* 28650	21600	* 23100	15750	18650	12050	* 13400	10300	400
0			* 8200	* 8200	* 20050	14400	* 14450	9600	11150	7050	8500	5450	* 6650	4750	9930
0			* 18650	* 18650	* 43350	31050	* 31250	20650	23950	15200	18350	11750	* 14650	10450	390
-1500	* 8600	* 8600	* 12850	* 12850	* 20300	14200	* 14900	9350	10950	6900	8450	5400	* 7550	5000	9490
-60	* 19150	* 19150	* 29050	* 29050	* 43950	30500	* 32300	20150	23550	14850	18150	11600	* 16700	11050	380
-3000	* 13600	* 13600	* 18800	* 18800	* 19400	14200	* 14550	9300	10900	6850			8800	5600	8770
-120	* 30500	* 30500	* 42450	* 42450	* 42000	30500	* 31450	20050	23500	14800			19450	12400	350
-4500	* 19550	* 19550	* 24000	* 24000	* 17300	14400	* 13100	9450	* 9850	7000			* 9400	6800	7690
-180	* 43950	* 43950	* 51750	* 51750	* 37300	31000	* 28150	20350	* 20700	15150			* 20700	15150	300
-6000					* 13200	* 13200	* 9350	* 9350					* 9150	* 9150	6060
-240					* 27750	* 27750							* 20050	* 20050	240

Illustration 125 g06281334

336 LC: 7560 kg (16667 lb) counterweight, 6.5 m (21 ft 4 inch) reach boom, 3.9 m (12 ft 10 inch) stick, 600 mm (24 inch) heavy-duty TG track shoes heavy lift ON.

(mm) (inch)	1500 60		3000 120		4500 180		6000 240		7500 300		9000 360				(mm) (inch)
9000													* 5650	* 5650	7350
360													* 12500	* 12500	290
7500									* 6900	* 6900			* 5250	* 5250	8540
300									* 15250	* 15250			* 11550	* 11550	340
6000									* 7200	* 7200	* 6800	6100	* 5100	* 5100	9340
240									* 15700	* 15700	* 13100	13000	* 11150	* 11150	370
4500							* 8800	* 8800	* 7850	* 7850	* 7300	5950	* 5100	* 5100	9840
180							* 19050	* 19050	* 17050	* 17050	* 16000	12800	* 11200	* 11200	390
3000					* 13800	* 13800	* 10400	* 10400	* 8750	7650	* 7750	5800	* 5250	4800	10100
120					* 29650	* 29650	* 22500	* 22500	* 18950	16450	* 16900	12450	* 11500	10600	400
1500					* 16600	15100	* 11950	10050	* 9600	7350	* 8250	5600	* 5550	4700	10130
60					* 35850	32550	* 25850	21650	* 20800	15750	* 17850	12100	* 12200	10350	400
0			* 7700	* 7700	* 18100	14450	* 13050	9600	* 10250	7050	8550	5500	* 6050	4750	9930
0			* 17550	* 17550	* 39100	31100	* 28200	20700	* 22250	15200	18400	11800	* 13350	10500	390
-1500	* 8100	* 8100	* 12150	* 12150	* 18300	14200	* 13450	9400	* 10550	6900	8450	5400	* 6900	5050	9490
-60	* 18000	* 18000	* 27400	* 27400	* 39650	30550	* 29100	20200	* 22800	14900	18200	11600	* 15250	11100	380
-3000	* 12850	* 12850	* 17700	* 17700	* 17500	14200	* 13100	9350	* 10250	6900			* 8250	5600	8770
-120	* 28750	* 28750	* 40100	* 40100	* 37850	30600	* 28350	20100	* 22050	14800			* 18200	12400	350
-4500	* 18450	* 18450	* 21600	* 21600	* 15550	14450	* 11800	9450	* 8800	7000			* 8400	6800	7690
-180	* 41500	* 41500	* 46600	* 46600	* 33550	31050	* 25300	20400	* 18550	15200			* 18550	15150	300
-6000					* 11800	* 11800	* 8350	* 8350					* 8200	* 8200	6060
-240					* 24850	* 24850							* 17900	* 17900	240

Illustration 126 g06281328

336 LC: 7560 kg (16667 lb) counterweight, 6.5 m (21 ft 4 inch) reach boom, 3.9 m (12 ft 10 inch) stick, 600 mm (24 inch) DG track shoes.

(mm) (inch)	1500 60		3000 120		4500 180		6000 240		7500 300		9000 360				(mm) (inch)
9000													* 6200	* 6200	7350
360													* 13750	* 13750	290
7500									* 7650	* 7650			* 5750	* 5750	8540
300									* 16850	* 16850			* 12700	* 12700	340
6000									* 7950	* 7950	* 7450	6100	* 5600	* 5600	9340
240									* 17400	* 17400	* 14350	13000	* 12300	* 12300	370
4500							* 9750	* 9750	* 8700	8000	* 8150	5950	* 5600	5150	9840
180							* 21050	* 21050	* 18950	17150	* 17800	12800	* 12300	11300	390
3000					* 15250	* 15250	* 11550	10650	* 9700	7650	* 8650	5800	* 5750	4800	10100
120					* 32800	* 32800	* 24950	22900	* 21000	16450	* 18800	12450	* 12650	10600	400
1500					* 18400	15100	* 13250	10050	* 10650	7350	8700	5600	* 6100	4700	10130
60					* 39650	32550	* 28650	21650	* 23100	15750	18700	12100	* 13400	10350	400
0			* 8200	* 8200	* 20050	14450	* 14450	9600	11150	7050	8550	5500	* 6650	4750	9930
0			* 18650	* 18650	* 43350	31100	* 31250	20700	24000	15200	18400	11800	* 14650	10500	390
-1500	* 8600	* 8600	* 12850	* 12850	* 20300	14200	* 14900	9400	11000	6900	8450	5400	* 7550	5050	9490
-60	* 19150	* 19150	* 29050	* 29050	* 43950	30550	* 32300	20200	23650	14900	18200	11600	* 16700	11100	380
-3000	* 13600	* 13600	* 18800	* 18800	* 19400	14200	* 14550	9350	10950	6900			8800	5600	8770
-120	* 30500	* 30500	* 42450	* 42450	* 42000	30600	* 31450	20100	23550	14800			19500	12400	350
-4500	* 19550	* 19550	* 24000	* 24000	* 17300	14450	* 13100	9450	* 9850	7000			* 9400	6800	7690
-180	* 43950	* 43950	* 51750	* 51750	* 37300	31050	* 28150	20400	* 20700	15200			* 20700	15150	300
-6000					* 13200	* 13200	* 9350	* 9350					* 9150	* 9150	6060
-240					* 27750	* 27750							* 20050	* 20050	240

Illustration 127 g06281331

336 LC: 7560 kg (16667 lb) counterweight, 6.5 m (21 ft 4 inch) reach boom, 3.9 m (12 ft 10 inch) stick, 600 mm (24 inch) DG track shoes heavy lift ON.

6.5 m (21 ft 4 inch) Extreme Service Reach Boom

3.9 m (12 ft 10 inch) Extreme Service Stick

(mm) (inch)	1500 60		3000 120		4500 180		6000 240		7500 300		9000 360				(mm) (inch)
9000													* 5550	* 5550	7350
360													* 12350	* 12350	290
7500									* 6750	* 6750			* 5150	* 5150	8540
300									* 14950	* 14950			* 11400	* 11400	340
6000									* 7050	* 7050	* 6700	6050	* 5000	* 5000	9340
240									* 15400	* 15400	* 12900	12900	* 11000	* 11000	370
4500							* 8650	* 8650	* 7700	* 7700	* 7150	5900	* 5000	* 5000	9840
180							* 18700	* 18700	* 16750	* 16750	* 15650	12700	* 11000	* 11000	390
3000					* 13600	* 13600	* 10250	* 10250	* 8550	7600	* 7600	5750	* 5150	4750	10100
120					* 29200	* 29200	* 22100	* 22100	* 18550	16350	* 16500	12300	* 11350	10450	400
1500					* 16350	15050	* 11750	10000	* 9400	7250	* 8050	5550	* 5500	4650	10130
60					* 35250	32450	* 25350	21500	* 20400	15650	* 17450	11950	* 12050	10150	400
0			* 7650	* 7650	* 17750	14350	* 12800	9550	* 10050	7000	* 8350	5400	* 6000	4700	9930
0			* 17400	* 17400	* 38450	30900	* 27650	20550	* 21800	15050	* 18150	11600	* 13200	10300	390
-1500	* 8000	* 8000	* 12050	* 12050	* 17950	14100	* 13200	9300	* 10300	6800	* 8400	5300	* 6850	4950	9490
-60	* 17850	* 17850	* 27250	* 27250	* 38950	30300	* 28550	20000	* 22350	14700	* 18100	11450	* 15050	10900	380
-3000	* 12750	* 12750	* 17650	* 17650	* 17150	14100	* 12850	9250	* 10000	6800			* 8050	5550	8770
-120	* 28600	* 28600	* 39900	* 39900	* 37150	30300	* 27750	19900	* 21550	14600			* 17750	12250	350
-4500	* 18400	* 18400	* 21200	* 21200	* 15250	14350	* 11500	9350	* 8600	6950			* 8200	6750	7690
-180	* 41350	* 41350	* 45650	* 45650	* 32850	30850	* 24700	20200	* 18100	15000			* 18050	15000	300
-6000					* 11500	* 11500	* 8100	* 8100					* 7950	* 7950	6060
-240					* 24250	* 24250							* 17400	* 17400	240

Illustration 128 g06281345

336 LC: 7560 kg (16667 lb) counterweight, 6.5 m (21 ft 4 inch) extreme service reach boom, 3.9 m (12 ft 10 inch) extreme service stick, 850 mm (33 inch) TG track shoes.

(mm) (inch)	1500 60		3000 120		4500 180		6000 240		7500 300		9000 360				(mm) (inch)
9000													* 6100	* 6100	7350
360													* 13600	* 13600	290
7500									* 7500	* 7500			* 5650	* 5650	8540
300									* 16550	* 16550			* 12500	* 12500	340
6000									* 7800	* 7800	* 7350	6050	* 5500	* 5500	9340
240									* 17100	* 17100	* 14200	12900	* 12100	* 12100	370
4500							* 9600	* 9600	* 8550	7950	* 7950	5900	* 5500	5050	9840
180							* 20750	* 20750	* 18600	17100	* 17400	12700	* 12150	11200	390
3000					* 15050	* 15050	* 11350	10600	* 9500	7600	* 8450	5750	* 5700	4750	10100
120					* 32300	* 32300	* 24550	22850	* 20650	16350	* 18400	12300	* 12500	10450	400
1500					* 18100	15050	* 13050	10000	* 10450	7250	8700	5550	* 6050	4650	10130
60					* 39050	32450	* 28200	21500	* 22700	15650	18650	11950	* 13250	10150	400
0			* 8150	* 8150	* 19700	14350	* 14200	9550	11150	7000	8500	5400	* 6600	4700	9930
0			* 18500	* 18500	* 42650	30900	* 30750	20550	23950	15050	18300	11600	* 14500	10300	390
-1500	* 8500	* 8500	* 12800	* 12800	* 19950	14100	* 14650	9300	10950	6800	8450	5300	* 7500	4950	9490
-60	* 19000	* 19000	* 28900	* 28900	* 43200	30300	* 31750	20000	23550	14700	18150	11450	* 16550	10900	380
-3000	* 13550	* 13550	* 18700	* 18700	* 19100	14100	* 14300	9250	10900	6800			8800	5550	8770
-120	* 30300	* 30300	* 42300	* 42300	* 41300	30300	* 30900	19900	23500	14600			19400	12250	350
-4500	* 19500	* 19500	* 23550	* 23550	* 17000	14350	* 12850	9350	* 9600	6950			* 9200	6750	7690
-180	* 43800	* 43800	* 50850	* 50850	* 36600	30850	* 27600	20200	* 20250	15000			* 20200	15000	300
-6000					* 12900	* 12900	* 9100	* 9100					* 8950	* 8950	6060
-240					* 27150	* 27150							* 19550	* 19550	240

Illustration 129 g06281347

336 LC: 7560 kg (16667 lb) counterweight, 6.5 m (21 ft 4 inch) extreme service reach boom, 3.9 m (12 ft 10 inch) extreme service stick, 850 mm (33 inch) TG track shoes heavy lift ON.

(mm) (inch)	1500 60		3000 120		4500 180		6000 240		7500 300		9000 360				
															(mm) (inch)
9000													* 5550	* 5550	7350
360													* 12350	* 12350	290
7500									* 6750	* 6750			* 5150	* 5150	8540
300									* 14950	* 14950			* 11400	* 11400	340
6000									* 7050	* 7050	* 6700	5900	* 5000	* 5000	9340
240									* 15400	* 15400	* 12900	12650	* 11000	* 11000	370
4500							* 8650	* 8650	* 7700	* 7700	* 7150	5800	* 5000	4950	9840
180							* 18700	* 18700	* 16750	* 16750	* 15650	12450	* 11000	10950	390
3000					* 13600	* 13600	* 10250	* 10250	* 8550	7450	* 7600	5600	* 5150	4650	10100
120					* 29200	* 29200	* 22100	* 22100	* 18550	16050	* 16500	12050	* 11350	10200	400
1500					* 16350	14750	* 11750	9800	* 9400	7100	* 8050	5450	* 5500	4500	10130
60					* 35250	31800	* 25350	21100	* 20400	15300	* 17450	11650	* 12050	9950	400
0			* 7650	* 7650	* 17750	14050	* 12800	9350	* 10050	6850	8350	5300	* 6000	4600	9930
0			* 17400	* 17400	* 38450	30250	* 27650	20100	* 21800	14700	17900	11350	* 13200	10050	390
-1500	* 8000	* 8000	* 12050	* 12050	* 17950	13800	* 13200	9100	* 10300	6700	8250	5200	* 6850	4850	9490
-60	* 17850	* 17850	* 27250	* 27250	* 38950	29700	* 28550	19600	* 22350	14350	17750	11200	* 15050	10650	380
-3000	* 12750	* 12750	* 17650	* 17650	* 17150	13800	* 12850	9050	* 10000	6650			* 8050	5400	8770
-120	* 28600	* 28600	* 39900	* 39900	* 37150	29700	* 27750	19450	* 21550	14300			* 17750	11950	350
-4500	* 18400	* 18400	* 21200	* 21200	* 15250	14050	* 11500	9150	* 8600	6800			* 8200	6600	7690
-180	* 41350	* 41350	* 45650	* 45650	* 32850	30200	* 24700	19800	* 18100	14700			* 18050	14700	300
-6000					* 11500	* 11500	* 8100	* 8100					* 7950	* 7950	6060
-240					* 24250	* 24250							* 17400	* 17400	240

Illustration 130 g06281341

336 LC: 7560 kg (16667 lb) counterweight, 6.5 m (21 ft 4 inch) extreme service reach boom, 3.9 m (12 ft 10 inch) extreme service stick, 700 mm (28 inch) TG track shoes.

(mm) (inch)	1500 60		3000 120		4500 180		6000 240		7500 300		9000 360				
															(mm) (inch)
9000													* 6100	* 6100	7350
360													* 13600	* 13600	290
7500									* 7500	* 7500			* 5650	* 5650	8540
300									* 16550	* 16550			* 12500	* 12500	340
6000									* 7800	* 7800	* 7350	5900	* 5500	* 5500	9340
240									* 17100	* 17100	* 14200	12650	* 12100	* 12100	370
4500							* 9600	* 9600	* 8550	7800	* 7950	5800	* 5500	4950	9840
180							* 20750	* 20750	* 18600	16800	* 17400	12450	* 12150	10950	390
3000					* 15050	* 15050	* 11350	10400	* 9500	7450	* 8450	5600	* 5700	4650	10100
120					* 32300	* 32300	* 24550	22450	* 20650	16050	* 18400	12050	* 12500	10200	400
1500					* 18100	14750	* 13050	9800	* 10450	7100	8500	5450	* 6050	4500	10130
60					* 39050	31800	* 28200	21100	* 22700	15300	18250	11650	* 13250	9950	400
0			* 8150	* 8150	* 19700	14050	* 14200	9350	10900	6850	8350	5300	* 6600	4600	9930
0			* 18500	* 18500	* 42650	30250	* 30750	20100	23450	14700	17900	11350	* 14500	10050	390
-1500	* 8500	* 8500	* 12800	* 12800	* 19950	13800	* 14650	9100	10700	6700	8250	5200	* 7500	4850	9490
-60	* 19000	* 19000	* 28900	* 28900	* 43200	29700	* 31750	19600	23050	14350	17750	11200	* 16550	10650	380
-3000	* 13550	* 13550	* 18700	* 18700	* 19100	13800	* 14300	9050	10700	6650			8600	5400	8770
-120	* 30300	* 30300	* 42300	* 42300	* 41300	29700	* 30900	19450	23000	14300			19000	11950	350
-4500	* 19500	* 19500	* 23550	* 23550	* 17000	14050	* 12850	9150	* 9600	6800			* 9200	6600	7690
-180	* 43800	* 43800	* 50850	* 50850	* 36600	30200	* 27600	19800	* 20250	14700			* 20200	14700	300
-6000					* 12900	* 12900	* 9100	* 9100					* 8950	* 8950	6060
-240					* 27150	* 27150							* 19550	* 19550	240

Illustration 131 g06281343

336 LC: 7560 kg (16667 lb) counterweight, 6.5 m (21 ft 4 inch) extreme service reach boom, 3.9 m (12 ft 10 inch) extreme service stick, 700 mm (28 inch) TG track shoes heavy lift ON.

(mm) (inch)	1500 60		3000 120		4500 180		6000 240		7500 300		9000 360				(mm) (inch)
9000													* 5550	* 5550	7350
360													* 12350	* 12350	290
7500									* 6750	* 6750			* 5150	* 5150	8540
300									* 14950	* 14950			* 11400	* 11400	340
6000									* 7050	* 7050	* 6700	5850	* 5000	* 5000	9340
240									* 15400	* 15400	* 12900	12550	* 11000	* 11000	370
4500							* 8650	* 8650	* 7700	* 7700	* 7150	5750	* 5000	4900	9840
180							* 18700	* 18700	* 16750	16650	* 15650	12350	* 11000	10850	390
3000					* 13600	* 13600	* 10250	* 10250	* 8550	7400	* 7600	5550	* 5150	4600	10100
120					* 29200	* 29200	* 22100	* 22100	* 18550	15950	* 16500	11950	* 11350	10150	400
1500					* 16350	14650	* 11750	9700	* 9400	7050	* 8050	5400	* 5500	4500	10130
60					* 35250	31550	* 25350	20900	* 20400	15200	* 17450	11550	* 12050	9850	400
0			* 7650	* 7650	* 17750	13950	* 12800	9250	* 10050	6800	8250	5250	* 6000	4550	9930
0			* 17400	* 17400	* 38450	30000	* 27650	19950	* 21800	14600	17750	11250	* 13200	9950	390
-1500	* 8000	* 8000	* 12050	* 12050	* 17950	13700	* 13200	9000	* 10300	6600	8150	5150	* 6850	4800	9490
-60	* 17850	* 17850	* 27250	* 27250	* 38950	29450	* 28550	19400	* 22350	14250	17550	11050	* 15050	10550	380
-3000	* 12750	* 12750	* 17650	* 17650	* 17150	13700	* 12850	8950	* 10000	6600			* 8050	5350	8770
-120	* 28600	* 28600	* 39900	* 39900	* 37150	29450	* 27750	19300	* 21550	14200			* 17750	11850	350
-4500	* 18400	* 18400	* 21200	* 21200	* 15250	13900	* 11500	9100	* 8600	6750			* 8200	6550	7690
-180	* 41350	* 41350	* 45650	* 45650	* 32850	29950	* 24700	19600	* 18100	14550			* 18050	14550	300
-6000					* 11500	* 11500	* 8100	* 8100					* 7950	* 7950	6060
-240					* 24250	* 24250							* 17400	* 17400	240

Illustration 132 g06281338

336 LC: 7560 kg (16667 lb) counterweight, 6.5 m (21 ft 4 inch) extreme service reach boom, 3.9 m (12 ft 10 inch) extreme service stick, 600 mm (24 inch) TG track shoes.

(mm) (inch)	1500 60		3000 120		4500 180		6000 240		7500 300		9000 360				(mm) (inch)
9000													* 6100	* 6100	7350
360													* 13600	* 13600	290
7500									* 7500	* 7500			* 5650	* 5650	8540
300									* 16550	* 16550			* 12500	* 12500	340
6000									* 7800	* 7800	* 7350	5850	* 5500	5500	9340
240									* 17100	* 17100	* 14200	12550	* 12100	* 12100	370
4500							* 9600	* 9600	* 8550	7750	* 7950	5750	* 5500	4900	9840
180							* 20750	* 20750	* 18600	16650	* 17400	12350	* 12150	10850	390
3000					* 15050	* 15050	* 11350	10350	* 9500	7400	* 8450	5550	* 5700	4600	10100
120					* 32300	* 32300	* 24550	22250	* 20650	15950	* 18400	11950	* 12500	10150	400
1500					* 18100	14650	* 13050	9700	* 10450	7050	8400	5400	* 6050	4500	10130
60					* 39050	31550	* 28200	20900	* 22700	15200	18100	11550	* 13250	9850	400
0			* 8150	* 8150	* 19700	13950	* 14200	9250	10800	6800	8250	5250	* 6600	4550	9930
0			* 18500	* 18500	* 42650	30000	* 30750	19950	23250	14600	17750	11250	* 14500	9950	390
-1500	* 8500	* 8500	* 12800	* 12800	* 19950	13700	* 14650	9000	10650	6600	8150	5150	* 7500	4800	9490
-60	* 19000	* 19000	* 28900	* 28900	* 43200	29450	* 31750	19400	22850	14250	17550	11050	* 16550	10550	380
-3000	* 13550	* 13550	* 18700	* 18700	* 19100	13700	* 14300	8950	10600	6600			8500	5350	8770
-120	* 30300	* 30300	* 42300	* 42300	* 41300	29450	* 30900	19300	22800	14200			18800	11850	350
-4500	* 19500	* 19500	* 23550	* 23550	* 17000	13900	* 12850	9100	* 9600	6750			* 9200	6550	7690
-180	* 43800	* 43800	* 50850	* 50850	* 36600	29950	* 27600	19600	* 20250	14550			* 20200	14550	300
-6000					* 12900	* 12900	* 9100	* 9100					* 8950	* 8950	6060
-240					* 27150	* 27150							* 19550	* 19550	240

Illustration 133 g06281340

336 LC: 7560 kg (16667 lb) counterweight, 6.5 m (21 ft 4 inch) extreme service reach boom, 3.9 m (12 ft 10 inch) extreme service stick, 600 mm (24 inch) TG track shoes heavy lift ON.

(mm) (inch)	1500 60		3000 120		4500 180		6000 240		7500 300		9000 360				(mm) (inch)
9000													* 5550	* 5550	7350
360													* 12350	* 12350	290
7500									* 6750	* 6750			* 5150	* 5150	8540
300									* 14950	* 14950			* 11400	* 11400	340
6000									* 7050	* 7050	* 6700	5950	* 5000	* 5000	9340
240									* 15400	* 15400	* 12900	12750	* 11000	* 11000	370
4500							* 8650	* 8650	* 7700	* 7700	* 7150	5850	* 5000	5000	9840
180							* 18700	* 18700	* 16750	* 16750	* 15650	12550	* 11000	* 11000	390
3000					* 13600	* 13600	* 10250	* 10250	* 8550	7500	* 7600	5650	* 5150	4700	10100
120					* 29200	* 29200	* 22100	* 22100	* 18550	16150	* 16500	12150	* 11350	10300	400
1500					* 16350	14850	* 11750	9850	* 9400	7150	* 8050	5500	* 5500	4550	10130
60					* 35250	32050	* 25350	21250	* 20400	15450	* 17450	11750	* 12050	10000	400
0			* 7650	* 7650	* 17750	14150	* 12800	9400	* 10050	6900	* 8350	5300	* 6000	4600	9930
0			* 17400	* 17400	* 38450	30500	* 27650	20250	* 21800	14850	18050	11450	* 13200	10150	390
-1500	* 8000	* 8000	* 12050	* 12050	* 17950	13900	* 13200	9150	* 10300	6750	8300	5250	* 6850	4900	9490
-60	* 17850	* 17850	* 27250	* 27250	* 38950	29900	* 28550	19750	* 22350	14500	17900	11250	* 15050	10750	380
-3000	* 12750	* 12750	* 17650	* 17650	* 17150	13900	* 12850	9100	* 10000	6700			* 8050	5450	8770
-120	* 28600	* 28600	* 39900	* 39900	* 37150	29900	* 27750	19600	* 21550	14400			* 17750	12050	350
-4500	* 18400	* 18400	* 21200	* 21200	* 15250	14150	* 11500	9250	* 8600	6850			* 8200	6650	7690
-180	* 41350	* 41350	* 45650	* 45650	* 32850	30450	* 24700	19900	* 18100	14800			* 18050	14800	300
-6000					* 11500	* 11500	* 8100	* 8100					* 7950	* 7950	6060
-240					* 24250	* 24250							* 17400	* 17400	240

Illustration 134 g06281352

336 LC: 7560 kg (16667 lb) counterweight, 6.5 m (21 ft 4 inch) extreme service reach boom, 3.9 m (12 ft 10 inch) extreme service stick, 600 mm (24 inch) heavy-duty TG track shoes.

(mm) (inch)	1500 60		3000 120		4500 180		6000 240		7500 300		9000 360				(mm) (inch)
9000													* 6100	* 6100	7350
360													* 13600	* 13600	290
7500									* 7500	* 7500			* 5650	* 5650	8540
300									* 16550	* 16550			* 12500	* 12500	340
6000									* 7800	* 7800	* 7350	5950	* 5500	* 5500	9340
240									* 17100	* 17100	* 14200	12750	* 12100	* 12100	370
4500							* 9600	* 9600	* 8550	7850	* 7950	5850	* 5500	5000	9840
180							* 20750	* 20750	* 18600	16900	* 17400	12550	* 12150	11050	390
3000					* 15050	* 15050	* 11350	10500	* 9500	7500	* 8450	5650	* 5700	4700	10100
120					* 32300	* 32300	* 24550	22600	* 20650	16150	* 18400	12150	* 12500	10300	400
1500					* 18100	14850	* 13050	9850	* 10450	7150	8550	5500	* 6050	4550	10130
60					* 39050	32050	* 28200	21250	* 22700	15450	18400	11750	* 13250	10000	400
0			* 8150	* 8150	* 19700	14150	* 14200	9400	11000	6900	8400	5300	* 6600	4600	9930
0			* 18500	* 18500	* 42650	30500	* 30750	20250	23650	14850	18050	11450	* 14500	10150	390
-1500	* 8500	* 8500	* 12800	* 12800	* 19950	13900	* 14650	9150	10800	6750	8300	5250	* 7500	4900	9490
-60	* 19000	* 19000	* 28900	* 28900	* 43200	29900	* 31750	19750	23250	14500	17900	11250	* 16550	10750	380
-3000	* 13550	* 13550	* 18700	* 18700	* 19100	13900	* 14300	9100	10750	6700			8650	5450	8770
-120	* 30300	* 30300	* 42300	* 42300	* 41300	29900	* 30900	19600	23200	14400			19150	12050	350
-4500	* 19500	* 19500	* 23550	* 23550	* 17000	14150	* 12850	9250	* 9600	6850			* 9200	6650	7690
-180	* 43800	* 43800	* 50850	* 50850	* 36600	30450	* 27600	19900	* 20250	14800			* 20200	14800	300
-6000					* 12900	* 12900	* 9100	* 9100					* 8950	* 8950	6060
-240					* 27150	* 27150							* 19550	* 19550	240

Illustration 135 g06281355

336 LC: 7560 kg (16667 lb) counterweight, 6.5 m (21 ft 4 inch) extreme service reach boom, 3.9 m (12 ft 10 inch) extreme service stick, 600 mm (24 inch) heavy-duty TG track shoes heavy lift ON.

(mm) (inch)	1500 60		3000 120		4500 180		6000 240		7500 300		9000 360				
kg / Lb															(mm) (inch)
9000													* 5550	* 5550	7350
360													* 12350	* 12350	290
7500									* 6750	* 6750			* 5150	* 5150	8540
300									* 14950	* 14950			* 11400	* 11400	340
6000									* 7050	* 7050	* 6700	5950	* 5000	* 5000	9340
240									* 15400	* 15400	* 12900	12750	* 11000	* 11000	370
4500							* 8650	* 8650	* 7700	* 7700	* 7150	5850	* 5000	5000	9840
180							* 18700	* 18700	* 16750	* 16750	* 15650	12550	* 11000	* 11000	390
3000					* 13600	* 13600	* 10250	* 10250	* 8550	7550	* 7600	5700	* 5150	4700	10100
120					* 29200	* 29200	* 22100	* 22100	* 18550	16200	* 16500	12200	* 11350	10350	400
1500					* 16350	14900	* 11750	9900	* 9400	7200	* 8050	5500	* 5500	4550	10130
60					* 35250	32100	* 25350	21300	* 20400	15450	* 17450	11800	* 12050	10050	400
0			* 7650	* 7650	* 17750	14200	* 12800	9450	* 10050	6900	* 8350	5350	* 6000	4650	9930
0			* 17400	* 17400	* 38450	30550	* 27650	20300	* 21800	14850	18100	11450	* 13200	10200	390
-1500	* 8000	* 8000	* 12050	* 12050	* 17950	13950	* 13200	9200	* 10300	6750	8350	5250	* 6850	4900	9490
-60	* 17850	* 17850	* 27250	* 27250	* 38950	30000	* 28550	19800	* 22350	14500	17900	11300	* 15050	10800	380
-3000	* 12750	* 12750	* 17650	* 17650	* 17150	13950	* 12850	9150	* 10000	6700			* 8050	5450	8770
-120	* 28600	* 28600	* 39900	* 39900	* 37150	30000	* 27750	19650	* 21550	14450			* 17750	12100	350
-4500	* 18400	* 18400	* 21200	* 21200	* 15250	14200	* 11500	9250	* 8600	6850			* 8200	6650	7690
-180	* 41350	* 41350	* 45650	* 45650	* 32850	30500	* 24700	19950	* 18100	14850			* 18050	14850	300
-6000					* 11500	* 11500	* 8100	* 8100					* 7950	* 7950	6060
-240					* 24250	* 24250							* 17400	* 17400	240

Illustration 136 g06281349

336 LC: 7560 kg (16667 lb) counterweight, 6.5 m (21 ft 4 inch) extreme service reach boom, 3.9 m (12 ft 10 inch) extreme service stick, 600 mm (24 inch) DG track shoes.

(mm) (inch)	1500 60		3000 120		4500 180		6000 240		7500 300		9000 360				
kg / Lb															(mm) (inch)
9000													* 6100	* 6100	7350
360													* 13600	* 13600	290
7500									* 7500	* 7500			* 5650	* 5650	8540
300									* 16550	* 16550			* 12500	* 12500	340
6000									* 7800	* 7800	* 7350	5950	* 5500	* 5500	9340
240									* 17100	* 17100	* 14200	12750	* 12100	* 12100	370
4500							* 9600	* 9600	* 8550	7900	* 7950	5850	* 5500	5000	9840
180							* 20750	* 20750	* 18600	16950	* 17400	12550	* 12150	11050	390
3000					* 15050	* 15050	* 11350	10500	* 9500	7550	* 8450	5700	* 5700	4700	10100
120					* 32300	* 32300	* 24550	22650	* 20650	16200	* 18400	12200	* 12500	10350	400
1500					* 18100	14900	* 13050	9900	* 10450	7200	8600	5500	* 6050	4550	10130
60					* 39050	32100	* 28200	21300	* 22700	15450	18450	11800	* 13250	10050	400
0			* 8150	* 8150	* 19700	14200	* 14200	9450	11000	6900	8400	5350	* 6600	4650	9930
0			* 18500	* 18500	* 42650	30550	* 30750	20300	23700	14850	18100	11450	* 14500	10200	390
-1500	* 8500	* 8500	* 12800	* 12800	* 19950	13950	* 14650	9200	10850	6750	8350	5250	* 7500	4900	9490
-60	* 19000	* 19000	* 28900	* 28900	* 43200	30000	* 31750	19800	23300	14500	17900	11300	* 16550	10800	380
-3000	* 13550	* 13550	* 18700	* 18700	* 19100	13950	* 14300	9150	10800	6700			8700	5450	8770
-120	* 30300	* 30300	* 42300	* 42300	* 41300	30000	* 30900	19650	23250	14450			19200	12100	350
-4500	* 19500	* 19500	* 23550	* 23550	* 17000	14200	* 12850	9250	* 9600	6850			* 9200	6650	7690
-180	* 43800	* 43800	* 50850	* 50850	* 36600	30500	* 27600	19950	* 20250	14850			* 20200	14850	300
-6000					* 12900	* 12900	* 9100	* 9100					* 8950	* 8950	6060
-240					* 27150	* 27150							* 19550	* 19550	240

Illustration 137 g06281351

336 LC: 7560 kg (16667 lb) counterweight, 6.5 m (21 ft 4 inch) extreme service reach boom, 3.9 m (12 ft 10 inch) extreme service stick, 600 mm (24 inch) DG track shoes heavy lift ON.

336 LN with 7560 kg (16667 lb) Counterweight

6.18 m (20 ft 3 inch) Mass Boom

2.55 m (8 ft 4 inch) Stick

(mm) (inch)	1500 60		3000 120		4500 180		6000 240		7500 300				
kg / Lb													(mm) (inch)
7500							* 9100	* 9100			* 8200	* 8200	6580
300							* 20100	* 20100			* 18150	* 18150	260
6000							* 9400	* 9400	* 8850	7050	* 7800	6900	7600
240							* 20500	* 20500			* 17200	15350	300
4500					* 13200	* 13200	* 10450	9700	* 9150	6900	* 7800	5900	8210
180					* 28350	* 28350	* 22650	20950	* 19900	14750	* 17150	13100	330
3000					* 16100	13700	* 11750	9150	* 9700	6600	* 8100	5450	8520
120					* 34650	29650	* 25400	19750	* 21100	14250	* 17800	12000	340
1500					* 17900	12900	* 12850	8700	* 10250	6350	* 8700	5300	8550
60					* 38650	27750	* 27750	18700	* 22200	13700	* 19150	11600	340
0					* 18050	12600	* 13300	8400	* 10450	6200	* 9250	5400	8310
0					* 39150	27100	* 28750	18100	* 22550	13350	* 20350	11900	330
-1500			* 16800	* 16800	* 17100	12600	* 12900	8350	* 9950	6200	* 9400	5900	7780
-60			* 38050	* 38050	* 37150	27100	* 27950	17950	* 21400	13350	* 20750	13050	310
-3000			* 19550	* 19550	* 15050	12850	* 11450	8450			* 9400	7100	6880
-120			* 42450	* 42450	* 32550	27600	* 24550	18250			* 20700	15750	270
-4500					* 11000	* 11000					* 8650	* 8650	5430
-180					* 23150	* 23150					* 18900	* 18900	210

Illustration 138 g06281379

336 LN: 7560 kg (16667 lb) counterweight, 6.18 m (20 ft 3 inch) mass boom, 2.55 m (8 ft 4 inch) stick, 700 mm (28 inch) TG track shoes.

(mm) (inch)	1500 60		3000 120		4500 180		6000 240		7500 300				
kg / Lb													(mm) (inch)
7500							* 10050	* 10050			* 8950	8850	6580
300							* 22250	* 22250			* 19850	* 19850	260
6000							* 10400	10200	* 9800	7050	* 8550	6900	7600
240							* 22700	21900			* 18800	15350	300
4500					* 14600	* 14600	* 11600	9700	* 10150	6900	* 8550	5900	8210
180					* 31350	* 31350	* 25100	20950	* 22100	14750	* 18750	13100	330
3000					* 17850	13700	* 13050	9150	* 10800	6600	* 8850	5450	8520
120					* 38350	29650	* 28200	19750	* 23400	14250	* 19450	12000	340
1500					* 19850	12900	* 14250	8700	11000	6350	9000	5300	8550
60					* 42850	27750	* 30800	18700	23600	13700	19850	11600	340
0					* 20050	12600	* 14750	8400	10800	6200	9300	5400	8310
0					* 43450	27100	* 31950	18100	23250	13350	20500	11900	330
-1500			* 17750	* 17750	* 19000	12600	* 14350	8350	10800	6200	10250	5900	7780
-60			* 40350	* 40350	* 41250	27100	* 31100	17950	23200	13350	22600	13050	310
-3000			* 21800	* 21800	* 16750	12850	* 12750	8450			* 10500	7100	6880
-120			* 47300	* 47300	* 36250	27600	* 27350	18250			* 23100	15750	270
-4500					* 12300	* 12300					* 9700	* 9700	5430
-180					* 25950	* 25950					* 21200	* 21200	210

Illustration 139 g06281381

336 LN: 7560 kg (16667 lb) counterweight, 6.18 m (20 ft 3 inch) mass boom, 2.55 m (8 ft 4 inch) stick, 700 mm (28 inch) TG track shoes heavy lift ON.

(mm) (inch)	1500 60		3000 120		4500 180		6000 240		7500 300				
kg / Lb													(mm) (inch)
7500							* 9100	* 9100			* 8200	* 8200	6580
300							* 20100	* 20100			* 18150	* 18150	260
6000							* 9400	* 9400	* 8850	7000	* 7800	6800	7600
240							* 20500	* 20500			* 17200	15200	300
4500					* 13200	* 13200	* 10450	9650	* 9150	6800	* 7800	5850	8210
180					* 28350	* 28350	* 22650	20800	* 19900	14650	* 17150	13000	330
3000					* 16100	13600	* 11750	9100	* 9700	6550	* 8100	5400	8520
120					* 34650	29400	* 25400	19600	* 21100	14100	* 17800	11850	340
1500					* 17900	12750	* 12850	8600	* 10250	6300	* 8700	5250	8550
60					* 38650	27550	* 27750	18550	* 22200	13600	* 19150	11500	340
0					* 18050	12500	* 13300	8350	* 10450	6150	9250	5350	8310
0					* 39150	26900	* 28750	17950	* 22550	13250	20300	11800	330
-1500			* 16800	* 16800	* 17100	12500	* 12900	8250	* 9950	6150	* 9400	5850	7780
-60			* 38050	* 38050	* 37150	26900	* 27950	17800	* 21400	13250	* 20750	12900	310
-3000			* 19550	* 19550	* 15050	12700	* 11450	8400			* 9400	7050	6880
-120			* 42450	* 42450	* 32550	27350	* 24550	18100			* 20700	15600	270
-4500					* 11000	* 11000					* 8650	* 8650	5430
-180					* 23150	* 23150					* 18900	* 18900	210

Illustration 140 g06281369

336 LN: 7560 kg (16667 lb) counterweight, 6.18 m (20 ft 3 inch) mass boom, 2.55 m (8 ft 4 inch) stick, 600 mm (24 inch) TG track shoes.

(mm) (inch)	1500 60		3000 120		4500 180		6000 240		7500 300				
kg / Lb													(mm) (inch)
7500							* 10050	* 10050			* 8950	8750	6580
300							* 22250	22100			* 19850	19800	260
6000							* 10400	10100	* 9800	7000	* 8550	6800	7600
240							* 22700	21750			* 18800	15200	300
4500					* 14600	* 14600	* 11600	9650	* 10150	6800	* 8550	5850	8210
180					* 31350	* 31350	* 25100	20800	* 22100	14650	* 18750	13000	330
3000					* 17850	13600	* 13050	9100	* 10800	6550	* 8850	5400	8520
120					* 38350	29400	* 28200	19600	* 23400	14100	* 19450	11850	340
1500					* 19850	12750	* 14250	8600	10900	6300	8950	5250	8550
60					* 42850	27550	* 30800	18550	23400	13600	19700	11500	340
0					* 20050	12500	* 14750	8350	10700	6150	9250	5350	8310
0					* 43450	26900	* 31950	17950	23000	13250	20300	11800	330
-1500			* 17750	* 17750	* 19000	12500	* 14350	8250	10700	6150	10150	5850	7780
-60			* 40350	* 40350	* 41250	26900	* 31100	17800	23000	13250	22400	12900	310
-3000			* 21800	* 21800	* 16750	12700	* 12750	8400			* 10500	7050	6880
-120			* 47300	* 47300	* 36250	27350	* 27350	18100			* 23100	15600	270
-4500					* 12300	* 12300					* 9700	* 9700	5430
-180					* 25950	* 25950					* 21200	* 21200	210

Illustration 141 g06281377

336 LN: 7560 kg (16667 lb) counterweight, 6.18 m (20 ft 3 inch) mass boom, 2.55 m (8 ft 4 inch) stick, 600 mm (24 inch) TG track shoes heavy lift ON.

(mm) (inch)	1500 60		3000 120		4500 180		6000 240		7500 300				
kg / Lb													(mm) (inch)
7500							* 9100	* 9100			* 8200	* 8200	6580
300							* 20100	* 20100			* 18150	* 18150	260
6000							* 9400	* 9400	* 8850	7100	* 7800	6950	7600
240							* 20500	* 20500			* 17200	15450	300
4500					* 13200	* 13200	* 10450	9800	* 9150	6950	* 7800	5950	8210
180					* 28350	* 28350	* 22650	21050	* 19900	14900	* 17150	13200	330
3000					* 16100	13800	* 11750	9200	* 9700	6650	* 8100	5500	8520
120					* 34650	29850	* 25400	19850	* 21100	14350	* 17800	12050	340
1500					* 17900	12950	* 12850	8750	* 10250	6400	* 8700	5300	8550
60					* 38650	27950	* 27750	18850	* 22200	13800	* 19150	11700	340
0					* 18050	12700	* 13300	8450	* 10450	6250	* 9250	5450	8310
0					* 39150	27300	* 28750	18250	* 22550	13450	* 20350	12000	330
-1500			* 16800	* 16800	* 17100	12700	* 12900	8400	* 9950	6250	* 9400	5950	7780
-60			* 38050	* 38050	* 37150	27300	* 27950	18100	* 21400	13450	* 20750	13150	310
-3000			* 19550	* 19550	* 15050	12900	* 11450	8550			* 9400	7150	6880
-120			* 42450	* 42450	* 32550	27800	* 24550	18400			* 20700	15850	270
-4500					* 11000	* 11000					* 8650	* 8650	5430
-180					* 23150	* 23150					* 18900	* 18900	210

Illustration 142 g06281408

336 LN: 7560 kg (16667 lb) counterweight, 6.18 m (20 ft 3 inch) mass boom, 2.55 m (8 ft 4 inch) stick, 600 mm (24 inch) heavy-duty TG track shoes.

(mm) (inch)	1500 60		3000 120		4500 180		6000 240		7500 300				
kg / Lb													(mm) (inch)
7500							* 10050	* 10050			* 8950	8900	6580
300							* 22250	* 22250			* 19850	* 19850	260
6000							* 10400	10250	* 9800	7100	* 8550	6950	7600
240							* 22700	22050			* 18800	15450	300
4500					* 14600	* 14600	* 11600	9800	* 10150	6950	* 8550	5950	8210
180					* 31350	* 31350	* 25100	21050	* 22100	14900	* 18750	13200	330
3000					* 17850	13800	* 13050	9200	* 10800	6650	* 8850	5500	8520
120					* 38350	29850	* 28200	19850	* 23400	14350	* 19450	12050	340
1500					* 19850	12950	* 14250	8750	11050	6400	9100	5300	8550
60					* 42850	27950	* 30800	18850	23800	13800	20000	11700	340
0					* 20050	12700	* 14750	8450	10900	6250	9400	5450	8310
0					* 43450	27300	* 31950	18250	23400	13450	20650	12000	330
-1500			* 17750	* 17750	* 19000	12700	* 14350	8400	10850	6250	10350	5950	7780
-60			* 40350	* 40350	* 41250	27300	* 31100	18100	23400	13450	22800	13150	310
-3000			* 21800	* 21800	* 16750	12900	* 12750	8550			* 10500	7150	6880
-120			* 47300	* 47300	* 36250	27800	* 27350	18400			* 23100	15850	270
-4500					* 12300	* 12300					* 9700	* 9700	5430
-180					* 25950	* 25950					* 21200	* 21200	210

Illustration 143 g06281410

336 LN: 7560 kg (16667 lb) counterweight, 6.18 m (20 ft 3 inch) mass boom, 2.55 m (8 ft 4 inch) stick, 600 mm (24 inch) heavy-duty TG track shoes heavy lift ON.

(mm) (inch)	1500 60		3000 120		4500 180		6000 240		7500 300				
kg / Lb													(mm) (inch)
7500							* 9100	* 9100			* 8200	* 8200	6580
300							* 20100	* 20100			* 18150	* 18150	260
6000							* 9400	* 9400	* 8850	7100	* 7800	6950	7600
240							* 20500	* 20500			* 17200	15450	300
4500					* 13200	* 13200	* 10450	9800	* 9150	6950	* 7800	5950	8210
180					* 28350	* 28350	* 22650	21100	* 19900	14900	* 17150	13200	330
3000					* 16100	13850	* 11750	9250	* 9700	6700	* 8100	5500	8520
120					* 34650	29900	* 25400	19900	* 21100	14350	* 17800	12100	340
1500					* 17900	13000	* 12850	8750	* 10250	6450	* 8700	5350	8550
60					* 38650	28050	* 27750	18900	* 22200	13850	* 19150	11700	340
0					* 18050	12700	* 13300	8500	* 10450	6250	* 9250	5450	8310
0					* 39150	27400	* 28750	18300	* 22550	13500	* 20350	12000	330
-1500			* 16800	* 16800	* 17100	12750	* 12900	8400	* 9950	6250	* 9400	6000	7780
-60			* 38050	* 38050	* 37150	27400	* 27950	18150	* 21400	13500	* 20750	13200	310
-3000			* 19550	* 19550	* 15050	12950	* 11450	8550			* 9400	7150	6880
-120			* 42450	* 42450	* 32550	27850	* 24550	18450			* 20700	15900	270
-4500					* 11000	* 11000					* 8650	* 8650	5430
-180					* 23150	* 23150					* 18900	* 18900	210

Illustration 144 g06281385

336 LN: 7560 kg (16667 lb) counterweight, 6.18 m (20 ft 3 inch) mass boom, 2.55 m (8 ft 4 inch) stick, 600 mm (24 inch) DG track shoes.

(mm) (inch)	1500 60		3000 120		4500 180		6000 240		7500 300				
kg / Lb													(mm) (inch)
7500							* 10050	* 10050			* 8950	8900	6580
300							* 22250	* 22250			* 19850	* 19850	260
6000							* 10400	10250	* 9800	7100	* 8550	6950	7600
240							* 22700	22100			* 18800	15450	300
4500					* 14600	* 14600	* 11600	9800	* 10150	6950	* 8550	5950	8210
180					* 31350	* 31350	* 25100	21100	* 22100	14900	* 18750	13200	330
3000					* 17850	13850	* 13050	9250	* 10800	6700	* 8850	5500	8520
120					* 38350	29900	* 28200	19900	* 23400	14350	* 19450	12100	340
1500					* 19850	13000	* 14250	8750	11100	6450	9100	5350	8550
60					* 42850	28050	* 30800	18900	23850	13850	20050	11700	340
0					* 20050	12700	* 14750	8500	10900	6250	9400	5450	8310
0					* 43450	27400	* 31950	18300	23450	13500	20700	12000	330
-1500			* 17750	* 17750	* 19000	12750	* 14350	8400	10900	6250	10350	6000	7780
-60			* 40350	* 40350	* 41250	27400	* 31100	18150	23450	13500	22850	13200	310
-3000			* 21800	* 21800	* 16750	12950	* 12750	8550			* 10500	7150	6880
-120			* 47300	* 47300	* 36250	27850	* 27350	18450			* 23100	15900	270
-4500					* 12300	* 12300					* 9700	* 9700	5430
-180					* 25950	* 25950					* 21200	* 21200	210

Illustration 145 g06281386

336 LN: 7560 kg (16667 lb) counterweight, 6.18 m (20 ft 3 inch) mass boom, 2.55 m (8 ft 4 inch) stick, 600 mm (24 inch) DG track shoes heavy lift ON.

6.5 m (21 ft 4 inch) Reach Boom

2.8 m (9 ft 2 inch) Stick

(mm) (inch)	1500 60		3000 120		4500 180		6000 240		7500 300		9000				(mm) (inch)
7500													* 8500	7700	7340
300													* 18850	17300	290
6000							* 9100	* 9100	* 8450	7400			* 8200	6300	8250
240							* 19800	* 19800	* 18550	15900			* 18050	14000	330
4500					* 13150	* 13150	* 10350	10000	* 9000	7200			* 8200	5550	8820
180					* 28250	* 28250	* 22400	21600	* 19550	15450			* 18000	12300	350
3000					* 16350	14050	* 11800	9450	* 9700	6900	* 8600	5300	* 8450	5200	9110
120					* 35100	30350	* 25550	20450	* 21050	14900			* 18600	11400	360
1500					* 15900	13250	* 13050	9000	* 10350	6650	8600	5150	8450	5050	9140
60					* 38750	28650	* 28200	19450	* 22500	14350			18550	11100	360
0					* 18600	13000	* 13650	8750	* 10750	6500			8650	5150	8920
0					* 40300	28000	* 29500	18850	* 23250	14000			19050	11350	350
-1500			* 12350	* 12350	* 17900	13000	* 13500	8650	* 10600	6450			* 9100	5550	8420
-60			* 28150	* 28150	* 38800	27950	* 29250	18650	* 22900	13850			* 20050	12250	340
-3000			* 21350	* 21350	* 16250	13150	* 12500	8700	* 9450	6550			* 9250	6450	7600
-120			* 46450	* 46450	* 35200	28300	* 26950	18800					* 20300	14250	300
-4500			* 17000	* 17000	* 13200	* 13200	* 9850	9000					* 9000	8450	6330
-180			* 36550	* 36550	* 28300	* 28300	* 20600	19500					* 19700	18950	250

Illustration 146 g06281418

336 LN: 7560 kg (16667 lb) counterweight, 6.5 m (21 ft 4 inch) reach boom, 2.8 m (9 ft 2 inch) stick, 700 mm (28 inch) TG track shoes.

(mm) (inch)	1500 60		3000 120		4500 180		6000 240		7500 300		9000				(mm) (inch)
7500													* 9300	7700	7340
300													* 20600	17300	290
6000							* 10050	* 10050	* 9350	7400			* 8950	6300	8250
240							* 21850	* 21850	* 20500	15900			* 19700	14000	330
4500					* 14500	* 14500	* 11450	10000	* 9950	7200			* 8950	5550	8820
180					* 31150	* 31150	* 24750	21600	* 21650	15450			* 19700	12300	350
3000					* 18050	14050	* 13100	9450	* 10750	6900	8750	5300	8600	5200	9110
120					* 38800	30350	* 28250	20450	* 23350	14900			18900	11400	360
1500					* 16850	13250	* 14450	9000	11250	6650	8600	5150	8450	5050	9140
60					* 41000	28650	* 31200	19450	24250	14350			18550	11100	360
0					* 19800	13000	* 15100	8750	11050	6500			8650	5150	8920
0					* 44550	28000	* 32700	18850	23800	14000			19050	11350	350
-1500			* 13100	* 13100	* 19800	13000	* 14950	8650	11000	6450			9350	5550	8420
-60			* 29850	* 29850	* 42950	27950	* 32400	18650	23650	13850			20650	12250	340
-3000			* 23600	* 23600	* 18050	13150	* 13850	8700	* 10500	6550			* 10250	6450	7600
-120			* 51500	* 51500	* 39050	28300	* 29900	18800					* 22600	14250	300
-4500			* 18950	* 18950	* 14700	13500	* 10950	9000					* 10000	8450	6330
-180			* 40750	* 40750	* 31500	29100	* 22950	19500					* 21950	18950	250

Illustration 147 g06281419

336 LN: 7560 kg (16667 lb) counterweight, 6.5 m (21 ft 4 inch) reach boom, 2.8 m (9 ft 2 inch) stick, 700 mm (28 inch) TG track shoes heavy lift ON.

(mm) (inch)	1500 60		3000 120		4500 180		6000 240		7500 300		9000				
kg / Lb															(mm) (inch)
7500													* 8500	7650	7340
300													* 18850	17200	290
6000							* 9100	* 9100	* 8450	7350			* 8200	6250	8250
240							* 19800	* 19800	* 18550	15750			* 18050	13900	330
4500					* 13150	* 13150	* 10350	9950	* 9000	7150			* 8200	5500	8820
180					* 28250	* 28250	* 22400	21450	* 19550	15350			* 18000	12200	350
3000					* 16350	13950	* 11800	9400	* 9700	6850	* 8600	5250	* 8450	5150	9110
120					* 35100	30150	* 25550	20250	* 21050	14800			* 18600	11300	360
1500					* 15900	13150	* 13050	8950	* 10350	6600	8550	5100	8350	5000	9140
60					* 38750	28400	* 28200	19300	* 22500	14250			18400	11050	360
0					* 18600	12900	* 13650	8650	* 10750	6450			8550	5100	8920
0					* 40300	27800	* 29500	18700	* 23250	13900			18850	11250	350
-1500			* 12350	* 12350	* 17900	12900	* 13500	8600	* 10600	6400			* 9100	5500	8420
-60			* 28150	* 28150	* 38800	27750	* 29250	18500	* 22900	13750			* 20050	12150	340
-3000			* 21350	* 21350	* 16250	13050	* 12500	8650	* 9450	6500			* 9250	6400	7600
-120			* 46450	* 46450	* 35200	28100	* 26950	18650					* 20300	14100	300
-4500			* 17000	* 17000	* 13200	* 13200	* 9850	8950					* 9000	8350	6330
-180			* 36550	* 36550	* 28300	* 28300	* 20600	19350					* 19700	18800	250

Illustration 148 g06281414

336 LN: 7560 kg (16667 lb) counterweight, 6.5 m (21 ft 4 inch) reach boom, 2.8 m (9 ft 2 inch) stick, 600 mm (24 inch) TG track shoes.

(mm) (inch)	1500 60		3000 120		4500 180		6000 240		7500 300		9000				
kg / Lb															(mm) (inch)
7500													* 9300	7650	7340
300													* 20600	17200	290
6000							* 10050	* 10050	* 9350	7350			* 8950	6250	8250
240							* 21850	* 21850	* 20500	15750			* 19700	13900	330
4500					* 14500	* 14500	* 11450	9950	* 9950	7150			* 8950	5500	8820
180					* 31150	* 31150	* 24750	21450	* 21650	15350			* 19700	12200	350
3000					* 18050	13950	* 13100	9400	* 10750	6850	8650	5250	8500	5150	9110
120					* 38800	30150	* 28250	20250	* 23350	14800			18750	11300	360
1500					* 16850	13150	* 14450	8950	11150	6600	8550	5100	8350	5000	9140
60					* 41000	28400	* 31200	19300	24000	14250			18400	11050	360
0					* 19800	12900	* 15100	8650	10950	6450			8550	5100	8920
0					* 44550	27800	* 32700	18700	23600	13900			18850	11250	350
-1500			* 13100	* 13100	* 19800	12900	* 14950	8600	10900	6400			9300	5500	8420
-60			* 29850	* 29850	* 42950	27750	* 32400	18500	23450	13750			20450	12150	340
-3000			* 23600	* 23600	* 18050	13050	* 13850	8650	* 10500	6500			* 10250	6400	7600
-120			* 51500	* 51500	* 39050	28100	* 29900	18650					* 22600	14100	300
-4500			* 18950	* 18950	* 14700	13400	* 10950	8950					* 10000	8350	6330
-180			* 40750	* 40750	* 31500	28900	* 22950	19350					* 21950	18800	250

Illustration 149 g06281417

336 LN: 7560 kg (16667 lb) counterweight, 6.5 m (21 ft 4 inch) reach boom, 2.8 m (9 ft 2 inch) stick, 600 mm (24 inch) TG track shoes heavy lift ON.

(mm) (inch)	1500 60		3000 120		4500 180		6000 240		7500 300		9000				(mm) (inch)
7500													* 8500	7750	7340
300													* 18850	17400	290
6000							* 9100	* 9100	* 8450	7450			* 8200	6350	8250
240							* 19800	* 19800	* 18550	16000			* 18050	14100	330
4500					* 13150	* 13150	* 10350	10100	* 9000	7250			* 8200	5600	8820
180					* 28250	* 28250	* 22400	21750	* 19550	15600			* 18000	12400	350
3000					* 16350	14150	* 11800	9550	* 9700	6950	* 8600	5300	* 8450	5200	9110
120					* 35100	30550	* 25550	20550	* 21050	15000			* 18600	11500	360
1500					* 15900	13350	* 13050	9100	* 10350	6700	8700	5200	8500	5100	9140
60					* 38750	28800	* 28200	19600	* 22500	14450			18700	11200	360
0					* 18600	13100	* 13650	8800	* 10750	6550			8700	5200	8920
0					* 40300	28200	* 29500	19000	* 23250	14100			19200	11450	350
-1500			* 12350	* 12350	* 17900	13100	* 13500	8700	* 10600	6500			* 9100	5600	8420
-60			* 28150	* 28150	* 38800	28150	* 29250	18800	* 22900	13950			* 20050	12350	340
-3000			* 21350	* 21350	* 16250	13250	* 12500	8800	* 9450	6600			* 9250	6500	7600
-120			* 46450	* 46450	* 35200	28500	* 26950	18950					* 20300	14350	300
-4500			* 17000	* 17000	* 13200	* 13200	* 9850	9100					* 9000	8500	6330
-180			* 36550	* 36550	* 28300	* 28300	* 20600	19650					* 19700	19050	250

Illustration 150 g06281427

336 LN: 7560 kg (16667 lb) counterweight, 6.5 m (21 ft 4 inch) reach boom, 2.8 m (9 ft 2 inch) stick, 600 mm (24 inch) heavy-duty TG track shoes.

(mm) (inch)	1500 60		3000 120		4500 180		6000 240		7500 300		9000				(mm) (inch)
7500													* 9300	7750	7340
300													* 20600	17400	290
6000							* 10050	* 10050	* 9350	7450			* 8950	6350	8250
240							* 21850	* 21850	* 20500	16000			* 19700	14100	330
4500					* 14500	* 14500	* 11450	10100	* 9950	7250			* 8950	5600	8820
180					* 31150	* 31150	* 24750	21750	* 21650	15600			* 19700	12400	350
3000					* 18050	14150	* 13100	9550	* 10750	6950	8800	5300	8650	5200	9110
120					* 38800	30550	* 28250	20550	* 23350	15000			19050	11500	360
1500					* 16850	13350	* 14450	9100	11350	6700	8700	5200	8500	5100	9140
60					* 41000	28800	* 31200	19600	24400	14450			18700	11200	360
0					* 19800	13100	* 15100	8800	11150	6550			8700	5200	8920
0					* 44550	28200	* 32700	19000	24000	14100			19200	11450	350
-1500			* 13100	* 13100	* 19800	13100	* 14950	8700	11100	6500			9450	5600	8420
-60			* 29850	* 29850	* 42950	28150	* 32400	18800	23850	13950			20800	12350	340
-3000			* 23600	* 23600	* 18050	13250	* 13850	8800	* 10500	6600			* 10250	6500	7600
-120			* 51500	* 51500	* 39050	28500	* 29900	18950					* 22600	14350	300
-4500			* 18950	* 18950	* 14700	13600	* 10950	9100					* 10000	8500	6330
-180			* 40750	* 40750	* 31500	29300	* 22950	19650					* 21950	19050	250

Illustration 151 g06281428

336 LN: 7560 kg (16667 lb) counterweight, 6.5 m (21 ft 4 inch) reach boom, 2.8 m (9 ft 2 inch) stick, 600 mm (24 inch) heavy-duty TG track shoes heavy lift ON.

(mm) (inch)	1500 60		3000 120		4500 180		6000 240		7500 300		9000				
kg / Lb															(mm) (inch)
7500													* 8500	7750	7340
300													* 18850	17450	290
6000							* 9100	* 9100	* 8450	7450			* 8200	6350	8250
240							* 19800	* 19800	* 18550	16000			* 18050	14150	330
4500					* 13150	* 13150	* 10350	10100	* 9000	7250			* 8200	5600	8820
180					* 28250	* 28250	* 22400	21750	* 19550	15600			* 18000	12400	350
3000					* 16350	14200	* 11800	9550	* 9700	7000	* 8600	5350	* 8450	5250	9110
120					* 35100	30650	* 25550	20600	* 21050	15050			* 18600	11550	360
1500					* 15900	13400	* 13050	9100	* 10350	6750	8700	5200	8500	5100	9140
60					* 38750	28900	* 28200	19650	* 22500	14500			18750	11250	360
0					* 18600	13150	* 13650	8850	* 10750	6550			8750	5200	8920
0					* 40300	28250	* 29500	19050	* 23250	14150			19250	11450	350
-1500			* 12350	* 12350	* 17900	13150	* 13500	8750	* 10600	6500			* 9100	5600	8420
-60			* 28150	* 28150	* 38800	28250	* 29250	18850	* 22900	14000			* 20050	12350	340
-3000			* 21350	* 21350	* 16250	13300	* 12500	8800	* 9450	6600			* 9250	6500	7600
-120			* 46450	* 46450	* 35200	28600	* 26950	19000					* 20300	14400	300
-4500			* 17000	* 17000	* 13200	* 13200	* 9850	9100					* 9000	8500	6330
-180			* 36550	* 36550	* 28300	* 28300	* 20600	19700					* 19700	19100	250

Illustration 152 g06281423

336 LN: 7560 kg (16667 lb) counterweight, 6.5 m (21 ft 4 inch) reach boom, 2.8 m (9 ft 2 inch) stick, 600 mm (24 inch) DG track shoes.

(mm) (inch)	1500 60		3000 120		4500 180		6000 240		7500 300		9000				
kg / Lb															(mm) (inch)
7500													* 9300	7750	7340
300													* 20600	17450	290
6000							* 10050	* 10050	* 9350	7450			* 8950	6350	8250
240							* 21850	* 21850	* 20500	16000			* 19700	14150	330
4500					* 14500	* 14500	* 11450	10100	* 9950	7250			* 8950	5600	8820
180					* 31150	* 31150	* 24750	21750	* 21650	15600			* 19700	12400	350
3000					* 18050	14200	* 13100	9550	* 10750	7000	8850	5350	8650	5250	9110
120					* 38800	30650	* 28250	20600	* 23350	15050			19100	11550	360
1500					* 16850	13400	* 14450	9100	11350	6750	8700	5200	8500	5100	9140
60					* 41000	28900	* 31200	19650	24450	14500			18750	11250	360
0					* 19800	13150	* 15100	8850	11200	6550			8750	5200	8920
0					* 44550	28250	* 32700	19050	24050	14150			19250	11450	350
-1500			* 13100	* 13100	* 19800	13150	* 14950	8750	11100	6500			9450	5600	8420
-60			* 29850	* 29850	* 42950	28250	* 32400	18850	23900	14000			20850	12350	340
-3000			* 23600	* 23600	* 18050	13300	* 13850	8800	* 10500	6600			* 10250	6500	7600
-120			* 51500	* 51500	* 39050	28600	* 29900	19000					* 22600	14400	300
-4500			* 18950	* 18950	* 14700	13650	* 10950	9100					* 10000	8500	6330
-180			* 40750	* 40750	* 31500	29350	* 22950	19700					* 21950	19100	250

Illustration 153 g06281425

336 LN: 7560 kg (16667 lb) counterweight, 6.5 m (21 ft 4 inch) reach boom, 2.8 m (9 ft 2 inch) stick, 600 mm (24 inch) DG track shoes heavy lift ON.

6.5 m (21 ft 4 inch) Extreme Service Reach Boom

2.8 m (9 ft 2 inch) Extreme Service Stick

(mm) (inch)	1500 60		3000 120		4500 180		6000 240		7500 300		9000				
kg / Lb															(mm) (inch)
7500													* 8400	7600	7340
300													* 18550	17150	290
6000							* 9000	* 9000	* 8350	7300			* 8150	6200	8250
240							* 19550	* 19550	* 18250	15700			* 17950	13800	330
4500					* 13000	* 13000	* 10200	9950	* 8850	7100			* 8150	5450	8820
180					* 27900	* 27900	* 22050	21400	* 19200	15250			* 17950	12050	350
3000					* 16100	13900	* 11650	9350	* 9550	6800	* 8450	5150	* 8400	5100	9110
120					* 34600	30000	* 25150	20150	* 20700	14650			* 18450	11200	360
1500					* 15850	13050	* 12850	8850	* 10200	6550	8500	5050	8350	4950	9140
60					* 38650	28150	* 27750	19100	* 22100	14100			18350	10850	360
0					* 18300	12750	* 13400	8600	* 10550	6350			8550	5050	8920
0					* 39650	27500	* 29050	18500	* 22850	13700			18800	11100	350
-1500			* 12300	* 12300	* 17600	12750	* 13300	8500	* 10400	6300			* 8950	5450	8420
-60			* 28050	* 28050	* 38150	27450	* 28750	18250	* 22500	13550			* 19700	11950	340
-3000			* 21000	* 21000	* 16000	12950	* 12250	8550	* 9250	6400			* 9050	6300	7600
-120			* 45600	* 45600	* 34600	27800	* 26450	18450					* 19900	13950	300
-4500			* 16650	* 16650	* 12950	* 12950	* 9650	8850					* 8800	8300	6330
-180			* 35800	* 35800	* 27750	* 27750	* 20150	19200					* 19250	18600	250

Illustration 154 g06281434

336 LN: 7560 kg (16667 lb) counterweight, 6.5 m (21 ft 4 inch) extreme service reach boom, 2.8 m (9 ft 2 inch) extreme service stick, 700 mm (28 inch) TG track shoes.

(mm) (inch)	1500 60		3000 120		4500 180		6000 240		7500 300		9000				
kg / Lb															(mm) (inch)
7500													* 9250	7600	7340
300													* 20500	17150	290
6000							* 9950	* 9950	* 9250	7300			* 8900	6200	8250
240							* 21600	* 21600	* 20200	15700			* 19650	13800	330
4500					* 14350	* 14350	* 11300	9950	* 9800	7100			* 8900	5450	8820
180					* 30800	* 30800	* 24400	21400	* 21300	15250			* 19600	12050	350
3000					* 17850	13900	* 12900	9350	* 10600	6800	8650	5150	8500	5100	9110
120					* 38300	30000	* 27850	20150	* 23000	14650			18700	11200	360
1500					* 16800	13050	* 14250	8850	11150	6550	8500	5050	8350	4950	9140
60					* 40950	28150	* 30750	19100	24000	14100			18350	10850	360
0					* 19800	12750	* 14900	8600	10950	6350			8550	5050	8920
0					* 43950	27500	* 32200	18500	23550	13700			18800	11100	350
-1500			* 13050	* 13050	* 19500	12750	* 14750	8500	10850	6300			9250	5450	8420
-60			* 29750	* 29750	* 42350	27450	* 31900	18250	23400	13550			20400	11950	340
-3000			* 23300	* 23300	* 17750	12950	* 13650	8550	* 10350	6400			* 10100	6300	7600
-120			* 50700	* 50700	* 38450	27800	* 29400	18450					* 22200	13950	300
-4500			* 18600	* 18600	* 14450	13300	* 10750	8850					* 9800	8300	6330
-180			* 39950	* 39950	* 30950	28650	* 22550	19200					* 21550	18600	250

Illustration 155 g06281438

336 LN: 7560 kg (16667 lb) counterweight, 6.5 m (21 ft 4 inch) extreme service reach boom, 2.8 m (9 ft 2 inch) extreme service stick, 700 mm (28 inch) TG track shoes heavy lift ON.

(mm) (inch)	1500 60		3000 120		4500 180		6000 240		7500 300		9000				(mm) (inch)
7500													* 8400	7550	7340
300													* 18550	17000	290
6000							* 9000	* 9000	* 8350	7250			* 8150	6150	8250
240							* 19550	* 19550	* 18250	15550			* 17950	13700	330
4500					* 13000	* 13000	* 10200	9850	* 8850	7050			* 8150	5400	8820
180					* 27900	* 27900	* 22050	21250	* 19200	15150			* 17950	11950	350
3000					* 16100	13800	* 11650	9250	* 9550	6750	* 8450	5150	* 8400	5050	9110
120					* 34600	29800	* 25150	20000	* 20700	14550			* 18450	11100	360
1500					* 15850	12950	* 12850	8800	* 10200	6500	8450	5000	8250	4900	9140
60					* 38650	27900	* 27750	18950	* 22100	13950			18150	10750	360
0					* 18300	12650	* 13400	8500	* 10550	6300			8450	5000	8920
0					* 39650	27250	* 29050	18300	* 22850	13600			18650	11000	350
-1500			* 12300	* 12300	* 17600	12650	* 13300	8400	* 10400	6250			* 8950	5400	8420
-60			* 28050	* 28050	* 38150	27200	* 28750	18100	* 22500	13450			* 19700	11850	340
-3000			* 21000	* 21000	* 16000	12800	* 12250	8500	* 9250	6350			* 9050	6250	7600
-120			* 45600	* 45600	* 34600	27600	* 26450	18250					* 19900	13800	300
-4500			* 16650	* 16650	* 12950	* 12950	* 9650	8800					* 8800	8250	6330
-180			* 35800	* 35800	* 27750	* 27750	* 20150	19000					* 19250	18450	250

Illustration 156 g06281432

336 LN: 7560 kg (16667 lb) counterweight, 6.5 m (21 ft 4 inch) extreme service reach boom, 2.8 m (9 ft 2 inch) extreme service stick, 600 mm (24 inch) TG track shoes.

(mm) (inch)	1500 60		3000 120		4500 180		6000 240		7500 300		9000				(mm) (inch)
7500													* 9250	7550	7340
300													* 20500	17000	290
6000							* 9950	* 9950	* 9250	7250			* 8900	6150	8250
240							* 21600	* 21600	* 20200	15550			* 19650	13700	330
4500					* 14350	* 14350	* 11300	9850	* 9800	7050			* 8900	5400	8820
180					* 30800	* 30800	* 24400	21250	* 21300	15150			* 19600	11950	350
3000					* 17850	13800	* 12900	9250	* 10600	6750	8550	5150	8400	5050	9110
120					* 38300	29800	* 27850	20000	* 23000	14550			18550	11100	360
1500					* 16800	12950	* 14250	8800	11050	6500	8450	5000	8250	4900	9140
60					* 40950	27900	* 30750	18950	23800	13950			18150	10750	360
0					* 19800	12650	* 14900	8500	10850	6300			8450	5000	8920
0					* 43950	27250	* 32200	18300	23350	13600			18650	11000	350
-1500			* 13050	* 13050	* 19500	12650	* 14750	8400	10750	6250			9150	5400	8420
-60			* 29750	* 29750	* 42350	27200	* 31900	18100	23200	13450			20200	11850	340
-3000			* 23300	* 23300	* 17750	12800	* 13650	8500	* 10350	6350			* 10100	6250	7600
-120			* 50700	* 50700	* 38450	27600	* 29400	18250					* 22200	13800	300
-4500			* 18600	* 18600	* 14450	13200	* 10750	8800					* 9800	8250	6330
-180			* 39950	* 39950	* 30950	28450	* 22550	19000					* 21550	18450	250

Illustration 157 g06281433

336 LN: 7560 kg (16667 lb) counterweight, 6.5 m (21 ft 4 inch) extreme service reach boom, 2.8 m (9 ft 2 inch) extreme service stick, 600 mm (24 inch) TG track shoes heavy lift ON.

(mm) (inch)	1500 60		3000 120		4500 180		6000 240		7500 300		9000				(mm) (inch)
7500													* 8400	7650	7340
300													* 18550	17250	290
6000							* 9000	* 9000	* 8350	7350			* 8150	6250	8250
240							* 19550	* 19550	* 18250	15800			* 17950	13900	330
4500					* 13000	* 13000	* 10200	10000	* 8850	7150			* 8150	5500	8820
180					* 27900	* 27900	* 22050	21550	* 19200	15350			* 17950	12150	350
3000					* 16100	14000	* 11650	9400	* 9550	6850	* 8450	5200	* 8400	5100	9110
120					* 34600	30200	* 25150	20300	* 20700	14750			* 18450	11250	360
1500					* 15850	13150	* 12850	8950	* 10200	6600	8600	5100	8400	5000	9140
60					* 38650	28350	* 27750	19250	* 22100	14200			18450	10950	360
0					* 18300	12850	* 13400	8650	* 10550	6400			8600	5100	8920
0					* 39650	27700	* 29050	18600	* 22850	13800			18950	11150	350
-1500			* 12300	* 12300	* 17600	12850	* 13300	8550	* 10400	6350			* 8950	5450	8420
-60			* 28050	* 28050	* 38150	27650	* 28750	18400	* 22500	13650			* 19700	12050	340
-3000			* 21000	* 21000	* 16000	13000	* 12250	8600	* 9250	6450			* 9050	6350	7600
-120			* 45600	* 45600	* 34600	28000	* 26450	18550					* 19900	14050	300
-4500			* 16650	* 16650	* 12950	* 12950	* 9650	8900					* 8800	8350	6330
-180			* 35800	* 35800	* 27750	* 27750	* 20150	19300					* 19250	18750	250

Illustration 158 g06281445

336 LN: 7560 kg (16667 lb) counterweight, 6.5 m (21 ft 4 inch) extreme service reach boom, 2.8 m (9 ft 2 inch) extreme service stick, 600 mm (24 inch) heavy-duty TG track shoes.

(mm) (inch)	1500 60		3000 120		4500 180		6000 240		7500 300		9000				(mm) (inch)
7500													* 9250	7650	7340
300													* 20500	17250	290
6000							* 9950	* 9950	* 9250	7350			* 8900	6250	8250
240							* 21600	* 21600	* 20200	15800			* 19650	13900	330
4500					* 14350	* 14350	* 11300	10000	* 9800	7150			* 8900	5500	8820
180					* 30800	* 30800	* 24400	21550	* 21300	15350			* 19600	12150	350
3000					* 17850	14000	* 12900	9400	* 10600	6850	8700	5200	8550	5100	9110
120					* 38300	30200	* 27850	20300	* 23000	14750			18850	11250	360
1500					* 16800	13150	* 14250	8950	11250	6600	8600	5100	8400	5000	9140
60					* 40950	28350	* 30750	19250	24200	14200			18450	10950	360
0					* 19800	12850	* 14900	8650	11050	6400			8600	5100	8920
0					* 43950	27700	* 32200	18600	23750	13800			18950	11150	350
-1500			* 13050	* 13050	* 19500	12850	* 14750	8550	10950	6350			9300	5450	8420
-60			* 29750	* 29750	* 42350	27650	* 31900	18400	23600	13650			20550	12050	340
-3000			* 23300	* 23300	* 17750	13000	* 13650	8600	* 10350	6450			* 10100	6350	7600
-120			* 50700	* 50700	* 38450	28000	* 29400	18550					* 22200	14050	300
-4500			* 18600	* 18600	* 14450	13400	* 10750	8900					* 9800	8350	6330
-180			* 39950	* 39950	* 30950	28850	* 22550	19300					* 21550	18750	250

Illustration 159 g06281446

336 LN: 7560 kg (16667 lb) counterweight, 6.5 m (21 ft 4 inch) extreme service reach boom, 2.8 m (9 ft 2 inch) extreme service stick, 600 mm (24 inch) heavy-duty TG track shoes heavy lift ON.

(mm) (inch)	1500 60		3000 120		4500 180		6000 240		7500 300		9000				
kg / Lb															(mm) (inch)
7500													* 8400	7700	7340
300													* 18550	17300	290
6000							* 9000	* 9000	* 8350	7400			* 8150	6250	8250
240							* 19550	* 19550	* 18250	15850			* 17950	13900	330
4500					* 13000	* 13000	* 10200	10000	* 8850	7150			* 8150	5500	8820
180					* 27900	* 27900	* 22050	21600	* 19200	15400			* 17950	12200	350
3000					* 16100	14000	* 11650	9450	* 9550	6900	* 8450	5200	* 8400	5150	9110
120					* 34600	30300	* 25150	20350	* 20700	14800			* 18450	11300	360
1500					* 15850	13150	* 12850	8950	* 10200	6600	8600	5100	8400	5000	9140
60					* 38650	28400	* 27750	19300	* 22100	14250			18500	11000	360
0					* 18300	12900	* 13400	8650	* 10550	6400			8650	5100	8920
0					* 39650	27750	* 29050	18650	* 22850	13850			19000	11200	350
-1500			* 12300	* 12300	* 17600	12900	* 13300	8550	* 10400	6350			* 8950	5500	8420
-60			* 28050	* 28050	* 38150	27700	* 28750	18450	* 22500	13700			* 19700	12100	340
-3000			* 21000	* 21000	* 16000	13050	* 12250	8650	* 9250	6450			* 9050	6350	7600
-120			* 45600	* 45600	* 34600	28100	* 26450	18600					* 19900	14100	300
-4500			* 16650	* 16650	* 12950	* 12950	* 9650	8950					* 8800	8400	6330
-180			* 35800	* 35800	* 27750	* 27750	* 20150	19350					* 19250	18800	250

Illustration 160 g06281440

336 LN: 7560 kg (16667 lb) counterweight, 6.5 m (21 ft 4 inch) extreme service reach boom, 2.8 m (9 ft 2 inch) extreme service stick, 600 mm (24 inch) DG track shoes.

(mm) (inch)	1500 60		3000 120		4500 180		6000 240		7500 300		9000				
kg / Lb															(mm) (inch)
7500													* 9250	7700	7340
300													* 20500	17300	290
6000							* 9950	* 9950	* 9250	7400			* 8900	6250	8250
240							* 21600	* 21600	* 20200	15850			* 19650	13900	330
4500					* 14350	* 14350	* 11300	10000	* 9800	7150			* 8900	5500	8820
180					* 30800	* 30800	* 24400	21600	* 21300	15400			* 19600	12200	350
3000					* 17850	14000	* 12900	9450	* 10600	6900	8750	5200	8600	5150	9110
120					* 38300	30300	* 27850	20350	* 23000	14800			18900	11300	360
1500					* 16800	13150	* 14250	8950	11250	6600	8600	5100	8400	5000	9140
60					* 40950	28400	* 30750	19300	24250	14250			18500	11000	360
0					* 19800	12900	* 14900	8650	11050	6400			8650	5100	8920
0					* 43950	27750	* 32200	18650	23800	13850			19000	11200	350
-1500			* 13050	* 13050	* 19500	12900	* 14750	8550	11000	6350			9350	5500	8420
-60			* 29750	* 29750	* 42350	27700	* 31900	18450	23650	13700			20600	12100	340
-3000			* 23300	* 23300	* 17750	13050	* 13650	8650	* 10350	6450			* 10100	6350	7600
-120			* 50700	* 50700	* 38450	28100	* 29400	18600					* 22200	14100	300
-4500			* 18600	* 18600	* 14450	13400	* 10750	8950					* 9800	8400	6330
-180			* 39950	* 39950	* 30950	28950	* 22550	19350					* 21550	18800	250

Illustration 161 g06281443

336 LN: 7560 kg (16667 lb) counterweight, 6.5 m (21 ft 4 inch) extreme service reach boom, 2.8 m (9 ft 2 inch) extreme service stick, 600 mm (24 inch) DG track shoes heavy lift ON.

6.5 m (21 ft 4 inch) Reach Boom

3.2 m (10 ft 6 inch) Stick

(mm) (inch)	1500 60		3000 120		4500 180		6000 240		7500 300		9000 360				(mm) (inch)
7500									* 7900	7550			* 6700	* 6700	7700
300													* 14850	* 14850	300
6000									* 8000	7450			* 6500	5950	8580
240									* 17450	16000			* 14350	13200	340
4500					* 12200	* 12200	* 9800	* 9800	* 8600	7250	* 7700	5400	* 6550	5300	9130
180							* 21200	* 21200	* 18650	15550			* 14450	11650	360
3000					* 15450	14300	* 11350	9550	* 9350	6950	* 8300	5300	* 6800	4950	9410
120					* 33150	30900	* 24500	20600	* 20300	14950	* 18050	11350	* 15000	10850	370
1500					* 17750	13400	* 12700	9050	* 10100	6650	8600	5150	* 7300	4800	9440
60					* 38300	28850	* 27400	19500	* 21900	14350	18500	11050	* 16050	10550	380
0					* 18500	13000	* 13450	8750	* 10600	6450	8500	5050	* 8100	4900	9220
0					* 40100	27950	* 29150	18800	* 22950	13950	18250	10850	* 17850	10750	370
-1500			* 13250	* 13250	* 18150	12900	* 13550	8600	* 10650	6350			* 8800	5200	8750
-60			* 29950	* 29950	* 39300	27750	* 29300	18500	* 23000	13700			* 19400	11500	350
-3000			* 20900	* 20900	* 16800	13000	* 12800	8600	* 9900	6400			* 9050	5950	7960
-120			* 47350	* 47350	* 36400	28000	* 27600	18550	* 21200	13850			* 19900	13200	320
-4500			* 18850	* 18850	* 14200	13300	* 10750	8850					* 9050	7600	6750
-180			* 40600	* 40600	* 30500	28650	* 22850	19050					* 19900	16950	270

Illustration 162 g06281453

336 LN: 7560 kg (16667 lb) counterweight, 6.5 m (21 ft 4 inch) reach boom, 3.2 m (10 ft 6 inch) stick, 700 mm (28 inch) TG track shoes.

(mm) (inch)	1500 60		3000 120		4500 180		6000 240		7500 300		9000 360				(mm) (inch)
7500									* 8700	7550			* 7350	7200	7700
300													* 16250	16100	300
6000									* 8850	7450			* 7150	5950	8580
240									* 19350	16000			* 15700	13200	340
4500					* 13450	* 13450	* 10850	10100	* 9500	7250	* 8450	5400	* 7200	5300	9130
180							* 23450	21800	* 20650	15550			* 15800	11650	360
3000					* 17050	14300	* 12550	9550	* 10400	6950	8750	5300	* 7450	4950	9410
120					* 36650	30900	* 27100	20600	* 22550	14950	18800	11350	* 16400	10850	370
1500					* 19650	13400	* 14050	9050	* 11200	6650	8600	5150	* 8000	4800	9440
60					* 42400	28850	* 30350	19500	24250	14350	18500	11050	* 17600	10550	380
0					* 20500	13000	* 14900	8750	11050	6450	8500	5050	8200	4900	9220
0					* 44400	27950	* 32300	18800	23750	13950	18250	10850	18050	10750	370
-1500			* 14050	* 14050	* 20100	12900	* 15000	8600	10950	6350			8800	5200	8750
-60			* 31750	* 31750	* 43550	27750	* 32500	18500	23500	13700			19450	11500	350
-3000			* 22150	* 22150	* 18650	13000	* 14200	8600	10950	6400			* 10050	5950	7960
-120			* 50150	* 50150	* 40350	28000	* 30650	18550	* 23550	13850			* 22150	13200	320
-4500			* 20950	* 20950	* 15800	13300	* 11950	8850					* 10100	7600	6750
-180			* 45150	* 45150	* 33950	28650	* 25450	19050					* 22200	16950	270

Illustration 163 g06281454

336 LN: 7560 kg (16667 lb) counterweight, 6.5 m (21 ft 4 inch) reach boom, 3.2 m (10 ft 6 inch) stick, 700 mm (28 inch) TG track shoes heavy lift ON.

(mm) (inch)	1500 60		3000 120		4500 180		6000 240		7500 300		9000 360				(mm) (inch)
7500									* 7900	7450			* 6700	* 6700	7700
300													* 14850	* 14850	300
6000									* 8000	7400			* 6500	5900	8580
240									* 17450	15900			* 14350	13100	340
4500					* 12200	* 12200	* 9800	* 9800	* 8600	7200	* 7700	5350	* 6550	5250	9130
180							* 21200	* 21200	* 18650	15450			* 14450	11600	360
3000					* 15450	14200	* 11350	9450	* 9350	6900	* 8300	5250	* 6800	4900	9410
120					* 33150	30650	* 24500	20450	* 20300	14850	* 18050	11250	* 15000	10750	370
1500					* 17750	13250	* 12700	9000	* 10100	6600	8500	5100	* 7300	4750	9440
60					* 38300	28600	* 27400	19350	* 21900	14250	18350	10950	* 16050	10450	380
0					* 18500	12850	* 13450	8650	* 10600	6400	8400	5000	* 8100	4850	9220
0					* 40100	27700	* 29150	18650	* 22950	13800	18100	10750	* 17850	10650	370
-1500			* 13250	* 13250	* 18150	12800	* 13550	8500	* 10650	6300			8750	5150	8750
-60			* 29950	* 29950	* 39300	27500	* 29300	18350	* 23000	13600			19250	11400	350
-3000			* 20900	* 20900	* 16800	12900	* 12800	8550	* 9900	6350			* 9050	5900	7960
-120			* 47350	* 47350	* 36400	27750	* 27600	18400	* 21200	13700			* 19900	13050	320
-4500			* 18850	* 18850	* 14200	13200	* 10750	8750					* 9050	7550	6750
-180			* 40600	* 40600	* 30500	28400	* 22850	18900					* 19900	16850	270

Illustration 164 g06281451

336 LN: 7560 kg (16667 lb) counterweight, 6.5 m (21 ft 4 inch) reach boom, 3.2 m (10 ft 6 inch) stick, 600 mm (24 inch) TG track shoes.

(mm) (inch)	1500 60		3000 120		4500 180		6000 240		7500 300		9000 360				(mm) (inch)
7500									* 8700	7450			* 7350	7150	7700
300													* 16250	16000	300
6000									* 8850	7400			* 7150	5900	8580
240									* 19350	15900			* 15700	13100	340
4500					* 13450	* 13450	* 10850	10050	* 9500	7200	* 8450	5350	* 7200	5250	9130
180							* 23450	21650	* 20650	15450			* 15800	11600	360
3000					* 17050	14200	* 12550	9450	* 10400	6900	8700	5250	* 7450	4900	9410
120					* 36650	30650	* 27100	20450	* 22550	14850	18650	11250	* 16400	10750	370
1500					* 19650	13250	* 14050	9000	11150	6600	8500	5100	7950	4750	9440
60					* 42400	28600	* 30350	19350	24050	14250	18350	10950	17500	10450	380
0					* 20500	12850	* 14900	8650	10950	6400	8400	5000	8150	4850	9220
0					* 44400	27700	* 32300	18650	23550	13800	18100	10750	17900	10650	370
-1500			* 14050	* 14050	* 20100	12800	* 15000	8500	10850	6300			8750	5150	8750
-60			* 31750	* 31750	* 43550	27500	* 32500	18350	23300	13600			19250	11400	350
-3000			* 22150	* 22150	* 18650	12900	* 14200	8550	10850	6350			10050	5900	7960
-120			* 50150	* 50150	* 40350	27750	* 30650	18400	23450	13700			* 22150	13050	320
-4500			* 20950	* 20950	* 15800	13200	* 11950	8750					* 10100	7550	6750
-180			* 45150	* 45150	* 33950	28400	* 25450	18900					* 22200	16850	270

Illustration 165 g06281452

336 LN: 7560 kg (16667 lb) counterweight, 6.5 m (21 ft 4 inch) reach boom, 3.2 m (10 ft 6 inch) stick, 600 mm (24 inch) TG track shoes heavy lift ON.

(mm) (inch)	1500 60		3000 120		4500 180		6000 240		7500 300		9000 360				
kg / Lb															(mm) (inch)
7500									* 7900	7550			* 6700	* 6700	7700
300													* 14850	* 14850	300
6000									* 8000	7500			* 6500	6000	8580
240									* 17450	16100			* 14350	13300	340
4500					* 12200	* 12200	* 9800	* 9800	* 8600	7300	* 7700	5450	* 6550	5300	9130
180							* 21200	* 21200	* 18650	15650			* 14450	11750	360
3000					* 15450	14400	* 11350	9600	* 9350	7000	* 8300	5350	* 6800	4950	9410
120					* 33150	31100	* 24500	20750	* 20300	15050	* 18050	11450	* 15000	10950	370
1500					* 17750	13450	* 12700	9100	* 10100	6700	* 8600	5200	* 7300	4850	9440
60					* 38300	29050	* 27400	19650	* 21900	14450	18650	11150	* 16050	10650	380
0					* 18500	13050	* 13450	8800	* 10600	6500	8550	5100	* 8100	4900	9220
0					* 40100	28150	* 29150	18950	* 22950	14050	18400	10950	* 17850	10800	370
-1500			* 13250	* 13250	* 18150	13000	* 13550	8650	* 10650	6400			* 8800	5250	8750
-60			* 29950	* 29950	* 39300	27950	* 29300	18650	* 23000	13800			* 19400	11600	350
-3000			* 20900	* 20900	* 16800	13100	* 12800	8700	* 9900	6450			* 9050	6000	7960
-120			* 47350	* 47350	* 36400	28200	* 27600	18700	* 21200	13950			* 19900	13300	320
-4500			* 18850	* 18850	* 14200	13400	* 10750	8900					* 9050	7650	6750
-180			* 40600	* 40600	* 30500	28850	* 22850	19200					* 19900	17100	270

Illustration 166 g06281460

336 LN: 7560 kg (16667 lb) counterweight, 6.5 m (21 ft 4 inch) reach boom, 3.2 m (10 ft 6 inch) stick, 600 mm (24 inch) heavy-duty TG track shoes.

(mm) (inch)	1500 60		3000 120		4500 180		6000 240		7500 300		9000 360				
kg / Lb															(mm) (inch)
7500									* 8700	7550			* 7350	7250	7700
300													* 16250	16200	300
6000									* 8850	7500			* 7150	6000	8580
240									* 19350	16100			* 15700	13300	340
4500					* 13450	* 13450	* 10850	10200	* 9500	7300	* 8450	5450	* 7200	5300	9130
180							* 23450	21950	* 20650	15650			* 15800	11750	360
3000					* 17050	14400	* 12550	9600	* 10400	7000	8800	5350	* 7450	4950	9410
120					* 36650	31100	* 27100	20750	* 22550	15050	18950	11450	* 16400	10950	370
1500					* 19650	13450	* 14050	9100	* 11200	6700	8650	5200	* 8000	4850	9440
60					* 42400	29050	* 30350	19650	* 24300	14450	18650	11150	* 17600	10650	380
0					* 20500	13050	* 14900	8800	11100	6500	8550	5100	8250	4900	9220
0					* 44400	28150	* 32300	18950	23950	14050	18400	10950	18200	10800	370
-1500			* 14050	* 14050	* 20100	13000	* 15000	8650	11000	6400			8900	5250	8750
-60			* 31750	* 31750	* 43550	27950	* 32500	18650	23700	13800			19600	11600	350
-3000			* 22150	* 22150	* 18650	13100	* 14200	8700	* 11000	6450			* 10050	6000	7960
-120			* 50150	* 50150	* 40350	28200	* 30650	18700	* 23550	13950			* 22150	13300	320
-4500			* 20950	* 20950	* 15800	13400	* 11950	8900					* 10100	7650	6750
-180			* 45150	* 45150	* 33950	28850	* 25450	19200					* 22200	17100	270

Illustration 167 g06281462

336 LN: 7560 kg (16667 lb) counterweight, 6.5 m (21 ft 4 inch) reach boom, 3.2 m (10 ft 6 inch) stick, 600 mm (24 inch) heavy-duty TG track shoes heavy lift ON.

(mm) (inch)	1500 60		3000 120		4500 180		6000 240		7500 300		9000 360				(mm) (inch)
7500									* 7900	7600			* 6700	* 6700	7700
300													* 14850	* 14850	300
6000									* 8000	7500			* 6500	6000	8580
240									* 17450	16150			* 14350	13350	340
4500					* 12200	* 12200	* 9800	* 9800	* 8600	7300	* 7700	5450	* 6550	5350	9130
180							* 21200	* 21200	* 18650	15700			* 14450	11800	360
3000					* 15450	14400	* 11350	9650	* 9350	7000	* 8300	5350	* 6800	5000	9410
120					* 33150	31150	* 24500	20750	* 20300	15100	* 18050	11450	* 15000	10950	370
1500					* 17750	13500	* 12700	9150	* 10100	6750	* 8600	5200	* 7300	4850	9440
60					* 38300	29100	* 27400	19700	* 21900	14500	18700	11200	* 16050	10650	380
0					* 18500	13100	* 13450	8800	* 10600	6550	8600	5100	* 8100	4950	9220
0					* 40100	28200	* 29150	19000	* 22950	14050	18450	10950	* 17850	10850	370
-1500			* 13250	* 13250	* 18150	13000	* 13550	8650	* 10650	6450			* 8800	5250	8750
-60			* 29950	* 29950	* 39300	28000	* 29300	18700	* 23000	13850			* 19400	11600	350
-3000			* 20900	* 20900	* 16800	13150	* 12800	8700	* 9900	6450			* 9050	6000	7960
-120			* 47350	* 47350	* 36400	28250	* 27600	18750	* 21200	13950			* 19900	13300	320
-4500			* 18850	* 18850	* 14200	13400	* 10750	8900					* 9050	7650	6750
-180			* 40600	* 40600	* 30500	28900	* 22850	19250					* 19900	17150	270

Illustration 168 g06281457

336 LN: 7560 kg (16667 lb) counterweight, 6.5 m (21 ft 4 inch) reach boom, 3.2 m (10 ft 6 inch) stick, 600 mm (24 inch) DG track shoes.

(mm) (inch)	1500 60		3000 120		4500 180		6000 240		7500 300		9000 360				(mm) (inch)
7500									* 8700	7600			* 7350	7250	7700
300													* 16250	* 16250	300
6000									* 8850	7500			* 7150	6000	8580
240									* 19350	16150			* 15700	13350	340
4500					* 13450	* 13450	* 10850	10200	* 9500	7300	* 8450	5450	* 7200	5350	9130
180							* 23450	22000	* 20650	15700			* 15800	11800	360
3000					* 17050	14400	* 12550	9650	* 10400	7000	8850	5350	* 7450	5000	9410
120					* 36650	31150	* 27100	20750	* 22550	15100	19000	11450	* 16400	10950	370
1500					* 19650	13500	* 14050	9150	* 11200	6750	8700	5200	* 8000	4850	9440
60					* 42400	29100	* 30350	19700	* 24300	14500	18700	11200	* 17600	10650	380
0					* 20500	13100	* 14900	8800	11150	6550	8600	5100	8300	4950	9220
0					* 44400	28200	* 32300	19000	24000	14050	18450	10950	18250	10850	370
-1500			* 14050	* 14050	* 20100	13000	* 15000	8650	11050	6450			8900	5250	8750
-60			* 31750	* 31750	* 43550	28000	* 32500	18700	23750	13850			19650	11600	350
-3000			* 22150	* 22150	* 18650	13150	* 14200	8700	* 11000	6450			* 10050	6000	7960
-120			* 50150	* 50150	* 40350	28250	* 30650	18750	* 23550	13950			* 22150	13300	320
-4500			* 20950	* 20950	* 15800	13400	* 11950	8900					* 10100	7650	6750
-180			* 45150	* 45150	* 33950	28900	* 25450	19250					* 22200	17150	270

Illustration 169 g06281458

336 LN: 7560 kg (16667 lb) counterweight, 6.5 m (21 ft 4 inch) reach boom, 3.2 m (10 ft 6 inch) stick, 600 mm (24 inch) DG track shoes heavy lift ON.

6.5 m (21 ft 4 inch) Extreme Service Reach Boom

3.2 m (10 ft 6 inch) Extreme Service Stick

(mm) (inch)	1500 60		3000 120		4500 180		6000 240		7500 300		9000 360				(mm) (inch)
7500									* 7750	7450			* 6650	* 6650	7700
300													* 14700	* 14700	300
6000									* 7850	7350			* 6450	5850	8580
240									* 17150	15850			* 14250	13000	340
4500					* 12050	* 12050	* 9650	* 9650	* 8400	7150	* 7650	5300	* 6500	5150	9130
180							* 20900	* 20900	* 18300	15350			* 14300	11450	360
3000					* 15200	14150	* 11150	9400	* 9200	6850	* 8100	5150	* 6750	4800	9410
120					* 32700	30550	* 24100	20300	* 19950	14700	* 17700	11100	* 14850	10600	370
1500					* 17500	13150	* 12450	8900	* 9950	6550	* 8450	5000	* 7250	4700	9440
60					* 37700	28350	* 26950	19150	* 21500	14050	18250	10800	* 15950	10300	380
0					* 18200	12750	* 13200	8550	* 10400	6300	8350	4900	* 8050	4750	9220
0					* 39450	27400	* 28600	18400	* 22550	13600	18000	10550	* 17750	10450	370
-1500			* 13200	* 13200	* 17850	12650	* 13300	8400	* 10400	6200			* 8600	5100	8750
-60			* 29850	* 29850	* 38650	27200	* 28750	18100	* 22550	13400			* 18950	11200	350
-3000			* 20850	* 20850	* 16500	12750	* 12550	8450	* 9700	6250			* 8850	5800	7960
-120			* 47250	* 47250	* 35700	27450	* 27100	18150	* 20750	13500			* 19450	12850	320
-4500			* 18450	* 18450	* 13900	13050	* 10500	8650					* 8850	7450	6750
-180			* 39750	* 39750	* 29900	28150	* 22350	18700					* 19450	16650	270

Illustration 170 g06281475

336 LN: 7560 kg (16667 lb) counterweight, 6.5 m (21 ft 4 inch) extreme service reach boom, 3.2 m (10 ft 6 inch) extreme service stick, 700 mm (28 inch) TG track shoes.

(mm) (inch)	1500 60		3000 120		4500 180		6000 240		7500 300		9000 360				(mm) (inch)
7500									* 8600	7450			* 7300	7100	7700
300													* 16100	15900	300
6000									* 8700	7350			* 7100	5850	8580
240									* 19050	15850			* 15600	13000	340
4500					* 13300	* 13300	* 10700	10000	* 9350	7150	* 8400	5300	* 7150	5150	9130
180							* 23100	21600	* 20350	15350			* 15700	11450	360
3000					* 16850	14150	* 12350	9400	* 10200	6850	8650	5150	* 7400	4800	9410
120					* 36150	30550	* 26700	20300	* 22150	14700	18600	11100	* 16300	10600	370
1500					* 19350	13150	* 13850	8900	* 11050	6550	8500	5000	7900	4700	9440
60					* 41750	28350	* 29900	19150	* 23900	14050	18250	10800	17400	10300	380
0					* 20200	12750	* 14700	8550	10900	6300	8350	4900	8100	4750	9220
0					* 43700	27400	* 31750	18400	23450	13600	18000	10550	17800	10450	370
-1500			* 14000	* 14000	* 19800	12650	* 14750	8400	10800	6200			8700	5100	8750
-60			* 31650	* 31650	* 42900	27200	* 31950	18100	23200	13400			19150	11200	350
-3000			* 22100	* 22100	* 18350	12750	* 13950	8450	* 10800	6250			* 9850	5800	7960
-120			* 50050	* 50050	* 39700	27450	* 30150	18150	* 23100	13500			* 21700	12850	320
-4500			* 20600	* 20600	* 15500	13050	* 11750	8650					* 9900	7450	6750
-180			* 44300	* 44300	* 33300	28150	* 24950	18700					* 21750	16650	270

Illustration 171 g06281477

336 LN: 7560 kg (16667 lb) counterweight, 6.5 m (21 ft 4 inch) extreme service reach boom, 3.2 m (10 ft 6 inch) extreme service stick, 700 mm (28 inch) TG track shoes heavy lift ON.

(mm) (inch)	1500 60		3000 120		4500 180		6000 240		7500 300		9000 360				(mm) (inch)
7500									* 7750	7400			* 6650	* 6650	7700
300													* 14700	* 14700	300
6000									* 7850	7300			* 6450	5800	8580
240									* 17150	15700			* 14250	12900	340
4500					* 12050	* 12050	* 9650	* 9650	* 8400	7100	* 7650	5250	* 6500	5150	9130
180							* 20900	* 20900	* 18300	15200			* 14300	11350	360
3000					* 15200	14050	* 11150	9350	* 9200	6750	* 8100	5100	* 6750	4750	9410
120					* 32700	30300	* 24100	20150	* 19950	14550	* 17700	11000	* 14850	10500	370
1500					* 17500	13050	* 12450	8800	* 9950	6500	8400	5000	* 7250	4650	9440
60					* 37700	28150	* 26950	19000	* 21500	13950	18100	10700	* 15950	10200	380
0					* 18200	12600	* 13200	8450	* 10400	6250	8300	4850	8000	4700	9220
0					* 39450	27150	* 28600	18250	* 22550	13500	17850	10450	17650	10350	370
-1500			* 13200	* 13200	* 17850	12550	* 13300	8300	* 10400	6150			8600	5050	8750
-60			* 29850	* 29850	* 38650	26950	* 28750	17950	* 22550	13250			* 18950	11100	350
-3000			* 20850	* 20850	* 16500	12650	* 12550	8350	* 9700	6200			* 8850	5750	7960
-120			* 47250	* 47250	* 35700	27200	* 27100	18000	* 20750	13350			* 19450	12750	320
-4500			* 18450	* 18450	* 13900	12950	* 10500	8600					* 8850	7350	6750
-180			* 39750	* 39750	* 29900	27900	* 22350	18550					* 19450	16500	270

Illustration 172 g06281471

336 LN: 7560 kg (16667 lb) counterweight, 6.5 m (21 ft 4 inch) extreme service reach boom, 3.2 m (10 ft 6 inch) extreme service stick, 600 mm (24 inch) TG track shoes.

(mm) (inch)	1500 60		3000 120		4500 180		6000 240		7500 300		9000 360				(mm) (inch)
7500									* 8600	7400			* 7300	7050	7700
300													* 16100	15800	300
6000									* 8700	7300			* 7100	5800	8580
240									* 19050	15700			* 15600	12900	340
4500					* 13300	* 13300	* 10700	9950	* 9350	7100	* 8400	5250	* 7150	5150	9130
180							* 23100	21450	* 20350	15200			* 15700	11350	360
3000					* 16850	14050	* 12350	9350	* 10200	6750	8550	5100	* 7400	4750	9410
120					* 36150	30300	* 26700	20150	* 22150	14550	18400	11000	* 16300	10500	370
1500					* 19350	13050	* 13850	8800	* 11050	6500	8400	5000	7850	4650	9440
60					* 41750	28150	* 29900	19000	23750	13950	18100	10700	17250	10200	380
0					* 20200	12600	* 14700	8450	10800	6250	8300	4850	8000	4700	9220
0					* 43700	27150	* 31750	18250	23250	13500	17850	10450	17650	10350	370
-1500			* 14000	* 14000	* 19800	12550	* 14750	8300	10700	6150			8600	5050	8750
-60			* 31650	* 31650	* 42900	26950	* 31950	17950	23000	13250			19000	11100	350
-3000			* 22100	* 22100	* 18350	12650	* 13950	8350	10750	6200			* 9850	5750	7960
-120			* 50050	* 50050	* 39700	27200	* 30150	18000	* 23100	13350			* 21700	12750	320
-4500			* 20600	* 20600	* 15500	12950	* 11750	8600					* 9900	7350	6750
-180			* 44300	* 44300	* 33300	27900	* 24950	18550					* 21750	16500	270

Illustration 173 g06281473

336 LN: 7560 kg (16667 lb) counterweight, 6.5 m (21 ft 4 inch) extreme service reach boom, 3.2 m (10 ft 6 inch) extreme service stick, 600 mm (24 inch) TG track shoes heavy lift ON.

(mm) (inch)	1500 60		3000 120		4500 180		6000 240		7500 300		9000 360				(mm) (inch)
7500									* 7750	7500			* 6650	* 6650	7700
300													* 14700	* 14700	300
6000									* 7850	7400			* 6450	5900	8580
240									* 17150	15950			* 14250	13100	340
4500					* 12050	* 12050	* 9650	* 9650	* 8400	7200	* 7650	5350	* 6500	5200	9130
180							* 20900	* 20900	* 18300	15450			* 14300	11500	360
3000					* 15200	14250	* 11150	9500	* 9200	6850	* 8100	5200	* 6750	4850	9410
120					* 32700	30750	* 24100	20450	* 19950	14800	* 17700	11150	* 14850	10650	370
1500					* 17500	13250	* 12450	8950	* 9950	6600	* 8450	5050	* 7250	4700	9440
60					* 37700	28550	* 26950	19300	* 21500	14150	* 18350	10850	* 15950	10350	380
0					* 18200	12800	* 13200	8600	* 10400	6350	8450	4950	* 8050	4800	9220
0					* 39450	27600	* 28600	18550	* 22550	13700	18150	10650	* 17750	10550	370
-1500			* 13200	* 13200	* 17850	12750	* 13300	8450	* 10400	6250			* 8600	5100	8750
-60			* 29850	* 29850	* 38650	27400	* 28750	18200	* 22550	13500			* 18950	11300	350
-3000			* 20850	* 20850	* 16500	12850	* 12550	8500	* 9700	6300			* 8850	5850	7960
-120			* 47250	* 47250	* 35700	27650	* 27100	18300	* 20750	13600			* 19450	12950	320
-4500			* 18450	* 18450	* 13900	13150	* 10500	8700					* 8850	7500	6750
-180			* 39750	* 39750	* 29900	28350	* 22350	18850					* 19450	16750	270

Illustration 174 g06281481

336 LN: 7560 kg (16667 lb) counterweight, 6.5 m (21 ft 4 inch) extreme service reach boom, 3.2 m (10 ft 6 inch) extreme service stick, 600 mm (24 inch) heavy-duty TG track shoes.

(mm) (inch)	1500 60		3000 120		4500 180		6000 240		7500 300		9000 360				(mm) (inch)
7500									* 8600	7500			* 7300	7150	7700
300													* 16100	16000	300
6000									* 8700	7400			* 7100	5900	8580
240									* 19050	15950			* 15600	13100	340
4500					* 13300	* 13300	* 10700	10100	* 9350	7200	* 8400	5350	* 7150	5200	9130
180							* 23100	21750	* 20350	15450			* 15700	11500	360
3000					* 16850	14250	* 12350	9500	* 10200	6850	8700	5200	* 7400	4850	9410
120					* 36150	30750	* 26700	20450	* 22150	14800	18750	11150	* 16300	10650	370
1500					* 19350	13250	* 13850	8950	* 11050	6600	8550	5050	* 7950	4700	9440
60					* 41750	28550	* 29900	19300	* 23900	14150	18400	10850	* 17450	10350	380
0					* 20200	12800	* 14700	8600	11000	6350	8450	4950	8150	4800	9220
0					* 43700	27600	* 31750	18550	23650	13700	18150	10650	17950	10550	370
-1500			* 14000	* 14000	* 19800	12750	* 14750	8450	10850	6250			8750	5100	8750
-60			* 31650	* 31650	* 42900	27400	* 31950	18200	23400	13500			19300	11300	350
-3000			* 22100	* 22100	* 18350	12850	* 13950	8500	* 10800	6300			* 9850	5850	7960
-120			* 50050	* 50050	* 39700	27650	* 30150	18300	* 23100	13600			* 21700	12950	320
-4500			* 20600	* 20600	* 15500	13150	* 11750	8700					* 9900	7500	6750
-180			* 44300	* 44300	* 33300	28350	* 24950	18850					* 21750	16750	270

Illustration 175 g06281484

336 LN: 7560 kg (16667 lb) counterweight, 6.5 m (21 ft 4 inch) extreme service reach boom, 3.2 m (10 ft 6 inch) extreme service stick, 600 mm (24 inch) heavy-duty TG track shoes heavy lift ON.

(mm) (inch)	1500 60		3000 120		4500 180		6000 240		7500 300		9000 360				
kg / Lb															(mm) (inch)
7500									* 7750	7500			* 6650	* 6650	7700
300													* 14700	* 14700	300
6000									* 7850	7450			* 6450	5900	8580
240									* 17150	15950			* 14250	13100	340
4500					* 12050	* 12050	* 9650	* 9650	* 8400	7200	* 7650	5350	* 6500	5200	9130
180							* 20900	* 20900	* 18300	15500			* 14300	11550	360
3000					* 15200	14250	* 11150	9500	* 9200	6900	* 8100	5200	* 6750	4850	9410
120					* 32700	30800	* 24100	20500	* 19950	14850	* 17700	11200	* 14850	10700	370
1500					* 17500	13300	* 12450	8950	* 9950	6600	* 8450	5050	* 7250	4750	9440
60					* 37700	28650	* 26950	19350	* 21500	14200	* 18350	10900	* 15950	10400	380
0					* 18200	12850	* 13200	8650	* 10400	6400	8450	4950	* 8050	4800	9220
0					* 39450	27650	* 28600	18600	* 22550	13750	18200	10700	* 17750	10550	370
-1500			* 13200	* 13200	* 17850	12750	* 13300	8500	* 10400	6300			* 8600	5150	8750
-60			* 29850	* 29850	* 38650	27450	* 28750	18250	* 22550	13500			* 18950	11300	350
-3000			* 20850	* 20850	* 16500	12900	* 12550	8500	* 9700	6300			* 8850	5850	7960
-120			* 47250	* 47250	* 35700	27700	* 27100	18350	* 20750	13650			* 19450	13000	320
-4500			* 18450	* 18450	* 13900	13200	* 10500	8750					* 8850	7500	6750
-180			* 39750	* 39750	* 29900	28400	* 22350	18850					* 19450	16800	270

Illustration 176 g06281478

336 LN: 7560 kg (16667 lb) counterweight, 6.5 m (21 ft 4 inch) extreme service reach boom, 3.2 m (10 ft 6 inch) extreme service stick, 600 mm (24 inch) DG track shoes.

(mm) (inch)	1500 60		3000 120		4500 180		6000 240		7500 300		9000 360				
kg / Lb															(mm) (inch)
7500									* 8600	7500			* 7300	7150	7700
300													* 16100	16050	300
6000									* 8700	7450			* 7100	5900	8580
240									* 19050	15950			* 15600	13100	340
4500					* 13300	* 13300	* 10700	10100	* 9350	7200	* 8400	5350	* 7150	5200	9130
180							* 23100	21800	* 20350	15500			* 15700	11550	360
3000					* 16850	14250	* 12350	9500	* 10200	6900	8750	5200	* 7400	4850	9410
120					* 36150	30800	* 26700	20500	* 22150	14850	18750	11200	* 16300	10700	370
1500					* 19350	13300	* 13850	8950	* 11050	6600	8600	5050	* 7950	4750	9440
60					* 41750	28650	* 29900	19350	* 23900	14200	18450	10900	* 17450	10400	380
0					* 20200	12850	* 14700	8650	11000	6400	8450	4950	8150	4800	9220
0					* 43700	27650	* 31750	18600	23700	13750	18200	10700	18000	10550	370
-1500			* 14000	* 14000	* 19800	12750	* 14750	8500	10900	6300			8800	5150	8750
-60			* 31650	* 31650	* 42900	27450	* 31950	18250	23450	13500			19350	11300	350
-3000			* 22100	* 22100	* 18350	12900	* 13950	8500	* 10800	6300			* 9850	5850	7960
-120			* 50050	* 50050	* 39700	27700	* 30150	18350	* 23100	13650			* 21700	13000	320
-4500			* 20600	* 20600	* 15500	13200	* 11750	8750					* 9900	7500	6750
-180			* 44300	* 44300	* 33300	28400	* 24950	18850					* 21750	16800	270

Illustration 177 g06281480

336 LN: 7560 kg (16667 lb) counterweight, 6.5 m (21 ft 4 inch) extreme service reach boom, 3.2 m (10 ft 6 inch) extreme service stick, 600 mm (24 inch) DG track shoes heavy lift ON.

6.5 m (21 ft 4 inch) Reach Boom

3.9 m (12 ft 10 inch) Stick

(mm) (inch)	1500 60		3000 120		4500 180		6000 240		7500 300		9000 360				(mm) (inch)
9000													* 5650	* 5650	7350
360													* 12500	* 12500	290
7500									* 6900	* 6900			* 5250	* 5250	8540
300									* 15250	* 15250			* 11550	* 11550	340
6000									* 7200	* 7200	* 6800	5600	* 5100	* 5100	9340
240									* 15700	* 15700	* 13100	11900	* 11150	* 11150	370
4500							* 8800	* 8800	* 7850	7350	* 7300	5450	* 5100	4700	9840
180							* 19050	* 19050	* 17050	15750	* 16000	11750	* 11200	10350	390
3000					* 13800	* 13800	* 10400	9700	* 8750	7000	* 7750	5300	* 5250	4400	10100
120					* 29650	* 29650	* 22500	20950	* 18950	15050	* 16900	11400	* 11500	9650	400
1500					* 16600	13600	* 11950	9150	* 9600	6700	* 8250	5150	* 5550	4300	10130
60					* 35850	29350	* 25850	19700	* 20800	14400	* 17850	11000	* 12200	9400	400
0			* 7700	* 7700	* 18100	13000	* 13050	8700	* 10250	6450	8450	5000	* 6050	4350	9930
0			* 17550	* 17550	* 39100	27950	* 28200	18800	* 22250	13850	18150	10700	* 13350	9550	390
-1500	* 8100	* 8100	* 12150	* 12150	* 18300	12750	* 13450	8500	* 10550	6300	8350	4900	* 6900	4600	9490
-60	* 18000	* 18000	* 27400	* 27400	* 39650	27450	* 29100	18300	* 22800	13500	17950	10550	* 15250	10100	380
-3000	* 12850	* 12850	* 17700	* 17700	* 17500	12750	* 13100	8450	* 10250	6250			* 8250	5100	8770
-120	* 28750	* 28750	* 40100	* 40100	* 37850	27450	* 28350	18200	* 22050	13450			* 18200	11300	350
-4500	* 18450	* 18450	* 21600	* 21600	* 15550	12950	* 11800	8550	* 8800	6400			* 8400	6200	7690
-180	* 41500	* 41500	* 46600	* 46600	* 33550	27950	* 25300	18500	* 18550	13800			* 18550	13800	300
-6000					* 11800	* 11800	* 8350	* 8350					* 8200	* 8200	6060
-240					* 24850	* 24850							* 17900	* 17900	240

Illustration 178 g06281727

336 LN: 7560 kg (16667 lb) counterweight, 6.5 m (21 ft 4 inch) reach boom, 3.9 m (12 ft 10 inch) stick, 700 mm (28 inch) TG track shoes.

(mm) (inch)	1500 60		3000 120		4500 180		6000 240		7500 300		9000 360				(mm) (inch)
9000													* 6200	* 6200	7350
360													* 13750	* 13750	290
7500									* 7650	* 7650			* 5750	* 5750	8540
300									* 16850	16500			* 12700	* 12700	340
6000									* 7950	7600	* 7450	5600	* 5600	5200	9340
240									* 17400	16300	* 14350	11900	* 12300	11550	370
4500							* 9750	* 9750	* 8700	7350	* 8150	5450	* 5600	4700	9840
180							* 21050	* 21050	* 18950	15750	* 17800	11750	* 12300	10350	390
3000					* 15250	14750	* 11550	9700	* 9700	7000	* 8650	5300	* 5750	4400	10100
120					* 32800	31850	* 24950	20950	* 21000	15050	* 18800	11400	* 12650	9650	400
1500					* 18400	13600	* 13250	9150	* 10650	6700	8600	5150	* 6100	4300	10130
60					* 39650	29350	* 28650	19700	* 23100	14400	18450	11000	* 13400	9400	400
0			* 8200	* 8200	* 20050	13000	* 14450	8700	11000	6450	8450	5000	* 6650	4350	9930
0			* 18650	* 18650	* 43350	27950	* 31250	18800	23700	13850	18150	10700	* 14650	9550	390
-1500	* 8600	* 8600	* 12850	* 12850	* 20300	12750	* 14900	8500	10850	6300	8350	4900	* 7550	4600	9490
-60	* 19150	* 19150	* 29050	* 29050	* 43950	27450	* 32300	18300	23300	13500	17950	10550	* 16700	10100	380
-3000	* 13600	* 13600	* 18800	* 18800	* 19400	12750	* 14550	8450	10800	6250			8700	5100	8770
-120	* 30500	* 30500	* 42450	* 42450	* 42000	27450	* 31450	18200	23250	13450			19250	11300	350
-4500	* 19550	* 19550	* 24000	* 24000	* 17300	12950	* 13100	8550	* 9850	6400			* 9400	6200	7690
-180	* 43950	* 43950	* 51750	* 51750	* 37300	27950	* 28150	18500	* 20700	13800			* 20700	13800	300
-6000					* 13200	* 13200	* 9350	8950					* 9150	8850	6060
-240					* 27750	* 27750							* 20050	* 20050	240

Illustration 179 g06281728

336 LN: 7560 kg (16667 lb) counterweight, 6.5 m (21 ft 4 inch) reach boom, 3.9 m (12 ft 10 inch) stick, 700 mm (28 inch) TG track shoes heavy lift ON.

(mm) (inch)	1500 60		3000 120		4500 180		6000 240		7500 300		9000 360				(mm) (inch)
9000													* 5650	* 5650	7350
360													* 12500	* 12500	290
7500									* 6900	* 6900			* 5250	* 5250	8540
300									* 15250	* 15250			* 11550	* 11550	340
6000									* 7200	* 7200	* 6800	5550	* 5100	* 5100	9340
240									* 15700	* 15700	* 13100	11800	* 11150	* 11150	370
4500							* 8800	* 8800	* 7850	7250	* 7300	5450	* 5100	4650	9840
180							* 19050	* 19050	* 17050	15650	* 16000	11650	* 11200	10250	390
3000					* 13800	* 13800	* 10400	9650	* 8750	6950	* 7750	5250	* 5250	4350	10100
120					* 29650	* 29650	* 22500	20750	* 18950	14950	* 16900	11300	* 11500	9600	400
1500					* 16600	13500	* 11950	9050	* 9600	6650	* 8250	5100	* 5550	4250	10130
60					* 35850	29150	* 25850	19550	* 20800	14250	* 17850	10900	* 12200	9350	400
0			* 7700	* 7700	* 18100	12900	* 13050	8650	* 10250	6350	8350	4950	* 6050	4300	9930
0			* 17550	* 17550	* 39100	27750	* 28200	18650	* 22250	13700	17950	10600	* 13350	9450	390
-1500	* 8100	* 8100	* 12150	* 12150	* 18300	12650	* 13450	8400	* 10550	6200	8250	4850	* 6900	4550	9490
-60	* 18000	* 18000	* 27400	* 27400	* 39650	27200	* 29100	18150	* 22800	13400	17800	10450	* 15250	10000	380
-3000	* 12850	* 12850	* 17700	* 17700	* 17500	12650	* 13100	8400	* 10250	6200			* 8250	5050	8770
-120	* 28750	* 28750	* 40100	* 40100	* 37850	27250	* 28350	18050	* 22050	13350			* 18200	11200	350
-4500	* 18450	* 18450	* 21600	* 21600	* 15550	12850	* 11800	8500	* 8800	6350			* 8400	6150	7690
-180	* 41500	* 41500	* 46600	* 46600	* 33550	27700	* 25300	18300	* 18550	13700			* 18550	13700	300
-6000					* 11800	* 11800	* 8350	* 8350					* 8200	* 8200	6060
-240					* 24850	* 24850							* 17900	* 17900	240

Illustration 180 g06282463

336 LN: 7560 kg (16667 lb) counterweight, 6.5 m (21 ft 4 inch) reach boom, 3.9 m (12 ft 10 inch) stick, 600 mm (24 inch) TG track shoes.

(mm) (inch)	1500 60		3000 120		4500 180		6000 240		7500 300		9000 360				(mm) (inch)
9000													* 6200	* 6200	7350
360													* 13750	* 13750	290
7500									* 7650	* 7650			* 5750	* 5750	8540
300									* 16850	16400			* 12700	* 12700	340
6000									* 7950	7550	* 7450	5550	* 5600	5150	9340
240									* 17400	16150	* 14350	11800	* 12300	11450	370
4500							* 9750	* 9750	* 8700	7250	* 8150	5450	* 5600	4650	9840
180							* 21050	* 21050	* 18950	15650	* 17800	11650	* 12300	10250	390
3000					* 15250	14650	* 11550	9650	* 9700	6950	* 8650	5250	* 5750	4350	10100
120					* 32800	31600	* 24950	20750	* 21000	14950	18700	11300	* 12650	9600	400
1500					* 18400	13500	* 13250	9050	* 10650	6650	8500	5100	* 6100	4250	10130
60					* 39650	29150	* 28650	19550	* 23100	14250	18300	10900	* 13400	9350	400
0			* 8200	* 8200	* 20050	12900	* 14450	8650	10900	6350	8350	4950	* 6650	4300	9930
0			* 18650	* 18650	* 43350	27750	* 31250	18650	23450	13700	17950	10600	* 14650	9450	390
-1500	* 8600	* 8600	* 12850	* 12850	* 20300	12650	* 14900	8400	10750	6200	8250	4850	* 7550	4550	9490
-60	* 19150	* 19150	* 29050	* 29050	* 43950	27200	* 32300	18150	23100	13400	17800	10450	* 16700	10000	380
-3000	* 13600	* 13600	* 18800	* 18800	* 19400	12650	* 14550	8400	10700	6200			8600	5050	8770
-120	* 30500	* 30500	* 42450	* 42450	* 42000	27250	* 31450	18050	23050	13350			19050	11200	350
-4500	* 19550	* 19550	* 24000	* 24000	* 17300	12850	* 13100	8500	* 9850	6350			* 9400	6150	7690
-180	* 43950	* 43950	* 51750	* 51750	* 37300	27700	* 28150	18300	* 20700	13700			* 20700	13700	300
-6000					* 13200	* 13200	* 9350	8900					* 9150	8800	6060
-240					* 27750	* 27750							* 20050	20000	240

Illustration 181 g06281726

336 LN: 7560 kg (16667 lb) counterweight, 6.5 m (21 ft 4 inch) reach boom, 3.9 m (12 ft 10 inch) stick, 600 mm (24 inch) TG track shoes heavy lift ON.

(mm) (inch)	1500 60		3000 120		4500 180		6000 240		7500 300		9000 360				(mm) (inch)
9000													* 5650	* 5650	7350
360													* 12500	* 12500	290
7500									* 6900	* 6900			* 5250	* 5250	8540
300									* 15250	* 15250			* 11550	* 11550	340
6000									* 7200	* 7200	* 6800	5600	* 5100	* 5100	9340
240									* 15700	* 15700	* 13100	12000	* 11150	* 11150	370
4500							* 8800	* 8800	* 7850	7350	* 7300	5500	* 5100	4700	9840
180							* 19050	* 19050	* 17050	15850	* 16000	11800	* 11200	10400	390
3000					* 13800	* 13800	* 10400	9750	* 8750	7050	* 7750	5350	* 5250	4450	10100
120					* 29650	* 29650	* 22500	21050	* 18950	15200	* 16900	11450	* 11500	9750	400
1500					* 16600	13700	* 11950	9200	* 9600	6750	* 8250	5150	* 5550	4300	10130
60					* 35850	29550	* 25850	19850	* 20800	14500	* 17850	11100	* 12200	9500	400
0			* 7700	* 7700	* 18100	13100	* 13050	8800	* 10250	6500	8500	5000	* 6050	4350	9930
0			* 17550	* 17550	* 39100	28150	* 28200	18900	* 22250	13950	18300	10800	* 13350	9600	390
-1500	* 8100	* 8100	* 12150	* 12150	* 18300	12850	* 13450	8550	* 10550	6300	8400	4950	* 6900	4600	9490
-60	* 18000	* 18000	* 27400	* 27400	* 39650	27650	* 29100	18450	* 22800	13600	18100	10650	* 15250	10150	380
-3000	* 12850	* 12850	* 17700	* 17700	* 17500	12850	* 13100	8500	* 10250	6300			* 8250	5150	8770
-120	* 28750	* 28750	* 40100	* 40100	* 37850	27650	* 28350	18350	* 22050	13550			* 18200	11400	350
-4500	* 18450	* 18450	* 21600	* 21600	* 15550	13050	* 11800	8650	* 8800	6450			* 8400	6250	7690
-180	* 41500	* 41500	* 46600	* 46600	* 33550	28100	* 25300	18600	* 18550	13900			* 18550	13900	300
-6000					* 11800	* 11800	* 8350	* 8350					* 8200	* 8200	6060
-240					* 24850	* 24850							* 17900	* 17900	240

Illustration 182 g06281733

336 LN: 7560 kg (16667 lb) counterweight, 6.5 m (21 ft 4 inch) reach boom, 3.9 m (12 ft 10 inch) stick, 600 mm (24 inch) heavy-duty TG track shoes.

(mm) (inch)	1500 60		3000 120		4500 180		6000 240		7500 300		9000 360				(mm) (inch)
9000													* 6200	* 6200	7350
360													* 13750	* 13750	290
7500									* 7650	* 7650			* 5750	* 5750	8540
300									* 16850	16600			* 12700	* 12700	340
6000									* 7950	7650	* 7450	5600	* 5600	5250	9340
240									* 17400	16400	* 14350	12000	* 12300	11650	370
4500							* 9750	* 9750	* 8700	7350	* 8150	5500	* 5600	4700	9840
180							* 21050	* 21050	* 18950	15850	* 17800	11800	* 12300	10400	390
3000					* 15250	14850	* 11550	9750	* 9700	7050	* 8650	5350	* 5750	4450	10100
120					* 32800	32000	* 24950	21050	* 21000	15200	* 18800	11450	* 12650	9750	400
1500					* 18400	13700	* 13250	9200	* 10650	6750	8650	5150	* 6100	4300	10130
60					* 39650	29550	* 28650	19850	* 23100	14500	18600	11100	* 13400	9500	400
0			* 8200	* 8200	* 20050	13100	* 14450	8800	11100	6500	8500	5000	* 6650	4350	9930
0			* 18650	* 18650	* 43350	28150	* 31250	18900	23850	13950	18300	10800	* 14650	9600	390
-1500	* 8600	* 8600	* 12850	* 12850	* 20300	12850	* 14900	8550	10900	6300	8400	4950	* 7550	4600	9490
-60	* 19150	* 19150	* 29050	* 29050	* 43950	27650	* 32300	18450	23500	13600	18100	10650	* 16700	10150	380
-3000	* 13600	* 13600	* 18800	* 18800	* 19400	12850	* 14550	8500	10900	6300			8750	5150	8770
-120	* 30500	* 30500	* 42450	* 42450	* 42000	27650	* 31450	18350	23450	13550			19400	11400	350
-4500	* 19550	* 19550	* 24000	* 24000	* 17300	13050	* 13100	8650	* 9850	6450			* 9400	6250	7690
-180	* 43950	* 43950	* 51750	* 51750	* 37300	28100	* 28150	18600	* 20700	13900			* 20700	13900	300
-6000					* 13200	* 13200	* 9350	9050					* 9150	8900	6060
-240					* 27750	* 27750							* 20050	* 20050	240

Illustration 183 g06281734

336 LN: 7560 kg (16667 lb) counterweight, 6.5 m (21 ft 4 inch) reach boom, 3.9 m (12 ft 10 inch) stick, 600 mm (24 inch) heavy-duty TG track shoes heavy lift ON.

(mm) (inch)	1500 60		3000 120		4500 180		6000 240		7500 300		9000 360				(mm) (inch)
9000													* 5650	* 5650	7350
360													* 12500	* 12500	290
7500									* 6900	* 6900			* 5250	* 5250	8540
300									* 15250	* 15250			* 11550	* 11550	340
6000									* 7200	* 7200	* 6800	5650	* 5100	* 5100	9340
240									* 15700	* 15700	* 13100	12050	* 11150	* 11150	370
4500							* 8800	* 8800	* 7850	7400	* 7300	5500	* 5100	4750	9840
180							* 19050	* 19050	* 17050	15900	* 16000	11850	* 11200	10450	390
3000					* 13800	* 13800	* 10400	9800	* 8750	7050	* 7750	5350	* 5250	4450	10100
120					* 29650	* 29650	* 22500	21100	* 18950	15200	* 16900	11500	* 11500	9750	400
1500					* 16600	13750	* 11950	9200	* 9600	6750	* 8250	5200	* 5550	4350	10130
60					* 35850	29650	* 25850	19850	* 20800	14550	* 17850	11150	* 12200	9500	400
0			* 7700	* 7700	* 18100	13100	* 13050	8800	* 10250	6500	8500	5050	* 6050	4400	9930
0			* 17550	* 17550	* 39100	28250	* 28200	18950	* 22250	14000	18300	10800	* 13350	9650	390
-1500	* 8100	* 8100	* 12150	* 12150	* 18300	12900	* 13450	8600	* 10550	6350	8450	4950	* 6900	4650	9490
-60	* 18000	* 18000	* 27400	* 27400	* 39650	27700	* 29100	18500	* 22800	13650	18150	10650	* 15250	10200	380
-3000	* 12850	* 12850	* 17700	* 17700	* 17500	12900	* 13100	8550	* 10250	6300			* 8250	5150	8770
-120	* 28750	* 28750	* 40100	* 40100	* 37850	27700	* 28350	18400	* 22050	13600			* 18200	11400	350
-4500	* 18450	* 18450	* 21600	* 21600	* 15550	13100	* 11800	8650	* 8800	6450			* 8400	6250	7690
-180	* 41500	* 41500	* 46600	* 46600	* 33550	28200	* 25300	18650	* 18550	13950			* 18550	13950	300
-6000					* 11800	* 11800	* 8350	* 8350					* 8200	* 8200	6060
-240					* 24850	* 24850							* 17900	* 17900	240

Illustration 184 g06281729

336 LN: 7560 kg (16667 lb) counterweight, 6.5 m (21 ft 4 inch) reach boom, 3.9 m (12 ft 10 inch) stick, 600 mm (24 inch) DG track shoes.

(mm) (inch)	1500 60		3000 120		4500 180		6000 240		7500 300		9000 360				(mm) (inch)
9000													* 6200	* 6200	7350
360													* 13750	* 13750	290
7500									* 7650	* 7650			* 5750	* 5750	8540
300									* 16850	16650			* 12700	* 12700	340
6000									* 7950	7650	* 7450	5650	* 5600	5250	9340
240									* 17400	16400	* 14350	12050	* 12300	11650	370
4500							* 9750	* 9750	* 8700	7400	* 8150	5500	* 5600	4750	9840
180							* 21050	* 21050	* 18950	15900	* 17800	11850	* 12300	10450	390
3000					* 15250	14850	* 11550	9800	* 9700	7050	* 8650	5350	* 5750	4450	10100
120					* 32800	32100	* 24950	21100	* 21000	15200	* 18800	11500	* 12650	9750	400
1500					* 18400	13750	* 13250	9200	* 10650	6750	8700	5200	* 6100	4350	10130
60					* 39650	29650	* 28650	19850	* 23100	14550	18650	11150	* 13400	9500	400
0			* 8200	* 8200	* 20050	13100	* 14450	8800	11100	6500	8500	5050	* 6650	4400	9930
0			* 18650	* 18650	* 43350	28250	* 31250	18950	23950	14000	18300	10800	* 14650	9650	390
-1500	* 8600	* 8600	* 12850	* 12850	* 20300	12900	* 14900	8600	10950	6350	8450	4950	* 7550	4650	9490
-60	* 19150	* 19150	* 29050	* 29050	* 43950	27700	* 32300	18500	23550	13650	18150	10650	* 16700	10200	380
-3000	* 13600	* 13600	* 18800	* 18800	* 19400	12900	* 14550	8550	10900	6300			8800	5150	8770
-120	* 30500	* 30500	* 42450	* 42450	* 42000	27700	* 31450	18400	23500	13600			19450	11400	350
-4500	* 19550	* 19550	* 24000	* 24000	* 17300	13100	* 13100	8650	* 9850	6450			* 9400	6250	7690
-180	* 43950	* 43950	* 51750	* 51750	* 37300	28200	* 28150	18650	* 20700	13950			* 20700	13950	300
-6000					* 13200	* 13200	* 9350	9050					* 9150	8950	6060
-240					* 27750	* 27750							* 20050	* 20050	240

Illustration 185 g06281730

336 LN: 7560 kg (16667 lb) counterweight, 6.5 m (21 ft 4 inch) reach boom, 3.9 m (12 ft 10 inch) stick, 600 mm (24 inch) DG track shoes heavy lift ON.

6.5 m (21 ft 4 inch) Extreme Service Reach Boom

3.9 m (12 ft 10 inch) Extreme Service Stick

(mm) (inch)	1500 60		3000 120		4500 180		6000 240		7500 300		9000 360				(mm) (inch)
9000													* 5550	* 5550	7350
360													* 12350	* 12350	290
7500									* 6750	* 6750			* 5150	* 5150	8540
300									* 14950	* 14950			* 11400	* 11400	340
6000									* 7050	* 7050	* 6700	5450	* 5000	* 5000	9340
240									* 15400	* 15400	* 12900	11650	* 11000	* 11000	370
4500							* 8650	* 8650	* 7700	7200	* 7150	5350	* 5000	4550	9840
180							* 18700	* 18700	* 16750	15550	* 15650	11500	* 11000	10100	390
3000					* 13600	* 13600	* 10250	9600	* 8550	6900	* 7600	5200	* 5150	4250	10100
120					* 29200	* 29200	* 22100	20650	* 18550	14800	* 16500	11100	* 11350	9400	400
1500					* 16350	13400	* 11750	9000	* 9400	6550	* 8050	5000	* 5500	4150	10130
60					* 35250	28900	* 25350	19350	* 20400	14100	* 17450	10700	* 12050	9100	400
0			* 7650	* 7650	* 17750	12750	* 12800	8550	* 10050	6250	8300	4850	* 6000	4200	9930
0			* 17400	* 17400	* 38450	27400	* 27650	18400	* 21800	13500	17850	10400	* 13200	9200	390
-1500	* 8000	* 8000	* 12050	* 12050	* 17950	12500	* 13200	8300	* 10300	6100	8200	4750	* 6850	4450	9490
-60	* 17850	* 17850	* 27250	* 27250	* 38950	26850	* 28550	17850	* 22350	13150	17650	10250	* 15050	9750	380
-3000	* 12750	* 12750	* 17650	* 17650	* 17150	12500	* 12850	8250	* 10000	6050			* 8050	4950	8770
-120	* 28600	* 28600	* 39900	* 39900	* 37150	26850	* 27750	17750	* 21550	13100			* 17750	10950	350
-4500	* 18400	* 18400	* 21200	* 21200	* 15250	12700	* 11500	8350	* 8600	6200			* 8200	6050	7690
-180	* 41350	* 41350	* 45650	* 45650	* 32850	27350	* 24700	18050	* 18100	13450			* 18050	13450	300
-6000					* 11500	* 11500	* 8100	* 8100					* 7950	* 7950	6060
-240					* 24250	* 24250							* 17400	* 17400	240

Illustration 186 g06281742

336 LN: 7560 kg (16667 lb) counterweight, 6.5 m (21 ft 4 inch) extreme service reach boom, 3.9 m (12 ft 10 inch) extreme service stick, 700 mm (28 inch) TG track shoes.

(mm) (inch)	1500 60		3000 120		4500 180		6000 240		7500 300		9000 360				(mm) (inch)
9000													* 6100	* 6100	7350
360													* 13600	* 13600	290
7500									* 7500	* 7500			* 5650	* 5650	8540
300									* 16550	16350			* 12500	* 12500	340
6000									* 7800	7500	* 7350	5450	* 5500	5100	9340
240									* 17100	16100	* 14200	11650	* 12100	11300	370
4500							* 9600	* 9600	* 8550	7200	* 7950	5350	* 5500	4550	9840
180							* 20750	* 20750	* 18600	15550	* 17400	11500	* 12150	10100	390
3000					* 15050	14600	* 11350	9600	* 9500	6900	* 8450	5200	* 5700	4250	10100
120					* 32300	31550	* 24550	20650	* 20650	14800	* 18400	11100	* 12500	9400	400
1500					* 18100	13400	* 13050	9000	* 10450	6550	8450	5000	* 6050	4150	10130
60					* 39050	28900	* 28200	19350	* 22700	14100	18200	10700	* 13250	9100	400
0			* 8150	* 8150	* 19700	12750	* 14200	8550	10850	6250	8300	4850	* 6600	4200	9930
0			* 18500	* 18500	* 42650	27400	* 30750	18400	23400	13500	17850	10400	* 14500	9200	390
-1500	* 8500	* 8500	* 12800	* 12800	* 19950	12500	* 14650	8300	10700	6100	8200	4750	* 7500	4450	9490
-60	* 19000	* 19000	* 28900	* 28900	* 43200	26850	* 31750	17850	23000	13150	17650	10250	* 16550	9750	380
-3000	* 13550	* 13550	* 18700	* 18700	* 19100	12500	* 14300	8250	10650	6050			8550	4950	8770
-120	* 30300	* 30300	* 42300	* 42300	* 41300	26850	* 30900	17750	22900	13100			18950	10950	350
-4500	* 19500	* 19500	* 23550	* 23550	* 17000	12700	* 12850	8350	* 9600	6200			* 9200	6050	7690
-180	* 43800	* 43800	* 50850	* 50850	* 36600	27350	* 27600	18050	* 20250	13450			* 20200	13450	300
-6000					* 12900	* 12900	* 9100	8800					* 8950	8700	6060
-240					* 27150	* 27150							* 19550	* 19550	240

Illustration 187 g06281760

336 LN: 7560 kg (16667 lb) counterweight, 6.5 m (21 ft 4 inch) extreme service reach boom, 3.9 m (12 ft 10 inch) extreme service stick, 700 mm (28 inch) TG track shoes heavy lift ON.

(mm) (inch)	1500 60		3000 120		4500 180		6000 240		7500 300		9000 360				(mm) (inch)
9000													* 5550	* 5550	7350
360													* 12350	* 12350	290
7500									* 6750	* 6750			* 5150	* 5150	8540
300									* 14950	* 14950			* 11400	* 11400	340
6000									* 7050	* 7050	* 6700	5400	* 5000	* 5000	9340
240									* 15400	* 15400	* 12900	11600	* 11000	* 11000	370
4500							* 8650	* 8650	* 7700	7150	* 7150	5300	* 5000	4500	9840
180							* 18700	* 18700	* 16750	15400	* 15650	11400	* 11000	10000	390
3000					* 13600	* 13600	* 10250	9500	* 8550	6850	* 7600	5150	* 5150	4250	10100
120					* 29200	* 29200	* 22100	20500	* 18550	14700	* 16500	11000	* 11350	9300	400
1500					* 16350	13300	* 11750	8900	* 9400	6500	* 8050	4950	* 5500	4100	10130
60					* 35250	28700	* 25350	19200	* 20400	13950	* 17450	10600	* 12050	9050	400
0			* 7650	* 7650	* 17750	12650	* 12800	8450	* 10050	6200	8250	4800	* 6000	4150	9930
0			* 17400	* 17400	* 38450	27200	* 27650	18200	* 21800	13350	17700	10300	* 13200	9150	390
-1500	* 8000	* 8000	* 12050	* 12050	* 17950	12400	* 13200	8200	* 10300	6050	8150	4700	* 6850	4400	9490
-60	* 17850	* 17850	* 27250	* 27250	* 38950	26600	* 28550	17700	* 22350	13000	17500	10150	* 15050	9650	380
-3000	* 12750	* 12750	* 17650	* 17650	* 17150	12400	* 12850	8150	* 10000	6000			* 8050	4900	8770
-120	* 28600	* 28600	* 39900	* 39900	* 37150	26650	* 27750	17600	* 21550	12950			* 17750	10850	350
-4500	* 18400	* 18400	* 21200	* 21200	* 15250	12600	* 11500	8300	* 8600	6150			* 8200	6000	7690
-180	* 41350	* 41350	* 45650	* 45650	* 32850	27150	* 24700	17900	* 18100	13350			* 18050	13350	300
-6000					* 11500	* 11500	* 8100	* 8100					* 7950	* 7950	6060
-240					* 24250	* 24250							* 17400	* 17400	240

Illustration 188 g06281737

336 LN: 7560 kg (16667 lb) counterweight, 6.5 m (21 ft 4 inch) extreme service reach boom, 3.9 m (12 ft 10 inch) extreme service stick, 600 mm (24 inch) TG track shoes.

(mm) (inch)	1500 60		3000 120		4500 180		6000 240		7500 300		9000 360				(mm) (inch)
9000													* 6100	* 6100	7350
360													* 13600	* 13600	290
7500									* 7500	* 7500			* 5650	* 5650	8540
300									* 16550	16200			* 12500	* 12500	340
6000									* 7800	7450	* 7350	5400	* 5500	5050	9340
240									* 17100	15950	* 14200	11600	* 12100	11200	370
4500							* 9600	* 9600	* 8550	7150	* 7950	5300	* 5500	4500	9840
180							* 20750	* 20750	* 18600	15400	* 17400	11400	* 12150	10000	390
3000					* 15050	14500	* 11350	9500	* 9500	6850	* 8450	5150	* 5700	4250	10100
120					* 32300	31300	* 24550	20500	* 20650	14700	* 18400	11000	* 12500	9300	400
1500					* 18100	13300	* 13050	8900	* 10450	6500	8400	4950	* 6050	4100	10130
60					* 39050	28700	* 28200	19200	* 22700	13950	18050	10600	* 13250	9050	400
0			* 8150	* 8150	* 19700	12650	* 14200	8450	10750	6200	8250	4800	* 6600	4150	9930
0			* 18500	* 18500	* 42650	27200	* 30750	18200	23150	13350	17700	10300	* 14500	9150	390
-1500	* 8500	* 8500	* 12800	* 12800	* 19950	12400	* 14650	8200	10600	6050	8150	4700	* 7500	4400	9490
-60	* 19000	* 19000	* 28900	* 28900	* 43200	26600	* 31750	17700	22800	13000	17500	10150	* 16550	9650	380
-3000	* 13550	* 13550	* 18700	* 18700	* 19100	12400	* 14300	8150	10550	6000			8500	4900	8770
-120	* 30300	* 30300	* 42300	* 42300	* 41300	26650	* 30900	17600	22700	12950			18750	10850	350
-4500	* 19500	* 19500	* 23550	* 23550	* 17000	12600	* 12850	8300	* 9600	6150			* 9200	6000	7690
-180	* 43800	* 43800	* 50850	* 50850	* 36600	27150	* 27600	17900	* 20250	13350			* 20200	13350	300
-6000					* 12900	* 12900	* 9100	8700					* 8950	8600	6060
-240					* 27150	* 27150							* 19550	* 19550	240

Illustration 189 g06281740

336 LN: 7560 kg (16667 lb) counterweight, 6.5 m (21 ft 4 inch) extreme service reach boom, 3.9 m (12 ft 10 inch) extreme service stick, 600 mm (24 inch) TG track shoes heavy lift ON.

(mm) (inch)	1500 60		3000 120		4500 180		6000 240		7500 300		9000 360				(mm) (inch)
9000													* 5550	* 5550	7350
360													* 12350	* 12350	290
7500									* 6750	* 6750			* 5150	* 5150	8540
300									* 14950	* 14950			* 11400	* 11400	340
6000									* 7050	* 7050	* 6700	5500	* 5000	* 5000	9340
240									* 15400	* 15400	* 12900	11750	* 11000	* 11000	370
4500							* 8650	* 8650	* 7700	7250	* 7150	5400	* 5000	4600	9840
180							* 18700	* 18700	* 16750	15650	* 15650	11550	* 11000	10150	390
3000					* 13600	* 13600	* 10250	9650	* 8550	6950	* 7600	5200	* 5150	4300	10100
120					* 29200	* 29200	* 22100	20800	* 18550	14900	* 16500	11200	* 11350	9450	400
1500					* 16350	13500	* 11750	9050	* 9400	6600	* 8050	5050	* 5500	4200	10130
60					* 35250	29100	* 25350	19500	* 20400	14200	* 17450	10800	* 12050	9200	400
0			* 7650	* 7650	* 17750	12850	* 12800	8600	* 10050	6300	8350	4900	* 6000	4250	9930
0			* 17400	* 17400	* 38450	27600	* 27650	18500	* 21800	13600	18000	10500	* 13200	9300	390
-1500	* 8000	* 8000	* 12050	* 12050	* 17950	12600	* 13200	8350	* 10300	6150	8300	4800	* 6850	4450	9490
-60	* 17850	* 17850	* 27250	* 27250	* 38950	27050	* 28550	18000	* 22350	13250	17800	10300	* 15050	9850	380
-3000	* 12750	* 12750	* 17650	* 17650	* 17150	12600	* 12850	8300	* 10000	6100			* 8050	5000	8770
-120	* 28600	* 28600	* 39900	* 39900	* 37150	27050	* 27750	17900	* 21550	13200			* 17750	11050	350
-4500	* 18400	* 18400	* 21200	* 21200	* 15250	12800	* 11500	8450	* 8600	6250			* 8200	6100	7690
-180	* 41350	* 41350	* 45650	* 45650	* 32850	27550	* 24700	18200	* 18100	13550			* 18050	13550	300
-6000					* 11500	* 11500	* 8100	* 8100					* 7950	* 7950	6060
-240					* 24250	* 24250							* 17400	* 17400	240

Illustration 190 g06281763

336 LN: 7560 kg (16667 lb) counterweight, 6.5 m (21 ft 4 inch) extreme service reach boom, 3.9 m (12 ft 10 inch) extreme service stick, 600 mm (24 inch) heavy-duty TG track shoes.

(mm) (inch)	1500 60		3000 120		4500 180		6000 240		7500 300		9000 360				(mm) (inch)
9000													* 6100	* 6100	7350
360													* 13600	* 13600	290
7500									* 7500	* 7500			* 5650	* 5650	8540
300									* 16550	16450			* 12500	* 12500	340
6000									* 7800	7550	* 7350	5500	* 5500	5150	9340
240									* 17100	16200	* 14200	11750	* 12100	11400	370
4500							* 9600	* 9600	* 8550	7250	* 7950	5400	* 5500	4600	9840
180							* 20750	* 20750	* 18600	15650	* 17400	11550	* 12150	10150	390
3000					* 15050	14700	* 11350	9650	* 9500	6950	* 8450	5200	* 5700	4300	10100
120					* 32300	31750	* 24550	20800	* 20650	14900	* 18400	11200	* 12500	9450	400
1500					* 18100	13500	* 13050	9050	* 10450	6600	8550	5050	* 6050	4200	10130
60					* 39050	29100	* 28200	19500	* 22700	14200	18350	10800	* 13250	9200	400
0			* 8150	* 8150	* 19700	12850	* 14200	8600	10950	6300	8350	4900	* 6600	4250	9930
0			* 18500	* 18500	* 42650	27600	* 30750	18500	23550	13600	18000	10500	* 14500	9300	390
-1500	* 8500	* 8500	* 12800	* 12800	* 19950	12600	* 14650	8350	10750	6150	8300	4800	* 7500	4450	9490
-60	* 19000	* 19000	* 28900	* 28900	* 43200	27050	* 31750	18000	23150	13250	17800	10300	* 16550	9850	380
-3000	* 13550	* 13550	* 18700	* 18700	* 19100	12600	* 14300	8300	10750	6100			8650	5000	8770
-120	* 30300	* 30300	* 42300	* 42300	* 41300	27050	* 30900	17900	23100	13200			19100	11050	350
-4500	* 19500	* 19500	* 23550	* 23550	* 17000	12800	* 12850	8450	* 9600	6250			* 9200	6100	7690
-180	* 43800	* 43800	* 50850	* 50850	* 36600	27550	* 27600	18200	* 20250	13550			* 20200	13550	300
-6000					* 12900	* 12900	* 9100	8850					* 8950	8750	6060
-240					* 27150	* 27150							* 19550	* 19550	240

Illustration 191 g06281764

336 LN: 7560 kg (16667 lb) counterweight, 6.5 m (21 ft 4 inch) extreme service reach boom, 3.9 m (12 ft 10 inch) extreme service stick, 600 mm (24 inch) heavy-duty TG track shoes heavy lift ON.

(mm) (inch)	1500 60		3000 120		4500 180		6000 240		7500 300		9000 360				
kg / Lb															(mm) (inch)
9000													* 5550	* 5550	7350
360													* 12350	* 12350	290
7500									* 6750	* 6750			* 5150	* 5150	8540
300									* 14950	* 14950			* 11400	* 11400	340
6000									* 7050	* 7050	* 6700	5500	* 5000	* 5000	9340
240									* 15400	* 15400	* 12900	11800	* 11000	* 11000	370
4500							* 8650	* 8650	* 7700	7300	* 7150	5400	* 5000	4600	9840
180							* 18700	* 18700	* 16750	15650	* 15650	11600	* 11000	10200	390
3000					* 13600	* 13600	* 10250	9650	* 8550	6950	* 7600	5250	* 5150	4300	10100
120					* 29200	* 29200	* 22100	20850	* 18550	14950	* 16500	11200	* 11350	9500	400
1500					* 16350	13550	* 11750	9050	* 9400	6600	* 8050	5050	* 5500	4200	10130
60					* 35250	29200	* 25350	19500	* 20400	14200	* 17450	10850	* 12050	9200	400
0			* 7650	* 7650	* 17750	12850	* 12800	8600	* 10050	6350	* 8350	4900	* 6000	4250	9930
0			* 17400	* 17400	* 38450	27700	* 27650	18550	* 21800	13650	18050	10500	* 13200	9300	390
-1500	* 8000	* 8000	* 12050	* 12050	* 17950	12600	* 13200	8400	* 10300	6150	8300	4800	* 6850	4500	9490
-60	* 17850	* 17850	* 27250	* 27250	* 38950	27100	* 28550	18050	* 22350	13300	17850	10350	* 15050	9850	380
-3000	* 12750	* 12750	* 17650	* 17650	* 17150	12600	* 12850	8350	* 10000	6150			* 8050	5000	8770
-120	* 28600	* 28600	* 39900	* 39900	* 37150	27150	* 27750	17950	* 21550	13200			* 17750	11100	350
-4500	* 18400	* 18400	* 21200	* 21200	* 15250	12850	* 11500	8450	* 8600	6300			* 8200	6100	7690
-180	* 41350	* 41350	* 45650	* 45650	* 32850	27650	* 24700	18250	* 18100	13600			* 18050	13600	300
-6000					* 11500	* 11500	* 8100	* 8100					* 7950	* 7950	6060
-240					* 24250	* 24250							* 17400	* 17400	240

Illustration 192 g06281761

336 LN: 7560 kg (16667 lb) counterweight, 6.5 m (21 ft 4 inch) extreme service reach boom, 3.9 m (12 ft 10 inch) extreme service stick, 600 mm (24 inch) DG track shoes.

(mm) (inch)	1500 60		3000 120		4500 180		6000 240		7500 300		9000 360				
kg / Lb															(mm) (inch)
9000													* 6100	* 6100	7350
360													* 13600	* 13600	290
7500									* 7500	* 7500			* 5650	* 5650	8540
300									* 16550	16450			* 12500	* 12500	340
6000									* 7800	7550	* 7350	5500	* 5500	5150	9340
240									* 17100	16250	* 14200	11800	* 12100	11400	370
4500							* 9600	* 9600	* 8550	7300	* 7950	5400	* 5500	4600	9840
180							* 20750	* 20750	* 18600	15650	* 17400	11600	* 12150	10200	390
3000					* 15050	14750	* 11350	9650	* 9500	6950	* 8450	5250	* 5700	4300	10100
120					* 32300	31800	* 24550	20850	* 20650	14950	* 18400	11200	* 12500	9500	400
1500					* 18100	13550	* 13050	9050	* 10450	6600	8550	5050	* 6050	4200	10130
60					* 39050	29200	* 28200	19500	* 22700	14200	18400	10850	* 13250	9200	400
0			* 8150	* 8150	* 19700	12850	* 14200	8600	11000	6350	8400	4900	* 6600	4250	9930
0			* 18500	* 18500	* 42650	27700	* 30750	18550	23600	13650	18050	10500	* 14500	9300	390
-1500	* 8500	* 8500	* 12800	* 12800	* 19950	12600	* 14650	8400	10800	6150	8300	4800	* 7500	4500	9490
-60	* 19000	* 19000	* 28900	* 28900	* 43200	27100	* 31750	18050	23250	13300	17850	10350	* 16550	9850	380
-3000	* 13550	* 13550	* 18700	* 18700	* 19100	12600	* 14300	8350	10750	6150			8650	5000	8770
-120	* 30300	* 30300	* 42300	* 42300	* 41300	27150	* 30900	17950	23150	13200			19150	11100	350
-4500	* 19500	* 19500	* 23550	* 23550	* 17000	12850	* 12850	8450	* 9600	6300			* 9200	6100	7690
-180	* 43800	* 43800	* 50850	* 50850	* 36600	27650	* 27600	18250	* 20250	13600			* 20200	13600	300
-6000					* 12900	* 12900	* 9100	8900					* 8950	8750	6060
-240					* 27150	* 27150							* 19550	* 19550	240

Illustration 193 g06281762

336 LN: 7560 kg (16667 lb) counterweight, 6.5 m (21 ft 4 inch) extreme service reach boom, 3.9 m (12 ft 10 inch) extreme service stick, 600 mm (24 inch) DG track shoes heavy lift ON.

i07369341

Lifting Capacities

SMCS Code: 7000

WARNING

Failure to comply to the rated load can cause possible personal injury or property damage. This includes the risk of unintended boom lowering. Review the rated load of a particular work tool before performing any operation. Make adjustments to the rated load as necessary for non-standard configurations.

There may be local regulations and/or government regulations that govern the use of excavators which lift heavy objects. Obey all local and government regulations.

Lifting capacities should be used as a guide. Work tools, uneven ground conditions, soft ground conditions, or poor ground conditions have effects on lifting capacities. The operator is responsible for being aware of these effects.

The lifting capacities are defined by “ISO 10567 2007”. The lifting capacities are defined as the lower value of 75% of the static tipping capacity or 87% of the hydraulic lift capacity.

Note: Lifting capacities are based on a standard machine with the following conditions:

- Lift point: Stick nose without bucket
- Lubricants full
- Fuel tank full
- Steel track
- Complete cab with a 75 kg (165 lb) operator

Lifting capacities will vary with different work tools and attachments. The weight of a work tool attachment must be subtracted from the lift capacity. Consult your Cat dealer regarding the lifting capacities for specific work tools and attachments.

This machine may be equipped with various sticks. Lifting capacities may vary between the different sticks. Measure the distance on the stick between the boom hinge pin and the work tool hinge pin. This distance will inform you of the size of the stick that is equipped on the machine.

Use the lifting eye that is provided on the stick nose to lift objects. When the lifting eye is used, the connection must be made with a sling or shackle.

Note: Japan regulations require a shovel crane configuration to lift certain objects. A shovel crane has a rated load capacity, therefore, the lift capacities discussed below do not apply to a shovel crane configuration. Contact your Cat dealer for additional information.

Note: In European countries, regulations require a load sensing indicator and a boom and stick lowering control device if more than 1000 kg (2200 lb) is lifted during object handling applications. Regulations also require a load sensing indicator and a boom lowering control device if a moment that is greater than 40000 N·m (29500 lb ft) is created during object handling applications. If the machine is not equipped with these devices, even if the hydraulic lift capacity is capable, do not exceed a load of 1000 kg (2200 lb). Do not exceed a moment that is greater than 40000 N·m (29500 lb ft) in European object handling applications.

Configuration Identification

Note: Each component has a stamp to identify the configuration affecting lifting capacity.

The owner will need to check the machine configuration to identify the correct lifting capacity.

The configuration identifier will be located with the part number stamped on the component. Refer to the following table for the abbreviation of the configuration.

Table 17

Configuration Identification		
Component	**Configuration**	**Abbreviation**
Front	Reach Boom	R
	Mass Boom	M
	Variable Angle Boom	VA
	Super Long Reach Boom	SLR
	Standard	STD
	Heavy Duty	HD
	Extreme Special	ES
	Thumb Ready Stick	TR
Undercarriage	Short Undercarriage (Crawler)	STD
	Long Undercarriage (Crawler)	LC
	Long Narrow Undercarriage (Crawler)	LN

(continued)

(Table 17, contd)

Configuration Identification		
Compo-nent	**Configuration**	**Ab-brevi-ation**
Cylinder	Standard	-
	Heavy Lift	HL
Counter-weight	Metric Ton (tonne)	t[1]

[1] Counterweight stamp indicates metric ton. (example 1.0t = 1000 kg)

Symbols Found in the Lifting Capacity Charts

Below are symbols that are commonly found on lifting capacity charts for track excavators.

Note: Depending on the machine configuration, some symbols may not be used.

(mm)
(inch)
Measurements are provided in millimeters and inches

Lift Capacities are provided in kilograms and pounds

*
Load is limited by hydraulic lifting capacity rather than by a tipping load

Lift point radius

Lift point height

Lifting capacity over the front of the machine

Lifting capacity over the side of the machine

Heavy Lift ON

336 with 6800 kg (14991 lb) Counterweight

6.18 m (20 ft 3 inch) Mass Boom

2.55 m (8 ft 4 inch) Stick

(mm) (inch)	1500 60		3000 120		4500 180		6000 240		7500 300				(mm) (inch)
7500							* 9150	* 9150			* 8200	* 8200	6580
300							* 20250	* 20250			* 18200	* 18200	260
6000							* 9500	* 9500	* 8950	7250	* 7850	7050	7600
240							* 20650	* 20650			* 17250	15750	300
4500					* 13300	* 13300	* 10550	10000	* 9200	7050	* 7800	6100	8210
180					* 28550	* 28550	* 22800	21600	* 20100	15200	* 17200	13450	330
3000					* 16250	14300	* 11850	9450	* 9800	6800	* 8100	5600	8520
120					* 34900	30900	* 25650	20400	* 21300	14650	* 17850	12350	340
1500					* 18050	13500	* 12950	9000	* 10350	6600	8650	5450	8550
60					* 38950	29050	* 28000	19400	* 22400	14150	19100	11950	340
0					* 18200	13200	* 13400	8750	10400	6400	8950	5600	8310
0					* 39500	28400	* 29050	18800	22300	13800	19700	12300	330
-1500			* 16800	* 16800	* 17300	13200	* 13050	8650	* 10050	6400	* 9500	6100	7780
-60			* 38150	* 38150	* 37500	28400	* 28250	18650	* 21600	13800	* 20950	13500	310
-3000			* 19750	* 19750	* 15200	13450	* 11550	8800			* 9500	7350	6880
-120			* 42950	* 42950	* 32900	28900	* 24850	18950			* 20950	16300	270
-4500					* 11150	* 11150					* 8800	* 8800	5430
-180					* 23500	* 23500					* 19150	* 19150	210

Illustration 194 g06297131

336: 6800 kg (14991 lb) counterweight, 6.18 m (20 ft 3 inch) mass boom, 2.55 m (8 ft 4 inch) stick, 800 mm (31 inch) TG track shoes.

(mm) (inch)	1500 60		3000 120		4500 180		6000 240		7500 300				(mm) (inch)
+2													
7500							* 10150	* 10150			* 9000	* 9000	6580
300							* 22350	* 22350			* 19900	* 19900	260
6000							* 10500	10500	* 9800	7250	* 8550	7050	7600
240							* 22850	22550			* 18850	15750	300
4500					* 14650	* 14650	* 11650	10000	* 10200	7050	* 8550	6100	8210
180					* 31550	* 31550	* 25250	21600	* 22300	15200	* 18800	13450	330
3000					* 18000	14300	* 13150	9450	10800	6800	8850	5600	8520
120					* 38650	30900	* 28450	20400	23250	14650	* 19500	12350	340
1500					* 20000	13500	* 14350	9000	10550	6600	8650	5450	8550
60					* 43150	29050	* 31050	19400	22700	14150	19100	11950	340
0					* 20200	13200	14550	8750	10400	6400	8950	5600	8310
0					* 43800	28400	31250	18800	22300	13800	19700	12300	330
-1500			* 17800	* 17800	* 19200	13200	14450	8650	10350	6400	9850	6100	7780
-60			* 40400	* 40400	* 41600	28400	31050	18650	22300	13800	21750	13500	310
-3000			* 22000	* 22000	* 16950	13450	* 12900	8800			* 10600	7350	6880
-120			* 47800	* 47800	* 36600	28900	* 27650	18950			* 23350	16300	270
-4500					* 12450	* 12450					* 9850	* 9850	5430
-180					* 26300	* 26300					* 21500	* 21500	210

Illustration 195 g06297129

336: 6800 kg (14991 lb) counterweight, 6.18 m (20 ft 3 inch) mass boom, 2.55 m (8 ft 4 inch) stick, 800 mm (31 inch) TG track shoes heavy lift ON.

(mm) (inch)	1500 60		3000 120		4500 180		6000 240		7500 300				
kg / Lb													(mm) (inch)
7500							* 9150	* 9150			* 8200	* 8200	6580
300							* 20250	* 20250			* 18200	* 18200	260
6000							* 9500	* 9500	* 8950	7400	* 7850	7250	7600
240							* 20650	* 20650			* 17250	16100	300
4500					* 13300	* 13300	* 10550	10250	* 9200	7250	* 7800	6250	8210
180					* 28550	* 28550	* 22800	22050	* 20100	15550	* 17200	13800	330
3000					* 16250	14650	* 11850	9700	* 9800	7000	* 8100	5750	8520
120					* 34900	31600	* 25650	20850	* 21300	15050	* 17850	12650	340
1500					* 18050	13800	* 12950	9200	* 10350	6750	* 8750	5600	8550
60					* 38950	29750	* 28000	19850	* 22400	14500	* 19250	12300	340
0					* 18200	13550	* 13400	8950	* 10550	6600	9150	5750	8310
0					* 39500	29100	* 29050	19250	* 22800	14200	20200	12600	330
-1500			* 16800	* 16800	* 17300	13550	* 13050	8900	* 10050	6550	* 9500	6300	7780
-60			* 38150	* 38150	* 37500	29100	* 28250	19100	* 21600	14150	* 20950	13850	310
-3000			* 19750	* 19750	* 15200	13750	* 11550	9000			* 9500	7550	6880
-120			* 42950	* 42950	* 32900	29600	* 24850	19450			* 20950	16700	270
-4500					* 11150	* 11150					* 8800	* 8800	5430
-180					* 23500	* 23500					* 19150	* 19150	210

Illustration 196 g06297134

336: 6800 kg (14991 lb) counterweight, 6.18 m (20 ft 3 inch) mass boom, 2.55 m (8 ft 4 inch) stick, 800 mm (31 inch) heavy-duty TG track shoes.

(mm) (inch)	1500 60		3000 120		4500 180		6000 240		7500 300				
kg / Lb													(mm) (inch)
+ℓ													
7500							* 10150	* 10150			* 9000	* 9000	6580
300							* 22350	* 22350			* 19900	* 19900	260
6000							* 10500	* 10500	* 9800	7400	* 8550	7250	7600
240							* 22850	* 22850			* 18850	16100	300
4500					* 14650	* 14650	* 11650	10250	* 10200	7250	* 8550	6250	8210
180					* 31550	* 31550	* 25250	22050	* 22300	15550	* 18800	13800	330
3000					* 18000	14650	* 13150	9700	* 10900	7000	* 8900	5750	8520
120					* 38650	31600	* 28450	20850	* 23650	15050	* 19500	12650	340
1500					* 20000	13800	* 14350	9200	10800	6750	8900	5600	8550
60					* 43150	29750	* 31050	19850	23200	14500	19550	12300	340
0					* 20200	13550	14900	8950	10600	6600	9150	5750	8310
0					* 43800	29100	31950	19250	22850	14200	20200	12600	330
-1500			* 17800	* 17800	* 19200	13550	* 14500	8900	10600	6550	10100	6300	7780
-60			* 40400	* 40400	* 41600	29100	* 31400	19100	22850	14150	22250	13850	310
-3000			* 22000	* 22000	* 16950	13750	* 12900	9000			* 10600	7550	6880
-120			* 47800	* 47800	* 36600	29600	* 27650	19450			* 23350	16700	270
-4500					* 12450	* 12450					* 9850	* 9850	5430
-180					* 26300	* 26300					* 21500	* 21500	210

Illustration 197 g06297138

336: 6800 kg (14991 lb) counterweight, 6.18 m (20 ft 3 inch) mass boom, 2.55 m (8 ft 4 inch) stick, 800 mm (31 inch) heavy-duty TG track shoes heavy lift ON.

(mm) (inch)	1500 60		3000 120		4500 180		6000 240		7500 300				
kg / Lb													(mm) (inch)
7500							* 9150	* 9150			* 8200	* 8200	6580
300							* 20250	* 20250			* 18200	* 18200	260
6000							* 9500	* 9500	* 8950	7100	* 7850	6950	7600
240							* 20650	* 20650			* 17250	15500	300
4500					* 13300	* 13300	* 10550	9850	* 9200	6950	* 7800	6000	8210
180					* 28550	* 28550	* 22800	21250	* 20100	14950	* 17200	13250	330
3000					* 16250	14100	* 11850	9300	* 9800	6700	* 8100	5500	8520
120					* 34900	30400	* 25650	20100	* 21300	14450	* 17850	12150	340
1500					* 18050	13250	* 12950	8850	* 10350	6450	8500	5350	8550
60					* 38950	28550	* 28000	19050	22300	13900	18750	11750	340
0					* 18200	13000	* 13400	8600	10200	6300	8800	5500	8310
0					* 39500	27900	* 29050	18450	21950	13600	19350	12050	330
-1500			* 16800	* 16800	* 17300	13000	* 13050	8500	* 10050	6300	* 9500	6000	7780
-60			* 38150	* 38150	* 37500	27900	* 28250	18300	* 21600	13550	* 20950	13250	310
-3000			* 19750	* 19750	* 15200	13200	* 11550	8650			* 9500	7250	6880
-120			* 42950	* 42950	* 32900	28400	* 24850	18650			* 20950	16050	270
-4500					* 11150	* 11150					* 8800	* 8800	5430
-180					* 23500	* 23500					* 19150	* 19150	210

Illustration 198 g06297168

336: 6800 kg (14991 lb) counterweight, 6.18 m (20 ft 3 inch) mass boom, 2.55 m (8 ft 4 inch) stick, 700 mm (28 inch) TG track shoes.

(mm) (inch)	1500 60		3000 120		4500 180		6000 240		7500 300				
kg / Lb													(mm) (inch)
+2													
7500							* 10150	* 10150			* 9000	8950	6580
300							* 22350	* 22350			* 19900	* 19900	260
6000							* 10500	10350	* 9800	7100	* 8550	6950	7600
240							* 22850	22200			* 18850	15500	300
4500					* 14650	* 14650	* 11650	9850	* 10200	6950	* 8550	6000	8210
180					* 31550	* 31550	* 25250	21250	* 22300	14950	* 18800	13250	330
3000					* 18000	14100	* 13150	9300	10650	6700	8700	5500	8520
120					* 38650	30400	* 28450	20100	22900	14450	19200	12150	340
1500					* 20000	13250	* 14350	8850	10350	6450	8500	5350	8550
60					* 43150	28550	* 31050	19050	22300	13900	18750	11750	340
0					* 20200	13000	14300	8600	10200	6300	8800	5500	8310
0					* 43800	27900	30700	18450	21950	13600	19350	12050	330
-1500			* 17800	* 17800	* 19200	13000	14200	8500	10200	6300	9700	6000	7780
-60			* 40400	* 40400	* 41600	27900	30550	18300	21900	13550	21350	13250	310
-3000			* 22000	* 22000	* 16950	13200	* 12900	8650			* 10600	7250	6880
-120			* 47800	* 47800	* 36600	28400	* 27650	18650			* 23350	16050	270
-4500					* 12450	* 12450					* 9850	* 9850	5430
-180					* 26300	* 26300					* 21500	* 21500	210

Illustration 199 g06297174

336: 6800 kg (14991 lb) counterweight, 6.18 m (20 ft 3 inch) mass boom, 2.55 m (8 ft 4 inch) stick, 700 mm (28 inch) TG track shoes heavy lift ON.

(mm) (inch)	1500 60		3000 120		4500 180		6000 240		7500 300				(mm) (inch)
7500							* 9150	* 9150			* 8200	* 8200	6580
300							* 20250	* 20250			* 18200	* 18200	260
6000							* 9500	* 9500	* 8950	7200	* 7850	7050	7600
240							* 20650	* 20650			* 17250	15650	300
4500					* 13300	* 13300	* 10550	9950	* 9200	7050	* 7800	6050	8210
180					* 28550	* 28550	* 22800	21450	* 20100	15100	* 17200	13400	330
3000					* 16250	14250	* 11850	9400	* 9800	6800	* 8100	5550	8520
120					* 34900	30700	* 25650	20250	* 21300	14600	* 17850	12250	340
1500					* 18050	13400	* 12950	8950	* 10350	6550	8600	5400	8550
60					* 38950	28850	* 28000	19250	* 22400	14050	18950	11900	340
0					* 18200	13100	* 13400	8650	10300	6400	8900	5550	8310
0					* 39500	28200	* 29050	18650	22200	13750	19600	12200	330
-1500			* 16800	* 16800	* 17300	13150	* 13050	8600	* 10050	6350	* 9500	6100	7780
-60			* 38150	* 38150	* 37500	28200	* 28250	18500	* 21600	13700	* 20950	13400	310
-3000			* 19750	* 19750	* 15200	13350	* 11550	8750			* 9500	7300	6880
-120			* 42950	* 42950	* 32900	28700	* 24850	18850			* 20950	16200	270
-4500					* 11150	* 11150					* 8800	* 8800	5430
-180					* 23500	* 23500					* 19150	* 19150	210

Illustration 200 g06297181

336: 6800 kg (14991 lb) counterweight, 6.18 m (20 ft 3 inch) mass boom, 2.55 m (8 ft 4 inch) stick, 600 mm (24 inch) DG track shoes.

(mm) (inch)	1500 60		3000 120		4500 180		6000 240		7500 300				(mm) (inch)
+2													
7500							* 10150	* 10150			* 9000	* 9000	6580
300							* 22350	* 22350			* 19900	* 19900	260
6000							* 10500	10400	* 9800	7200	* 8550	7050	7600
240							* 22850	22400			* 18850	15650	300
4500					* 14650	* 14650	* 11650	9950	* 10200	7050	* 8550	6050	8210
180					* 31550	* 31550	* 25250	21450	* 22300	15100	* 18800	13400	330
3000					* 18000	14250	* 13150	9400	10750	6800	8800	5550	8520
120					* 38650	30700	* 28450	20250	23100	14600	19400	12250	340
1500					* 20000	13400	* 14350	8950	10500	6550	8600	5400	8550
60					* 43150	28850	* 31050	19250	22550	14050	18950	11900	340
0					* 20200	13100	14450	8650	10300	6400	8900	5550	8310
0					* 43800	28200	31050	18650	22200	13750	19600	12200	330
-1500			* 17800	* 17800	* 19200	13150	14350	8600	10300	6350	9800	6100	7780
-60			* 40400	* 40400	* 41600	28200	30850	18500	22150	13700	21600	13400	310
-3000			* 22000	* 22000	* 16950	13350	* 12900	8750			* 10600	7300	6880
-120			* 47800	* 47800	* 36600	28700	* 27650	18850			* 23350	16200	270
-4500					* 12450	* 12450					* 9850	* 9850	5430
-180					* 26300	* 26300					* 21500	* 21500	210

Illustration 201 g06297186

336: 6800 kg (14991 lb) counterweight, 6.18 m (20 ft 3 inch) mass boom, 2.55 m (8 ft 4 inch) stick, 600 mm (24 inch) DG track shoes heavy lift ON.

6.5 m (21 ft 4 inch) Reach Boom

2.8 m (9 ft 2 inch) Stick

(mm) (inch)	1500 60		3000 120		4500 180		6000 240		7500 300		9000				(mm) (inch)
7500													* 8500	7850	7340
300													* 18750	17600	290
6000							* 9100	* 9100	* 8400	7500			* 8200	6400	8250
240							* 19750	* 19750	* 18450	16100			* 18050	14200	330
4500					* 13100	* 13100	* 10300	10250	* 8950	7300			* 8200	5650	8820
180					* 28150	* 28150	* 22300	22050	* 19450	15700			* 18000	12450	350
3000					* 16300	14500	* 11750	9650	* 9650	7000	8350	5350	8150	5250	9110
120					* 34950	31300	* 25400	20850	* 20950	15100			18000	11550	360
1500					* 15900	13700	* 13000	9200	* 10300	6750	8200	5200	8000	5100	9140
60					* 38700	29500	* 28050	19800	* 22350	14550			17650	11250	360
0					* 18500	13400	* 13550	8900	10550	6600			8250	5200	8920
0					* 40100	28850	* 29400	19200	22650	14200			18100	11450	350
-1500			* 12350	* 12350	* 17800	13400	* 13450	8800	10450	6500			8900	5600	8420
-60			* 28100	* 28100	* 38600	28800	* 29100	19000	22550	14050			19650	12400	340
-3000			* 21250	* 21250	* 16200	13550	* 12450	8900	* 9400	6600			* 9200	6500	7600
-120			* 46200	* 46200	* 35050	29150	* 26800	19150					* 20200	14450	300
-4500			* 16900	* 16900	* 13150	* 13150	* 9800	9200					* 8950	8600	6330
-180			* 36350	* 36350	* 28150	* 28150	* 20500	19900					* 19600	19300	250

Illustration 202 g06297205

336: 6800 kg (14991 lb) counterweight, 6.5 m (21 ft 4 inch) reach boom, 2.8 m (9 ft 2 inch) stick, 800 mm (31 inch) TG track shoes.

(mm) (inch)	1500 60		3000 120		4500 180		6000 240		7500 300		9000				(mm) (inch)
7500													* 9300	7850	7340
300													* 20550	17600	290
6000							* 10000	* 10000	* 9300	7500			* 8950	6400	8250
240							* 21800	* 21800	* 20400	16100			* 19700	14200	330
4500					* 14450	* 14450	* 11400	10250	* 9900	7300			8700	5650	8820
180					* 31050	* 31050	* 24650	22050	* 21550	15700			19300	12450	350
3000					* 18000	14500	* 13000	9650	* 10700	7000	8350	5350	8150	5250	9110
120					* 38650	31300	* 28150	20850	* 23250	15100			18000	11550	360
1500					* 16850	13700	* 14350	9200	10750	6750	8200	5200	8000	5100	9140
60					* 41000	29500	* 31050	19800	23100	14550			17650	11250	360
0					* 19800	13400	14700	8900	10550	6600			8250	5200	8920
0					* 44400	28850	31650	19200	22650	14200			18100	11450	350
-1500			* 13100	* 13100	* 19700	13400	14600	8800	10450	6500			8900	5600	8420
-60			* 29800	* 29800	* 42800	28800	31400	19000	22550	14050			19650	12400	340
-3000			* 23600	* 23600	* 17950	13550	* 13800	8900	* 10450	6600			* 10200	6500	7600
-120			* 51300	* 51300	* 38850	29150	* 29800	19150					* 22500	14450	300
-4500			* 18850	* 18850	* 14650	13950	* 10900	9200					* 9950	8600	6330
-180			* 40550	* 40550	* 31350	30000	* 22850	19900					* 21850	19300	250

Illustration 203 g06297207

336: 6800 kg (14991 lb) counterweight, 6.5 m (21 ft 4 inch) reach boom, 2.8 m (9 ft 2 inch) stick, 800 mm (31 inch) TG track shoes heavy lift ON.

(mm) (inch)	1500 60		3000 120		4500 180		6000 240		7500 300		9000				
kg / Lb															(mm) (inch)
7500													* 8550	8050	7340
300													* 18950	18150	290
6000							* 9200	* 9200	* 8550	7750			* 8200	6600	8250
240							* 20000	* 20000	* 18750	16650			* 18100	14700	330
4500					* 13300	* 13300	* 10450	* 10450	* 9100	7550			* 8200	5850	8820
180					* 28500	* 28500	* 22600	* 22600	* 19750	16250			* 18100	12950	350
3000					* 16500	15000	* 11950	10000	* 9800	7300	8600	5600	8450	5500	9110
120					* 35450	32350	* 25800	21600	* 21300	15700			18650	12050	360
1500					* 15950	14250	* 13200	9550	* 10500	7050	8500	5450	8300	5350	9140
60					* 38800	30650	* 28500	20650	* 22750	15200			18300	11750	360
0					* 18750	13950	* 13800	9300	* 10900	6900			8550	5450	8920
0					* 40700	30050	* 29850	20050	23450	14850			18800	12050	350
-1500			* 12400	* 12400	* 18100	13950	* 13650	9200	* 10750	6850			9250	5900	8420
-60			* 28200	* 28200	* 39250	30000	* 29600	19850	* 23200	14700			* 20350	13000	340
-3000			* 21650	* 21650	* 16450	14100	* 12650	9300	* 9600	6950			* 9350	6800	7600
-120			* 47050	* 47050	* 35650	30350	* 27300	20000					* 20600	15100	300
-4500			* 17250	* 17250	* 13400	* 13400	* 10000	9550					* 9100	8950	6330
-180			* 37150	* 37150	* 28700	* 28700	* 20950	20700					* 20000	* 20000	250

Illustration 204 g06297210

336: 6800 kg (14991 lb) counterweight, 6.5 m (21 ft 4 inch) reach boom, 2.8 m (9 ft 2 inch) stick, 800 mm (31 inch) heavy-duty TG track shoes.

(mm) (inch)	1500 60		3000 120		4500 180		6000 240		7500 300		9000				
kg / Lb															(mm) (inch)
+2															
7500													* 9350	8050	7340
300													* 20650	18150	290
6000							* 10150	* 10150	* 9450	7750			* 9000	6600	8250
240							* 22050	* 22050	* 20700	16650			* 19800	14700	330
4500					* 14650	* 14650	* 11550	10550	* 10050	7550			* 9000	5850	8820
180					* 31400	* 31400	* 24950	22700	* 21850	16250			* 19750	12950	350
3000					* 18250	15000	* 13200	10000	* 10850	7300	8600	5600	8450	5500	9110
120					* 39150	32350	* 28500	21600	* 23600	15700			18650	12050	360
1500					* 16850	14250	* 14600	9550	11100	7050	8500	5450	8300	5350	9140
60					* 41100	30650	* 31500	20650	23850	15200			18300	11750	360
0					* 19850	13950	15200	9300	10900	6900			8550	5450	8920
0					* 45000	30050	32700	20050	23450	14850			18800	12050	350
-1500			* 13150	* 13150	* 20000	13950	15100	9200	10850	6850			9250	5900	8420
-60			* 29900	* 29900	* 43400	30000	32450	19850	23350	14700			20350	13000	340
-3000			* 23600	* 23600	* 18250	14100	* 14000	9300	* 10650	6950			* 10400	6800	7600
-120			* 52150	* 52150	* 39500	30350	* 30250	20000					* 22900	15100	300
-4500			* 19200	* 19200	* 14900	14450	* 11100	9550					* 10150	8950	6330
-180			* 41300	* 41300	* 31900	31150	* 23300	20700					* 22300	20100	250

Illustration 205 g06297214

336: 6800 kg (14991 lb) counterweight, 6.5 m (21 ft 4 inch) reach boom, 2.8 m (9 ft 2 inch) stick, 800 mm (31 inch) heavy-duty TG track shoes heavy lift ON.

(mm) (inch)	1500 60		3000 120		4500 180		6000 240		7500 300		9000				
kg / Lb															(mm) (inch)
7500													* 8550	7850	7340
300													* 18950	17650	290
6000							* 9200	* 9200	* 8550	7550			* 8200	6450	8250
240							* 20000	* 20000	* 18750	16200			* 18100	14300	330
4500					* 13300	* 13300	* 10450	10250	* 9100	7350			* 8200	5700	8820
180					* 28500	* 28500	* 22600	22100	* 19750	15800			* 18100	12550	350
3000					* 16500	14550	* 11950	9700	* 9800	7100	8350	5400	8200	5300	9110
120					* 35450	31450	* 25800	20950	* 21300	15250			18050	11700	360
1500					* 15950	13800	* 13200	9300	* 10500	6850	8200	5300	8050	5200	9140
60					* 38800	29750	* 28500	20000	* 22750	14750			17700	11400	360
0					* 18750	13550	* 13800	9000	10550	6700			8250	5300	8920
0					* 40700	29150	* 29850	19450	22700	14400			18200	11650	350
-1500			* 12400	* 12400	* 18100	13550	* 13650	8950	10500	6600			8950	5700	8420
-60			* 28200	* 28200	* 39250	29100	* 29600	19250	22600	14250			19700	12600	340
-3000			* 21650	* 21650	* 16450	13700	* 12650	9000	* 9600	6700			* 9350	6600	7600
-120			* 47050	* 47050	* 35650	29450	* 27300	19400					* 20600	14650	300
-4500			* 17250	* 17250	* 13400	* 13400	* 10000	9300					* 9100	8700	6330
-180			* 37150	* 37150	* 28700	* 28700	* 20950	20100					* 20000	19500	250

Illustration 206 g06297255

336: 6800 kg (14991 lb) counterweight, 6.5 m (21 ft 4 inch) reach boom, 2.8 m (9 ft 2 inch) stick, 700 mm (28 inch) TG track shoes.

(mm) (inch)	1500 60		3000 120		4500 180		6000 240		7500 300		9000				
kg / Lb															(mm) (inch)
+ℓ															
7500													* 9350	7850	7340
300													* 20650	17650	290
6000							* 10150	* 10150	* 9450	7550			* 9000	6450	8250
240							* 22050	* 22050	* 20700	16200			* 19800	14300	330
4500					* 14650	* 14650	* 11550	10250	* 10050	7350			8700	5700	8820
180					* 31400	* 31400	* 24950	22100	* 21850	15800			19300	12550	350
3000					* 18250	14550	* 13200	9700	* 10850	7100	8350	5400	8200	5300	9110
120					* 39150	31450	* 28500	20950	* 23600	15250			18050	11700	360
1500					* 16850	13800	* 14600	9300	10750	6850	8200	5300	8050	5200	9140
60					* 41100	29750	* 31500	20000	23100	14750			17700	11400	360
0					* 19850	13550	14750	9000	10550	6700			8250	5300	8920
0					* 45000	29150	31650	19450	22700	14400			18200	11650	350
-1500			* 13150	* 13150	* 20000	13550	14650	8950	10500	6600			8950	5700	8420
-60			* 29900	* 29900	* 43400	29100	31450	19250	22600	14250			19700	12600	340
-3000			* 23600	* 23600	* 18250	13700	* 14000	9000	10600	6700			* 10400	6600	7600
-120			* 52150	* 52150	* 39500	29450	* 30250	19400					* 22900	14650	300
-4500			* 19200	* 19200	* 14900	14050	* 11100	9300					* 10150	8700	6330
-180			* 41300	* 41300	* 31900	30250	* 23300	20100					* 22300	19500	250

Illustration 207 g06297259

336: 6800 kg (14991 lb) counterweight, 6.5 m (21 ft 4 inch) reach boom, 2.8 m (9 ft 2 inch) stick, 700 mm (28 inch) TG track shoes heavy lift ON.

(mm) (inch)	1500 60		3000 120		4500 180		6000 240		7500 300		9000				
kg / Lb															(mm) (inch)
7500													* 8550	7950	7340
300													* 18950	17800	290
6000							* 9200	* 9200	* 8550	7600			* 8200	6500	8250
240							* 20000	* 20000	* 18750	16350			* 18100	14450	330
4500					* 13300	* 13300	* 10450	10350	* 9100	7400			* 8200	5750	8820
180					* 28500	* 28500	* 22600	22300	* 19750	15950			* 18100	12700	350
3000					* 16500	14700	* 11950	9800	* 9800	7150	8450	5450	8300	5350	9110
120					* 35450	31750	* 25800	21150	* 21300	15400			18250	11800	360
1500					* 15950	13950	* 13200	9400	* 10500	6900	8300	5350	8150	5250	9140
60					* 38800	30050	* 28500	20200	* 22750	14900			17900	11500	360
0					* 18750	13700	* 13800	9100	10650	6750			8350	5350	8920
0					* 40700	29450	* 29850	19650	22950	14550			18350	11800	350
-1500			* 12400	* 12400	* 18100	13700	* 13650	9050	10600	6700			9050	5750	8420
-60			* 28200	* 28200	* 39250	29400	* 29600	19450	22800	14400			19900	12700	340
-3000			* 21650	* 21650	* 16450	13850	* 12650	9100	* 9600	6800			* 9350	6700	7600
-120			* 47050	* 47050	* 35650	29750	* 27300	19600					* 20600	14800	300
-4500			* 17250	* 17250	* 13400	* 13400	* 10000	9400					* 9100	8750	6330
-180			* 37150	* 37150	* 28700	* 28700	* 20950	20300					* 20000	19700	250

Illustration 208 g06297262

336: 6800 kg (14991 lb) counterweight, 6.5 m (21 ft 4 inch) reach boom, 2.8 m (9 ft 2 inch) stick, 600 mm (24 inch) DG track shoes.

(mm) (inch)	1500 60		3000 120		4500 180		6000 240		7500 300		9000				
kg / Lb															(mm) (inch)
+2															
7500													* 9350	7950	7340
300													* 20650	17800	290
6000							* 10150	* 10150	* 9450	7600			* 9000	6500	8250
240							* 22050	* 22050	* 20700	16350			* 19800	14450	330
4500					* 14650	* 14650	* 11550	10350	* 10050	7400			8800	5750	8820
180					* 31400	* 31400	* 24950	22300	* 21850	15950			19500	12700	350
3000					* 18250	14700	* 13200	9800	* 10850	7150	8450	5450	8300	5350	9110
120					* 39150	31750	* 28500	21150	* 23600	15400			18250	11800	360
1500					* 16850	13950	* 14600	9400	10850	6900	8300	5350	8150	5250	9140
60					* 41100	30050	* 31500	20200	23350	14900			17900	11500	360
0					* 19850	13700	14900	9100	10650	6750			8350	5350	8920
0					* 45000	29450	32000	19650	22950	14550			18350	11800	350
-1500			* 13150	* 13150	* 20000	13700	14800	9050	10600	6700			9050	5750	8420
-60			* 29900	* 29900	* 43400	29400	31750	19450	22800	14400			19900	12700	340
-3000			* 23600	* 23600	* 18250	13850	* 14000	9100	* 10650	6800			* 10400	6700	7600
-120			* 52150	* 52150	* 39500	29750	* 30250	19600					* 22900	14800	300
-4500			* 19200	* 19200	* 14900	14200	* 11100	9400					* 10150	8750	6330
-180			* 41300	* 41300	* 31900	30550	* 23300	20300					* 22300	19700	250

Illustration 209 g06297264

336: 6800 kg (14991 lb) counterweight, 6.5 m (21 ft 4 inch) reach boom, 2.8 m (9 ft 2 inch) stick, 600 mm (24 inch) DG track shoes heavy lift ON.

6.5 m (21 ft 4 inch) Reach Boom

3.2 m (10 ft 6 inch) Stick

(mm) (inch)	1500 60		3000 120		4500 180		6000 240		7500 300		9000 360				(mm) (inch)
7500									* 8000	7800			* 6750	* 6750	7700
300													* 14900	* 14900	300
6000									* 8100	7700			* 6550	6150	8580
240									* 17700	16600			* 14450	13700	340
4500					* 12300	* 12300	* 9900	* 9900	* 8700	7500	* 7750	5650	* 6600	5500	9130
180							* 21450	* 21450	* 18900	16150			* 14500	12150	360
3000					* 15600	15050	* 11450	9950	* 9500	7200	* 8400	5500	* 6850	5150	9410
120					* 33500	32450	* 24750	21450	* 20550	15550	18250	11800	* 15100	11300	370
1500					* 17950	14150	* 12850	9450	* 10250	6950	8350	5350	* 7350	5000	9440
60					* 38750	30450	* 27750	20400	* 22200	15000	17950	11550	* 16150	11050	380
0					* 18750	13750	* 13600	9150	10700	6750	8250	5300	7950	5100	9220
0					* 40550	29550	* 29500	19700	23050	14550	17750	11350	17550	11250	370
-1500			* 13300	* 13300	* 18350	13650	* 13700	9000	10600	6650			8550	5450	8750
-60			* 30050	* 30050	* 39800	29400	* 29700	19450	22850	14350			18850	12050	350
-3000			* 20950	* 20950	* 17000	13750	* 12950	9050	* 10050	6700			* 9150	6250	7960
-120			* 47450	* 47450	* 36850	29600	* 28000	19500	* 21500	14500			* 20200	13800	320
-4500			* 19150	* 19150	* 14400	14050	* 10900	9250					* 9200	7950	6750
-180			* 41200	* 41200	* 30950	30300	* 23250	20000					* 20250	17750	270

Illustration 210 g06297270

336: 6800 kg (14991 lb) counterweight, 6.5 m (21 ft 4 inch) reach boom, 3.2 m (10 ft 6 inch) stick, 800 mm (31 inch) TG track shoes.

(mm) (inch)	1500 60		3000 120		4500 180		6000 240		7500 300		9000 360				(mm) (inch)
+2															
7500									* 8750	7800			* 7400	* 7400	7700
300													* 16300	* 16300	300
6000									* 8950	7700			* 7200	6150	8580
240									* 19550	16600			* 15800	13700	340
4500					* 13550	* 13550	* 10950	10500	* 9600	7500	* 8500	5650	* 7250	5500	9130
180							* 23650	22650	* 20900	16150			* 15900	12150	360
3000					* 17200	15050	* 12650	9950	* 10500	7200	8500	5500	* 7500	5150	9410
120					* 37000	32450	* 27400	21450	* 22800	15550	18250	11800	* 16500	11300	370
1500					* 19850	14150	* 14200	9450	10950	6950	8350	5350	7800	5000	9440
60					* 42800	30450	* 30700	20400	23500	15000	17950	11550	17150	11050	380
0					* 20700	13750	15000	9150	10700	6750	8250	5300	7950	5100	9220
0					* 44850	29550	32200	19700	23050	14550	17750	11350	17550	11250	370
-1500			* 14100	* 14100	* 20300	13650	14800	9000	10600	6650			8550	5450	8750
-60			* 31850	* 31850	* 44050	29400	31850	19450	22850	14350			18850	12050	350
-3000			* 22200	* 22200	* 18850	13750	* 14350	9050	10650	6700			9850	6250	7960
-120			* 50250	* 50250	* 40800	29600	* 31050	19500	22950	14500			21750	13800	320
-4500			* 21250	* 21250	* 16000	14050	* 12150	9250					* 10250	7950	6750
-180			* 45750	* 45750	* 34400	30300	* 25800	20000					* 22550	17750	270

Illustration 211 g06297272

336: 6800 kg (14991 lb) counterweight, 6.5 m (21 ft 4 inch) reach boom, 3.2 m (10 ft 6 inch) stick, 800 mm (31 inch) TG track shoes heavy lift ON.

(mm) (inch)	1500 60		3000 120		4500 180		6000 240		7500 300		9000 360				
kg / Lb															(mm) (inch)
7500									* 8000	7900			* 6750	* 6750	7700
300													* 14900	* 14900	300
6000									* 8100	7800			* 6550	6250	8580
240									* 17700	16800			* 14450	13900	340
4500					* 12300	* 12300	* 9900	* 9900	* 8700	7600	* 7750	5700	* 6600	5600	9130
180							* 21450	* 21450	* 18900	16350			* 14500	12300	360
3000					* 15600	15250	* 11450	10100	* 9500	7350	* 8400	5600	* 6850	5200	9410
120					* 33500	32900	* 24750	21750	* 20550	15750	* 18300	12000	* 15100	11500	370
1500					* 17950	14350	* 12850	9600	* 10250	7050	8500	5450	* 7350	5100	9440
60					* 38750	30900	* 27750	20700	* 22200	15200	18250	11750	* 16150	11200	380
0					* 18750	13950	* 13600	9300	* 10750	6850	8400	5350	8100	5200	9220
0					* 40550	30000	* 29500	20000	* 23250	14800	18050	11550	17800	11400	370
-1500			* 13300	* 13300	* 18350	13850	* 13700	9150	* 10750	6750			8700	5550	8750
-60			* 30050	* 30050	* 39800	29800	* 29700	19750	23200	14600			19150	12200	350
-3000			* 20950	* 20950	* 17000	13950	* 12950	9200	* 10050	6800			* 9150	6350	7960
-120			* 47450	* 47450	* 36850	30050	* 28000	19800	* 21500	14700			* 20200	14000	320
-4500			* 19150	* 19150	* 14400	14250	* 10900	9400					* 9200	8050	6750
-180			* 41200	* 41200	* 30950	30700	* 23250	20300					* 20250	18000	270

Illustration 212 g06297273

336: 6800 kg (14991 lb) counterweight, 6.5 m (21 ft 4 inch) reach boom, 3.2 m (10 ft 6 inch) stick, 800 mm (31 inch) heavy-duty TG track shoes.

(mm) (inch)	1500 60		3000 120		4500 180		6000 240		7500 300		9000 360				
kg / Lb															(mm) (inch)
+2															
7500									* 8750	7900			* 7400	* 7400	7700
300													* 16300	* 16300	300
6000									* 8950	7800			* 7200	6250	8580
240									* 19550	16800			* 15800	13900	340
4500					* 13550	* 13550	* 10950	10650	* 9600	7600	* 8500	5700	* 7250	5600	9130
180							* 23650	22950	* 20900	16350			* 15900	12300	360
3000					* 17200	15250	* 12650	10100	* 10500	7350	8650	5600	* 7500	5200	9410
120					* 37000	32900	* 27400	21750	* 22800	15750	18550	12000	* 16500	11500	370
1500					* 19850	14350	* 14200	9600	11100	7050	8500	5450	7900	5100	9440
60					* 42800	30900	* 30700	20700	23900	15200	18250	11750	17400	11200	380
0					* 20700	13950	* 15100	9300	10900	6850	8400	5350	8100	5200	9220
0					* 44850	30000	* 32650	20000	23400	14800	18050	11550	17800	11400	370
-1500			* 14100	* 14100	* 20300	13850	15050	9150	10800	6750			8700	5550	8750
-60			* 31850	* 31850	* 44050	29800	32350	19750	23200	14600			19150	12200	350
-3000			* 22200	* 22200	* 18850	13950	* 14350	9200	10800	6800			10000	6350	7960
-120			* 50250	* 50250	* 40800	30050	* 31050	19800	23300	14700			22100	14000	320
-4500			* 21250	* 21250	* 16000	14250	* 12150	9400					* 10250	8050	6750
-180			* 45750	* 45750	* 34400	30700	* 25800	20300					* 22550	18000	270

Illustration 213 g06297275

336: 6800 kg (14991 lb) counterweight, 6.5 m (21 ft 4 inch) reach boom, 3.2 m (10 ft 6 inch) stick, 800 mm (31 inch) heavy-duty TG track shoes heavy lift ON.

(mm) (inch)	1500 60		3000 120		4500 180		6000 240		7500 300		9000 360				
kg / Lb															(mm) (inch)
7500									* 8000	7700			* 6750	* 6750	7700
300													* 14900	* 14900	300
6000									* 8100	7600			* 6550	6100	8580
240									* 17700	16350			* 14450	13500	340
4500					* 12300	* 12300	* 9900	* 9900	* 8700	7400	* 7750	5550	* 6600	5400	9130
180							* 21450	* 21450	* 18900	15900			* 14500	11950	360
3000					* 15600	14800	* 11450	9800	* 9500	7100	8350	5400	* 6850	5050	9410
120					* 33500	31950	* 24750	21150	* 20550	15300	17950	11650	* 15100	11150	370
1500					* 17950	13900	* 12850	9300	* 10250	6850	8200	5300	* 7350	4950	9440
60					* 38750	30000	* 27750	20100	* 22200	14750	17650	11350	* 16150	10850	380
0					* 18750	13550	* 13600	9000	10550	6650	8100	5200	7850	5000	9220
0					* 40550	29100	* 29500	19400	22650	14300	17450	11150	17250	11050	370
-1500			* 13300	* 13300	* 18350	13450	* 13700	8900	10450	6550			8400	5350	8750
-60			* 30050	* 30050	* 39800	28900	* 29700	19100	22450	14150			18550	11800	350
-3000			* 20950	* 20950	* 17000	13550	* 12950	8900	* 10050	6600			* 9150	6150	7960
-120			* 47450	* 47450	* 36850	29150	* 28000	19200	* 21500	14250			* 20200	13550	320
-4500			* 19150	* 19150	* 14400	13850	* 10900	9100					* 9200	7800	6750
-180			* 41200	* 41200	* 30950	29800	* 23250	19700					* 20250	17500	270

Illustration 214 g06297308

336: 6800 kg (14991 lb) counterweight, 6.5 m (21 ft 4 inch) reach boom, 3.2 m (10 ft 6 inch) stick, 700 mm (28 inch) TG track shoes.

(mm) (inch)	1500 60		3000 120		4500 180		6000 240		7500 300		9000 360				
kg / Lb															(mm) (inch)
+2															
7500									* 8750	7700			* 7400	7350	7700
300													* 16300	* 16300	300
6000									* 8950	7600			* 7200	6100	8580
240									* 19550	16350			* 15800	13500	340
4500					* 13550	* 13550	* 10950	10350	* 9600	7400	* 8500	5550	* 7250	5400	9130
180							* 23650	22300	* 20900	15900			* 15900	11950	360
3000					* 17200	14800	* 12650	9800	* 10500	7100	8350	5400	* 7500	5050	9410
120					* 37000	31950	* 27400	21150	* 22800	15300	17950	11650	* 16500	11150	370
1500					* 19850	13900	* 14200	9300	10750	6850	8200	5300	7650	4950	9440
60					* 42800	30000	* 30700	20100	23150	14750	17650	11350	16850	10850	380
0					* 20700	13550	14750	9000	10550	6650	8100	5200	7850	5000	9220
0					* 44850	29100	31650	19400	22650	14300	17450	11150	17250	11050	370
-1500			* 14100	* 14100	* 20300	13450	14550	8900	10450	6550			8400	5350	8750
-60			* 31850	* 31850	* 44050	28900	31300	19100	22450	14150			18550	11800	350
-3000			* 22200	* 22200	* 18850	13550	* 14350	8900	10500	6600			9650	6150	7960
-120			* 50250	* 50250	* 40800	29150	* 31050	19200	22550	14250			21400	13550	320
-4500			* 21250	* 21250	* 16000	13850	* 12150	9100					* 10250	7800	6750
-180			* 45750	* 45750	* 34400	29800	* 25800	19700					* 22550	17500	270

Illustration 215 g06297309

336: 6800 kg (14991 lb) counterweight, 6.5 m (21 ft 4 inch) reach boom, 3.2 m (10 ft 6 inch) stick, 700 mm (28 inch) TG track shoes heavy lift ON.

(mm) (inch)	1500 60		3000 120		4500 180		6000 240		7500 300		9000 360				
kg / Lb															(mm) (inch)
7500									* 8000	7750			* 6750	* 6750	7700
300													* 14900	* 14900	300
6000									* 8100	7700			* 6550	6150	8580
240									* 17700	16500			* 14450	13650	340
4500					* 12300	* 12300	* 9900	* 9900	* 8700	7450	* 7750	5600	* 6600	5450	9130
180							* 21450	* 21450	* 18900	16050			* 14500	12050	360
3000					* 15600	14950	* 11450	9900	* 9500	7200	* 8400	5450	* 6850	5100	9410
120					* 33500	32250	* 24750	21350	* 20550	15450	18150	11750	* 15100	11250	370
1500					* 17950	14050	* 12850	9400	* 10250	6900	8300	5350	* 7350	5000	9440
60					* 38750	30300	* 27750	20300	* 22200	14900	17850	11500	* 16150	10950	380
0					* 18750	13650	* 13600	9100	10650	6700	8200	5250	7900	5050	9220
0					* 40550	29400	* 29500	19600	22900	14450	17650	11300	17450	11150	370
-1500			* 13300	* 13300	* 18350	13600	* 13700	8950	10550	6650			8500	5400	8750
-60			* 30050	* 30050	* 39800	29200	* 29700	19300	22700	14300			18750	11950	350
-3000			* 20950	* 20950	* 17000	13700	* 12950	9000	* 10050	6650			* 9150	6200	7960
-120			* 47450	* 47450	* 36850	29450	* 28000	19400	* 21500	14400			* 20200	13700	320
-4500			* 19150	* 19150	* 14400	14000	* 10900	9200					* 9200	7900	6750
-180			* 41200	* 41200	* 30950	30100	* 23250	19900					* 20250	17650	270

Illustration 216 g06297311

336: 6800 kg (14991 lb) counterweight, 6.5 m (21 ft 4 inch) reach boom, 3.2 m (10 ft 6 inch) stick, 600 mm (24 inch) DG track shoes.

(mm) (inch)	1500 60		3000 120		4500 180		6000 240		7500 300		9000 360				
kg / Lb															(mm) (inch)
+2															
7500									* 8750	7750			* 7400	* 7400	7700
300													* 16300	* 16300	300
6000									* 8950	7700			* 7200	6150	8580
240									* 19550	16500			* 15800	13650	340
4500					* 13550	* 13550	* 10950	10450	* 9600	7450	* 8500	5600	* 7250	5450	9130
180							* 23650	22500	* 20900	16050			* 15900	12050	360
3000					* 17200	14950	* 12650	9900	* 10500	7200	8450	5450	* 7500	5100	9410
120					* 37000	32250	* 27400	21350	* 22800	15450	18150	11750	* 16500	11250	370
1500					* 19850	14050	* 14200	9400	10850	6900	8300	5350	7750	5000	9440
60					* 42800	30300	* 30700	20300	23350	14900	17850	11500	17050	10950	380
0					* 20700	13650	14900	9100	10650	6700	8200	5250	7900	5050	9220
0					* 44850	29400	32000	19600	22900	14450	17650	11300	17450	11150	370
-1500			* 14100	* 14100	* 20300	13600	14750	8950	10550	6650			8500	5400	8750
-60			* 31850	* 31850	* 44050	29200	31650	19300	22700	14300			18750	11950	350
-3000			* 22200	* 22200	* 18850	13700	* 14350	9000	10600	6650			9750	6200	7960
-120			* 50250	* 50250	* 40800	29450	* 31050	19400	22800	14400			21650	13700	320
-4500			* 21250	* 21250	* 16000	14000	* 12150	9200					* 10250	7900	6750
-180			* 45750	* 45750	* 34400	30100	* 25800	19900					* 22550	17650	270

Illustration 217 g06297312

336: 6800 kg (14991 lb) counterweight, 6.5 m (21 ft 4 inch) reach boom, 3.2 m (10 ft 6 inch) stick, 600 mm (24 inch) DG track shoes heavy lift ON.

6.5 m (21 ft 4 inch) Reach Boom

3.9 m (12 ft 10 inch) Stick

(mm) (inch)	1500 60		3000 120		4500 180		6000 240		7500 300		9000 360				(mm) (inch)
9000													* 5650	* 5650	7350
360													* 12600	* 12600	290
7500									* 7000	* 7000			* 5250	* 5250	8540
300									* 15400	* 15400			* 11650	* 11650	340
6000									* 7250	* 7250	* 6850	5800	* 5100	* 5100	9340
240									* 15900	* 15900	* 13150	12350	* 11250	* 11250	370
4500							* 8900	* 8900	* 7950	7600	* 7400	5700	* 5150	4900	9840
180							* 19250	* 19250	* 17300	16350	* 16200	12200	* 11250	10750	390
3000					* 13950	* 13950	* 10550	10100	* 8850	7300	* 7850	5500	* 5300	4600	10100
120					* 29950	* 29950	* 22800	21800	* 19200	15650	* 17150	11850	* 11600	10100	400
1500					* 16800	14400	* 12100	9550	* 9750	6950	8350	5350	* 5600	4500	10130
60					* 36250	30950	* 26150	20600	* 21100	15000	17950	11500	* 12300	9850	400
0			* 7750	* 7750	* 18300	13750	* 13200	9150	* 10400	6750	8200	5200	* 6100	4550	9930
0			* 17650	* 17650	* 39600	29600	* 28550	19700	* 22550	14500	17600	11200	* 13450	10000	390
-1500	* 8150	* 8150	* 12150	* 12150	* 18500	13550	* 13600	8950	10550	6600	8100	5150	* 6950	4800	9490
-60	* 18100	* 18100	* 27450	* 27450	* 40100	29100	* 29500	19250	22650	14150	17450	11050	* 15350	10550	380
-3000	* 12900	* 12900	* 17750	* 17750	* 17700	13550	* 13300	8900	* 10400	6550			* 8400	5350	8770
-120	* 28850	* 28850	* 40150	* 40150	* 38350	29100	* 28700	19150	* 22400	14100			* 18500	11850	350
-4500	* 18500	* 18500	* 21900	* 21900	* 15800	13750	* 11950	9000	* 8950	6700			* 8550	6500	7690
-180	* 41600	* 41600	* 47250	* 47250	* 34000	29550	* 25650	19400	* 18850	14450			* 18850	14450	300
-6000					* 12000	* 12000	* 8500	* 8500					* 8350	* 8350	6060
-240					* 25300	* 25300							* 18250	* 18250	240

Illustration 218 g06297528

336: 6800 kg (14991 lb) counterweight, 6.5 m (21 ft 4 inch) reach boom, 3.9 m (12 ft 10 inch) stick, 800 mm (31 inch) TG track shoes.

(mm) (inch)	1500 60		3000 120		4500 180		6000 240		7500 300		9000 360				(mm) (inch)
9000													* 6200	* 6200	7350
360													* 13800	* 13800	290
7500									* 7750	* 7750			* 5800	* 5800	8540
300									* 17050	* 17050			* 12750	* 12750	340
6000									* 8050	7850	* 7500	5800	* 5600	5400	9340
240									* 17600	16850	* 14450	12350	* 12350	12000	370
4500							* 9800	* 9800	* 8800	7600	* 8250	5700	* 5650	4900	9840
180							* 21250	* 21250	* 19150	16350	* 18000	12200	* 12400	10750	390
3000					* 15400	* 15400	* 11650	10100	* 9800	7300	8550	5500	* 5800	4600	10100
120					* 33100	* 33100	* 25200	21800	* 21250	15650	18300	11850	* 12750	10100	400
1500					* 18600	14400	* 13400	9550	* 10800	6950	8350	5350	* 6150	4500	10130
60					* 40050	30950	* 28950	20600	* 23400	15000	17950	11500	* 13500	9850	400
0			* 8250	* 8250	* 20250	13750	* 14600	9150	10700	6750	8200	5200	* 6700	4550	9930
0			* 18750	* 18750	* 43800	29600	* 31650	19700	23000	14500	17600	11200	* 14750	10000	390
-1500	* 8650	* 8650	* 12900	* 12900	* 20500	13550	14750	8950	10550	6600	8100	5150	7550	4800	9490
-60	* 19250	* 19250	* 29150	* 29150	* 44400	29100	31650	19250	22650	14150	17450	11050	16650	10550	380
-3000	* 13650	* 13650	* 18800	* 18800	* 19650	13550	14700	8900	10500	6550			8450	5350	8770
-120	* 30550	* 30550	* 42550	* 42550	* 42500	29100	31550	19150	22600	14100			18700	11850	350
-4500	* 19600	* 19600	* 24300	* 24300	* 17500	13750	* 13300	9000	* 10000	6700			* 9550	6500	7690
-180	* 44050	* 44050	* 52400	* 52400	* 37750	29550	* 28500	19400	* 21000	14450			* 21000	14450	300
-6000					* 13400	* 13400	* 9500	9400					* 9300	9300	6060
-240					* 28200	* 28200							* 20400	* 20400	240

Illustration 219 g06297534

336: 6800 kg (14991 lb) counterweight, 6.5 m (21 ft 4 inch) reach boom, 3.9 m (12 ft 10 inch) stick, 800 mm (31 inch) TG track shoes heavy lift ON.

(mm) (inch)	1500 60		3000 120		4500 180		6000 240		7500 300		9000 360				(mm) (inch)
9000													* 5650	* 5650	7350
360													* 12600	* 12600	290
7500									* 7000	* 7000			* 5250	* 5250	8540
300									* 15400	* 15400			* 11650	* 11650	340
6000									* 7250	* 7250	* 6850	5850	* 5100	* 5100	9340
240									* 15900	* 15900	* 13150	12550	* 11250	* 11250	370
4500							* 8900	* 8900	* 7950	7700	* 7400	5750	* 5150	4950	9840
180							* 19250	* 19250	* 17300	16550	* 16200	12350	* 11250	10950	390
3000					* 13950	* 13950	* 10550	10250	* 8850	7400	* 7850	5600	* 5300	4650	10100
120					* 29950	* 29950	* 22800	22100	* 19200	15900	* 17150	12050	* 11600	10250	400
1500					* 16800	14600	* 12100	9700	* 9750	7100	* 8350	5450	* 5600	4550	10130
60					* 36250	31400	* 26150	20900	* 21100	15250	* 18150	11700	* 12300	10000	400
0			* 7750	* 7750	* 18300	13950	* 13200	9300	* 10400	6850	8300	5300	* 6100	4600	9930
0			* 17650	* 17650	* 39600	30050	* 28550	20000	* 22550	14700	17900	11400	* 13450	10150	390
-1500	* 8150	* 8150	* 12150	* 12150	* 18500	13750	* 13600	9050	* 10700	6700	8250	5200	* 6950	4900	9490
-60	* 18100	* 18100	* 27450	* 27450	* 40100	29500	* 29500	19550	23000	14400	17750	11250	* 15350	10750	380
-3000	* 12900	* 12900	* 17750	* 17750	* 17700	13750	* 13300	9050	* 10400	6650			* 8400	5450	8770
-120	* 28850	* 28850	* 40150	* 40150	* 38350	29550	* 28700	19450	* 22400	14350			* 18500	12000	350
-4500	* 18500	* 18500	* 21900	* 21900	* 15800	13950	* 11950	9150	* 8950	6800			* 8550	6600	7690
-180	* 41600	* 41600	* 47250	* 47250	* 34000	30000	* 25650	19700	* 18850	14700			* 18850	14650	300
-6000					* 12000	* 12000	* 8500	* 8500					* 8350	* 8350	6060
-240					* 25300	* 25300							* 18250	* 18250	240

Illustration 220 g06297543

336: 6800 kg (14991 lb) counterweight, 6.5 m (21 ft 4 inch) reach boom, 3.9 m (12 ft 10 inch) stick, 800 mm (31 inch) heavy-duty TG track shoes.

(mm) (inch)	1500 60		3000 120		4500 180		6000 240		7500 300		9000 360				(mm) (inch)
9000													* 6200	* 6200	7350
360													* 13800	* 13800	290
7500									* 7750	* 7750			* 5800	* 5800	8540
300									* 17050	* 17050			* 12750	* 12750	340
6000									* 8050	7950	* 7500	5850	* 5600	5500	9340
240									* 17600	17050	* 14450	12550	* 12350	12200	370
4500							* 9800	* 9800	* 8800	7700	* 8250	5750	* 5650	4950	9840
180							* 21250	* 21250	* 19150	16550	* 18000	12350	* 12400	10950	390
3000					* 15400	* 15400	* 11650	10250	* 9800	7400	8650	5600	* 5800	4650	10100
120					* 33100	* 33100	* 25200	22100	* 21250	15900	18600	12050	* 12750	10250	400
1500					* 18600	14600	* 13400	9700	* 10800	7100	8450	5450	* 6150	4550	10130
60					* 40050	31400	* 28950	20900	* 23400	15250	18200	11700	* 13500	10000	400
0			* 8250	* 8250	* 20250	13950	* 14600	9300	10850	6850	8300	5300	* 6700	4600	9930
0			* 18750	* 18750	* 43800	30050	* 31650	20000	23350	14700	17900	11400	* 14750	10150	390
-1500	* 8650	* 8650	* 12900	* 12900	* 20500	13750	14950	9050	10700	6700	8250	5200	* 7600	4900	9490
-60	* 19250	* 19250	* 29150	* 29150	* 44400	29500	32150	19550	23000	14400	17750	11250	* 16800	10750	380
-3000	* 13650	* 13650	* 18800	* 18800	* 19650	13750	* 14750	9050	10650	6650			8600	5450	8770
-120	* 30550	* 30550	* 42550	* 42550	* 42500	29550	* 31850	19450	22950	14350			19000	12000	350
-4500	* 19600	* 19600	* 24300	* 24300	* 17500	13950	* 13300	9150	* 10000	6800			* 9550	6600	7690
-180	* 44050	* 44050	* 52400	* 52400	* 37750	30000	* 28500	19700	* 21000	14700			* 21000	14650	300
-6000					* 13400	* 13400	* 9500	* 9500					* 9300	* 9300	6060
-240					* 28200	* 28200							* 20400	* 20400	240

Illustration 221 g06297547

336: 6800 kg (14991 lb) counterweight, 6.5 m (21 ft 4 inch) reach boom, 3.9 m (12 ft 10 inch) stick, 800 mm (31 inch) heavy-duty TG track shoes heavy lift ON.

(mm) (inch)	1500 60		3000 120		4500 180		6000 240		7500 300		9000 360				(mm) (inch)
9000													* 5650	* 5650	7350
360													* 12600	* 12600	290
7500									* 7000	* 7000			* 5250	* 5250	8540
300									* 15400	* 15400			* 11650	* 11650	340
6000									* 7250	* 7250	* 6850	5700	* 5100	* 5100	9340
240									* 15900	* 15900	* 13150	12200	* 11250	* 11250	370
4500							* 8900	* 8900	* 7950	7500	* 7400	5600	* 5150	4800	9840
180							* 19250	* 19250	* 17300	16100	* 16200	12000	* 11250	10600	390
3000					* 13950	* 13950	* 10550	9950	* 8850	7150	* 7850	5450	* 5300	4500	10100
120					* 29950	* 29950	* 22800	21450	* 19200	15450	* 17150	11650	* 11600	9950	400
1500					* 16800	14150	* 12100	9400	* 9750	6850	8200	5250	* 5600	4400	10130
60					* 36250	30500	* 26150	20250	* 21100	14750	17650	11300	* 12300	9650	400
0			* 7750	* 7750	* 18300	13550	* 13200	9000	* 10400	6600	8050	5100	* 6100	4450	9930
0			* 17650	* 17650	* 39600	29150	* 28550	19400	* 22550	14250	17300	11000	* 13450	9800	390
-1500	* 8150	* 8150	* 12150	* 12150	* 18500	13300	* 13600	8800	10350	6450	7950	5050	* 6950	4700	9490
-60	* 18100	* 18100	* 27450	* 27450	* 40100	28600	* 29500	18900	22250	13950	17150	10850	* 15350	10400	380
-3000	* 12900	* 12900	* 17750	* 17750	* 17700	13300	* 13300	8750	10300	6450			8300	5250	8770
-120	* 28850	* 28850	* 40150	* 40150	* 38350	28650	* 28700	18800	22200	13850			18350	11650	350
-4500	* 18500	* 18500	* 21900	* 21900	* 15800	13550	* 11950	8850	* 8950	6550			* 8550	6400	7690
-180	* 41600	* 41600	* 47250	* 47250	* 34000	29100	* 25650	19100	* 18850	14200			* 18850	14200	300
-6000					* 12000	* 12000	* 8500	* 8500					* 8350	* 8350	6060
-240					* 25300	* 25300							* 18250	* 18250	240

Illustration 222 g06297554

336: 6800 kg (14991 lb) counterweight, 6.5 m (21 ft 4 inch) reach boom, 3.9 m (12 ft 10 inch) stick, 700 mm (28 inch) TG track shoes.

(mm) (inch)	1500 60		3000 120		4500 180		6000 240		7500 300		9000 360				(mm) (inch)
9000													* 6200	* 6200	7350
360													* 13800	* 13800	290
7500									* 7750	* 7750			* 5800	* 5800	8540
300									* 17050	16800			* 12750	* 12750	340
6000									* 8050	7750	* 7500	5700	* 5600	5350	9340
240									* 17600	16600	* 14450	12200	* 12350	11800	370
4500							* 9800	* 9800	* 8800	7500	* 8250	5600	* 5650	4800	9840
180							* 21250	* 21250	* 19150	16100	* 18000	12000	* 12400	10600	390
3000					* 15400	15250	* 11650	9950	* 9800	7150	8400	5450	* 5800	4500	10100
120					* 33100	32900	* 25200	21450	* 21250	15450	18000	11650	* 12750	9950	400
1500					* 18600	14150	* 13400	9400	10800	6850	8200	5250	* 6150	4400	10130
60					* 40050	30500	* 28950	20250	23200	14750	17650	11300	* 13500	9650	400
0			* 8250	* 8250	* 20250	13550	* 14600	9000	10500	6600	8050	5100	* 6700	4450	9930
0			* 18750	* 18750	* 43800	29150	* 31650	19400	22600	14250	17300	11000	* 14750	9800	390
-1500	* 8650	* 8650	* 12900	* 12900	* 20500	13300	14500	8800	10350	6450	7950	5050	7400	4700	9490
-60	* 19250	* 19250	* 29150	* 29150	* 44400	28600	31150	18900	22250	13950	17150	10850	16350	10400	380
-3000	* 13650	* 13650	* 18800	* 18800	* 19650	13300	14450	8750	10300	6450			8300	5250	8770
-120	* 30550	* 30550	* 42550	* 42550	* 42500	28650	31000	18800	22200	13850			18350	11650	350
-4500	* 19600	* 19600	* 24300	* 24300	* 17500	13550	* 13300	8850	* 10000	6550			* 9550	6400	7690
-180	* 44050	* 44050	* 52400	* 52400	* 37750	29100	* 28500	19100	* 21000	14200			* 21000	14200	300
-6000					* 13400	* 13400	* 9500	9250					* 9300	9150	6060
-240					* 28200	* 28200							* 20400	* 20400	240

Illustration 223 g06297559

336: 6800 kg (14991 lb) counterweight, 6.5 m (21 ft 4 inch) reach boom, 3.9 m (12 ft 10 inch) stick, 700 mm (28 inch) TG track shoes heavy lift ON.

(mm) (inch)	1500 60		3000 120		4500 180		6000 240		7500 300		9000 360				(mm) (inch)
9000													* 5650	* 5650	7350
360													* 12600	* 12600	290
7500									* 7000	* 7000			* 5250	* 5250	8540
300									* 15400	* 15400			* 11650	* 11650	340
6000									* 7250	* 7250	* 6850	5750	* 5100	* 5100	9340
240									* 15900	* 15900	* 13150	12300	* 11250	* 11250	370
4500							* 8900	* 8900	* 7950	7550	* 7400	5650	* 5150	4850	9840
180							* 19250	* 19250	* 17300	16250	* 16200	12100	* 11250	10700	390
3000					* 13950	* 13950	* 10550	10050	* 8850	7250	* 7850	5500	* 5300	4550	10100
120					* 29950	* 29950	* 22800	21650	* 19200	15600	* 17150	11800	* 11600	10050	400
1500					* 16800	14300	* 12100	9500	* 9750	6950	8300	5300	* 5600	4450	10130
60					* 36250	30800	* 26150	20450	* 21100	14900	17800	11450	* 12300	9800	400
0			* 7750	* 7750	* 18300	13700	* 13200	9100	* 10400	6700	8150	5200	* 6100	4500	9930
0			* 17650	* 17650	* 39600	29450	* 28550	19600	* 22550	14400	17500	11150	* 13450	9900	390
-1500	* 8150	* 8150	* 12150	* 12150	* 18500	13450	* 13600	8900	10450	6550	8050	5100	* 6950	4750	9490
-60	* 18100	* 18100	* 27450	* 27450	* 40100	28900	* 29500	19100	22500	14100	17350	11000	* 15350	10500	380
-3000	* 12900	* 12900	* 17750	* 17750	* 17700	13450	* 13300	8850	* 10400	6500			* 8400	5300	8770
-120	* 28850	* 28850	* 40150	* 40150	* 38350	28950	* 28700	19000	* 22400	14000			* 18500	11750	350
-4500	* 18500	* 18500	* 21900	* 21900	* 15800	13650	* 11950	8950	* 8950	6650			* 8550	6450	7690
-180	* 41600	* 41600	* 47250	* 47250	* 34000	29400	* 25650	19300	* 18850	14350			* 18850	14350	300
-6000					* 12000	* 12000	* 8500	* 8500					* 8350	* 8350	6060
-240					* 25300	* 25300							* 18250	* 18250	240

Illustration 224 g06297564

336: 6800 kg (14991 lb) counterweight, 6.5 m (21 ft 4 inch) reach boom, 3.9 m (12 ft 10 inch) stick, 600 mm (24 inch) DG track shoes.

(mm) (inch)	1500 60		3000 120		4500 180		6000 240		7500 300		9000 360				(mm) (inch)
9000													* 6200	* 6200	7350
360													* 13800	* 13800	290
7500									* 7750	* 7750			* 5800	* 5800	8540
300									* 17050	16950			* 12750	* 12750	340
6000									* 8050	7800	* 7500	5750	* 5600	5400	9340
240									* 17600	16750	* 14450	12300	* 12350	11950	370
4500							* 9800	* 9800	* 8800	7550	* 8250	5650	* 5650	4850	9840
180							* 21250	* 21250	* 19150	16250	* 18000	12100	* 12400	10700	390
3000					* 15400	* 15400	* 11650	10050	* 9800	7250	8450	5500	* 5800	4550	10100
120					* 33100	* 33100	* 25200	21650	* 21250	15600	18200	11800	* 12750	10050	400
1500					* 18600	14300	* 13400	9500	* 10800	6950	8300	5300	* 6150	4450	10130
60					* 40050	30800	* 28950	20450	* 23400	14900	17800	11450	* 13500	9800	400
0			* 8250	* 8250	* 20250	13700	* 14600	9100	10600	6700	8150	5200	* 6700	4500	9930
0			* 18750	* 18750	* 43800	29450	* 31650	19600	22850	14400	17500	11150	* 14750	9900	390
-1500	* 8650	* 8650	* 12900	* 12900	* 20500	13450	14650	8900	10450	6550	8050	5100	7500	4750	9490
-60	* 19250	* 19250	* 29150	* 29150	* 44400	28900	31450	19100	22500	14100	17350	11000	16500	10500	380
-3000	* 13650	* 13650	* 18800	* 18800	* 19650	13450	14600	8850	10450	6500			8400	5300	8770
-120	* 30550	* 30550	* 42550	* 42550	* 42500	28950	31350	19000	22450	14000			18550	11750	350
-4500	* 19600	* 19600	* 24300	* 24300	* 17500	13650	* 13300	8950	* 10000	6650			* 9550	6450	7690
-180	* 44050	* 44050	* 52400	* 52400	* 37750	29400	* 28500	19300	* 21000	14350			* 21000	14350	300
-6000					* 13400	* 13400	* 9500	9350					* 9300	9200	6060
-240					* 28200	* 28200							* 20400	* 20400	240

Illustration 225 g06297567

336: 6800 kg (14991 lb) counterweight, 6.5 m (21 ft 4 inch) reach boom, 3.9 m (12 ft 10 inch) stick, 600 mm (24 inch) DG track shoes heavy lift ON.

7560 kg (16667 lb) Counterweight

6.18 m (20 ft 3 inch) Mass Boom

2.55 m (8 ft 4 inch) Stick

(mm) (inch)	1500 60		3000 120		4500 180		6000 240		7500 300				
kg / Lb													(mm) (inch)
7500							* 9150	* 9150			* 8200	* 8200	6580
300							* 20250	* 20250			* 18200	* 18200	260
6000							* 9500	* 9500	* 8950	7750	* 7850	7550	7600
240							* 20650	* 20650			* 17250	16850	300
4500					* 13300	* 13300	* 10550	* 10550	* 9200	7600	* 7800	6550	8210
180					* 28550	* 28550	* 22800	* 22800	* 20100	16300	* 17200	14450	330
3000					* 16250	15300	* 11850	10150	* 9800	7300	* 8100	6050	8520
120					* 34900	33000	* 25650	21850	* 21300	15750	* 17850	13300	340
1500					* 18050	14450	* 12950	9650	* 10350	7100	* 8750	5850	8550
60					* 38950	31150	* 28000	20850	* 22400	15250	* 19250	12900	340
0					* 18200	14200	* 13400	9400	* 10550	6900	* 9350	6050	8310
0					* 39500	30500	* 29050	20250	* 22800	14900	* 20600	13250	330
-1500			* 16800	* 16800	* 17300	14200	* 13050	9350	* 10050	6900	* 9500	6600	7780
-60			* 38150	* 38150	* 37500	30550	* 28250	20100	* 21600	14900	* 20950	14550	310
-3000			* 19750	* 19750	* 15200	14400	* 11550	9450			* 9500	7900	6880
-120			* 42950	* 42950	* 32900	31000	* 24850	20400			* 20950	17550	270
-4500					* 11150	* 11150					* 8800	* 8800	5430
-180					* 23500	* 23500					* 19150	* 19150	210

Illustration 226 g06282292

336: 7560 kg (16667 lb) counterweight, 6.18 m (20 ft 3 inch) mass boom, 2.55 m (8 ft 4 inch) stick, 800 mm (31 inch) TG track shoes.

(mm) (inch)	1500 60		3000 120		4500 180		6000 240		7500 300				
kg / Lb													(mm) (inch)
7500							* 10150	* 10150			* 9000	* 9000	6580
300							* 22350	* 22350			* 19900	* 19900	260
6000							* 10500	* 10500	* 9800	7750	* 8550	7550	7600
240							* 22850	* 22850			* 18850	16850	300
4500					* 14650	* 14650	* 11650	10700	* 10200	7600	* 8550	6550	8210
180					* 31550	* 31550	* 25250	23000	* 22300	16300	* 18800	14450	330
3000					* 18000	15300	* 13150	10150	* 10900	7300	* 8900	6050	8520
120					* 38650	33000	* 28450	21850	* 23650	15750	* 19500	13300	340
1500					* 20000	14450	* 14350	9650	11200	7100	9200	5850	8550
60					* 43150	31150	* 31050	20850	24100	15250	20300	12900	340
0					* 20200	14200	* 14900	9400	11000	6900	9500	6050	8310
0					* 43800	30500	* 32250	20250	23700	14900	20950	13250	330
-1500			* 17800	* 17800	* 19200	14200	* 14500	9350	11000	6900	10450	6600	7780
-60			* 40400	* 40400	* 41600	30550	* 31400	20100	23700	14900	23100	14550	310
-3000			* 22000	* 22000	* 16950	14400	* 12900	9450			* 10600	7900	6880
-120			* 47800	* 47800	* 36600	31000	* 27650	20400			* 23350	17550	270
-4500					* 12450	* 12450					* 9850	* 9850	5430
-180					* 26300	* 26300					* 21500	* 21500	210

Illustration 227 g06282294

336: 7560 kg (16667 lb) counterweight, 6.18 m (20 ft 3 inch) mass boom, 2.55 m (8 ft 4 inch) stick, 800 mm (31 inch) TG track shoes heavy lift ON.

(mm) (inch)	1500 60		3000 120		4500 180		6000 240		7500 300				
kg / Lb													(mm) (inch)
7500							* 9150	* 9150			* 8200	* 8200	6580
300							* 20250	* 20250			* 18200	* 18200	260
6000							* 9500	* 9500	* 8950	7850	* 7850	7650	7600
240							* 20650	* 20650			* 17250	17100	300
4500					* 13300	* 13300	* 10550	* 10550	* 9200	7700	* 7800	6650	8210
180					* 28550	* 28550	* 22800	* 22800	* 20100	16500	* 17200	14650	330
3000					* 16250	15500	* 11850	10250	* 9800	7400	* 8100	6100	8520
120					* 34900	33450	* 25650	22150	* 21300	16000	* 17850	13500	340
1500					* 18050	14650	* 12950	9800	* 10350	7200	* 8750	5950	8550
60					* 38950	31600	* 28000	21100	* 22400	15450	* 19250	13100	340
0					* 18200	14400	* 13400	9550	* 10550	7050	* 9350	6100	8310
0					* 39500	30950	* 29050	20550	* 22800	15150	* 20600	13450	330
-1500			* 16800	* 16800	* 17300	14400	* 13050	9450	* 10050	7000	* 9500	6700	7780
-60			* 38150	* 38150	* 37500	30950	* 28250	20400	* 21600	15100	* 20950	14750	310
-3000			* 19750	* 19750	* 15200	14600	* 11550	9600			* 9500	8000	6880
-120			* 42950	* 42950	* 32900	31450	* 24850	20700			* 20950	17800	270
-4500					* 11150	* 11150					* 8800	* 8800	5430
-180					* 23500	* 23500					* 19150	* 19150	210

Illustration 228 g06282297

336: 7560 kg (16667 lb) counterweight, 6.18 m (20 ft 3 inch) mass boom, 2.55 m (8 ft 4 inch) stick, 800 mm (31 inch) heavy-duty TG track shoes.

(mm) (inch)	1500 60		3000 120		4500 180		6000 240		7500 300				
kg / Lb													(mm) (inch)
7500							* 10150	* 10150			* 9000	* 9000	6580
300							* 22350	* 22350			* 19900	* 19900	260
6000							* 10500	* 10500	* 9800	7850	* 8550	7650	7600
240							* 22850	* 22850			* 18850	17100	300
4500					* 14650	* 14650	* 11650	10800	* 10200	7700	* 8550	6650	8210
180					* 31550	* 31550	* 25250	23300	* 22300	16500	* 18800	14650	330
3000					* 18000	15500	* 13150	10250	* 10900	7400	* 8900	6100	8520
120					* 38650	33450	* 28450	22150	* 23650	16000	* 19500	13500	340
1500					* 20000	14650	* 14350	9800	11350	7200	9350	5950	8550
60					* 43150	31600	* 31050	21100	24450	15450	20600	13100	340
0					* 20200	14400	* 14900	9550	11200	7050	9650	6100	8310
0					* 43800	30950	* 32250	20550	24050	15150	21250	13450	330
-1500			* 17800	* 17800	* 19200	14400	* 14500	9450	11150	7000	* 10600	6700	7780
-60			* 40400	* 40400	* 41600	30950	* 31400	20400	24050	15100	* 23350	14750	310
-3000			* 22000	* 22000	* 16950	14600	* 12900	9600			* 10600	8000	6880
-120			* 47800	* 47800	* 36600	31450	* 27650	20700			* 23350	17800	270
-4500					* 12450	* 12450					* 9850	* 9850	5430
-180					* 26300	* 26300					* 21500	* 21500	210

Illustration 229 g06282298

336: 7560 kg (16667 lb) counterweight, 6.18 m (20 ft 3 inch) mass boom, 2.55 m (8 ft 4 inch) stick, 800 mm (31 inch) heavy-duty TG track shoes heavy lift ON.

(mm) (inch)	1500 60		3000 120		4500 180		6000 240		7500 300				
kg / Lb													(mm) (inch)
7500							* 9150	* 9150			* 8200	* 8200	6580
300							* 20250	* 20250			* 18200	* 18200	260
6000							* 9500	* 9500	* 8950	7600	* 7850	7450	7600
240							* 20650	* 20650			* 17250	16600	300
4500					* 13300	* 13300	* 10550	10550	* 9200	7450	* 7800	6450	8210
180					* 28550	* 28550	* 22800	22700	* 20100	16050	* 17200	14250	330
3000					* 16250	15100	* 11850	10000	* 9800	7200	* 8100	5950	8520
120					* 34900	32550	* 25650	21500	* 21300	15500	* 17850	13100	340
1500					* 18050	14250	* 12950	9500	* 10350	6950	* 8750	5800	8550
60					* 38950	30700	* 28000	20500	* 22400	15000	* 19250	12700	340
0					* 18200	13950	* 13400	9250	* 10550	6800	* 9350	5950	8310
0					* 39500	30050	* 29050	19900	* 22800	14650	* 20600	13050	330
-1500			* 16800	* 16800	* 17300	14000	* 13050	9200	* 10050	6800	* 9500	6500	7780
-60			* 38150	* 38150	* 37500	30050	* 28250	19750	* 21600	14650	* 20950	14300	310
-3000			* 19750	* 19750	* 15200	14200	* 11550	9300			* 9500	7800	6880
-120			* 42950	* 42950	* 32900	30550	* 24850	20100			* 20950	17250	270
-4500					* 11150	* 11150					* 8800	* 8800	5430
-180					* 23500	* 23500					* 19150	* 19150	210

Illustration 230 g06282289

336: 7560 kg (16667 lb) counterweight, 6.18 m (20 ft 3 inch) mass boom, 2.55 m (8 ft 4 inch) stick, 700 mm (28 inch) TG track shoes.

(mm) (inch)	1500 60		3000 120		4500 180		6000 240		7500 300				
kg / Lb													(mm) (inch)
7500							* 10150	* 10150			* 9000	* 9000	6580
300							* 22350	* 22350			* 19900	* 19900	260
6000							* 10500	* 10500	* 9800	7600	* 8550	7450	7600
240							* 22850	* 22850			* 18850	16600	300
4500					* 14650	* 14650	* 11650	10550	* 10200	7450	* 8550	6450	8210
180					* 31550	* 31550	* 25250	22700	* 22300	16050	* 18800	14250	330
3000					* 18000	15100	* 13150	10000	* 10900	7200	* 8900	5950	8520
120					* 38650	32550	* 28450	21500	* 23650	15500	* 19500	13100	340
1500					* 20000	14250	* 14350	9500	11000	6950	9050	5800	8550
60					* 43150	30700	* 31050	20500	23700	15000	19950	12700	340
0					* 20200	13950	* 14900	9250	10850	6800	9350	5950	8310
0					* 43800	30050	* 32250	19900	23300	14650	20600	13050	330
-1500			* 17800	* 17800	* 19200	14000	* 14500	9200	10800	6800	10300	6500	7780
-60			* 40400	* 40400	* 41600	30050	* 31400	19750	23300	14650	22700	14300	310
-3000			* 22000	* 22000	* 16950	14200	* 12900	9300			* 10600	7800	6880
-120			* 47800	* 47800	* 36600	30550	* 27650	20100			* 23350	17250	270
-4500					* 12450	* 12450					* 9850	* 9850	5430
-180					* 26300	* 26300					* 21500	* 21500	210

Illustration 231 g06282291

336: 7560 kg (16667 lb) counterweight, 6.18 m (20 ft 3 inch) mass boom, 2.55 m (8 ft 4 inch) stick, 700 mm (28 inch) TG track shoes heavy lift ON.

(mm) (inch)	1500 60		3000 120		4500 180		6000 240		7500 300				
kg / Lb													(mm) (inch)
7500							* 9150	* 9150			* 8200	* 8200	6580
300							* 20250	* 20250			* 18200	* 18200	260
6000							* 9500	* 9500	* 8950	7700	* 7850	7500	7600
240							* 20650	* 20650			* 17250	16750	300
4500					* 13300	* 13300	* 10550	* 10550	* 9200	7550	* 7800	6500	8210
180					* 28550	* 28550	* 22800	* 22800	* 20100	16200	* 17200	14400	330
3000					* 16250	15200	* 11850	10050	* 9800	7300	* 8100	6000	8520
120					* 34900	32850	* 25650	21700	* 21300	15650	* 17850	13200	340
1500					* 18050	14400	* 12950	9600	* 10350	7050	* 8750	5850	8550
60					* 38950	31000	* 28000	20700	* 22400	15150	* 19250	12850	340
0					* 18200	14100	* 13400	9350	* 10550	6900	* 9350	6000	8310
0					* 39500	30350	* 29050	20100	* 22800	14800	* 20600	13200	330
-1500			* 16800	* 16800	* 17300	14100	* 13050	9250	* 10050	6850	* 9500	6550	7780
-60			* 38150	* 38150	* 37500	30350	* 28250	19950	* 21600	14800	* 20950	14450	310
-3000			* 19750	* 19750	* 15200	14350	* 11550	9400			* 9500	7850	6880
-120			* 42950	* 42950	* 32900	30850	* 24850	20300			* 20950	17450	270
-4500					* 11150	* 11150					* 8800	* 8800	5430
-180					* 23500	* 23500					* 19150	* 19150	210

Illustration 232 g06282295

336: 7560 kg (16667 lb) counterweight, 6.18 m (20 ft 3 inch) mass boom, 2.55 m (8 ft 4 inch) stick, 600 mm (24 inch) DG track shoes.

(mm) (inch)	1500 60		3000 120		4500 180		6000 240		7500 300				
kg / Lb													(mm) (inch)
7500							* 10150	* 10150			* 9000	* 9000	6580
300							* 22350	* 22350			* 19900	* 19900	260
6000							* 10500	* 10500	* 9800	7700	* 8550	7500	7600
240							* 22850	* 22850			* 18850	16750	300
4500					* 14650	* 14650	* 11650	10650	* 10200	7550	* 8550	6500	8210
180					* 31550	* 31550	* 25250	22900	* 22300	16200	* 18800	14400	330
3000					* 18000	15200	* 13150	10050	* 10900	7300	* 8900	6000	8520
120					* 38650	32850	* 28450	21700	* 23650	15650	* 19500	13200	340
1500					* 20000	14400	* 14350	9600	11100	7050	9150	5850	8550
60					* 43150	31000	* 31050	20700	23950	15150	20150	12850	340
0					* 20200	14100	* 14900	9350	10950	6900	9450	6000	8310
0					* 43800	30350	* 32250	20100	23550	14800	20800	13200	330
-1500			* 17800	* 17800	* 19200	14100	* 14500	9250	10950	6850	10400	6550	7780
-60			* 40400	* 40400	* 41600	30350	* 31400	19950	23550	14800	22950	14450	310
-3000			* 22000	* 22000	* 16950	14350	* 12900	9400			* 10600	7850	6880
-120			* 47800	* 47800	* 36600	30850	* 27650	20300			* 23350	17450	270
-4500					* 12450	* 12450					* 9850	* 9850	5430
-180					* 26300	* 26300					* 21500	* 21500	210

Illustration 233 g06282296

336: 7560 kg (16667 lb) counterweight, 6.18 m (20 ft 3 inch) mass boom, 2.55 m (8 ft 4 inch) stick, 600 mm (24 inch) DG track shoes heavy lift ON.

6.5 m (21 ft 4 inch) Reach Boom

2.8 m (9 ft 2 inch) Stick

(mm) (inch)	1500 60		3000 120		4500 180		6000 240		7500 300		9000 360				
kg / Lb															(mm) (inch)
7500													* 8550	8400	7340
300													* 18950	18900	290
6000							* 9200	* 9200	* 8550	8100			* 8200	6900	8250
240							* 20000	* 20000	* 18750	17400			* 18100	15400	330
4500					* 13300	* 13300	* 10450	* 10450	* 9100	7900			* 8200	6150	8820
180					* 28500	* 28500	* 22600	* 22600	* 19750	17000			* 18100	13550	350
3000					* 16500	15650	* 11950	10450	* 9800	7650	* 8700	5850	* 8500	5750	9110
120					* 35450	33800	* 25800	22550	* 21300	16450			* 18650	12650	360
1500					* 15950	14900	* 13200	10000	* 10500	7400	8800	5750	8600	5600	9140
60					* 38800	32100	* 28500	21600	* 22750	15950			18950	12350	360
0					* 18750	14650	* 13800	9750	* 10900	7250			8850	5750	8920
0					* 40750	31500	* 29850	21000	* 23550	15550			19500	12650	350
-1500			* 12400	* 12400	* 18100	14650	* 13650	9650	* 10750	7150			* 9250	6200	8420
-60			* 28200	* 28200	* 39250	31450	* 29600	20800	* 23200	15450			* 20350	13650	340
-3000			* 21650	* 21650	* 16450	14800	* 12650	9750	* 9600	7250			* 9350	7150	7600
-120			* 47050	* 47050	* 35650	31800	* 27300	21000					* 20600	15850	300
-4500			* 17250	* 17250	* 13400	* 13400	* 10000	* 10000					* 9100	* 9100	6330
-180			* 37150	* 37150	* 28700	* 28700	* 20950	* 20950					* 20000	* 20000	250

Illustration 234 g06281885

336: 7560 kg (16667 lb) counterweight, 6.5 m (21 ft 4 inch) reach boom, 2.8 m (9 ft 2 inch) stick, 800 mm (31 inch) TG track shoes.

(mm) (inch)	1500 60		3000 120		4500 180		6000 240		7500 300		9000 360				
kg / Lb															(mm) (inch)
7500													* 9350	8400	7340
300													* 20650	18900	290
6000							* 10150	* 10150	* 9450	8100			* 9000	6900	8250
240							* 22050	* 22050	* 20700	17400			* 19800	15400	330
4500					* 14650	* 14650	* 11550	11000	* 10050	7900			* 9000	6150	8820
180					* 31400	* 31400	* 24950	23700	* 21850	17000			* 19750	13550	350
3000					* 18250	15650	* 13200	10450	* 10850	7650	8900	5850	8750	5750	9110
120					* 39150	33800	* 28500	22550	* 23600	16450			19300	12650	360
1500					* 16850	14900	* 14600	10000	11500	7400	8800	5750	8600	5600	9140
60					* 41100	32100	* 31500	21600	24700	15950			18950	12350	360
0					* 19850	14650	* 15250	9750	11300	7250			8850	5750	8920
0					* 45000	31500	* 33050	21000	24300	15550			19500	12650	350
-1500			* 13150	* 13150	* 20000	14650	* 15150	9650	11250	7150			9550	6200	8420
-60			* 29900	* 29900	* 43400	31450	* 32750	20800	24200	15450			21100	13650	340
-3000			* 23600	* 23600	* 18250	14800	* 14000	9750	* 10650	7250			* 10400	7150	7600
-120			* 52150	* 52150	* 39500	31800	* 30250	21000					* 22900	15850	300
-4500			* 19200	* 19200	* 14900	* 14900	* 11100	10000					* 10150	9350	6330
-180			* 41300	* 41300	* 31900	* 31900	* 23300	21650					* 22300	21000	250

Illustration 235 g06281888

336: 7560 kg (16667 lb) counterweight, 6.5 m (21 ft 4 inch) reach boom, 2.8 m (9 ft 2 inch) stick, 800 mm (31 inch) TG track shoes heavy lift ON.

(mm) (inch)	1500 60		3000 120		4500 180		6000 240		7500 300		9000 360				
kg / Lb															(mm) (inch)
7500													* 8550	8550	7340
300													* 18950	* 18950	290
6000							* 9200	* 9200	* 8550	8200			* 8200	7000	8250
240							* 20000	* 20000	* 18750	17600			* 18100	15600	330
4500					* 13300	* 13300	* 10450	* 10450	* 9100	8000			* 8200	6200	8820
180					* 28500	* 28500	* 22600	* 22600	* 19750	17200			* 18100	13750	350
3000					* 16500	15850	* 11950	10600	* 9800	7750	* 8700	5950	* 8500	5850	9110
120					* 35450	34250	* 25800	22850	* 21300	16650			* 18650	12850	360
1500					* 15950	15100	* 13200	10150	* 10500	7500	* 8950	5800	8750	5700	9140
60					* 38800	32500	* 28500	21900	* 22750	16150			19250	12550	360
0					* 18750	14850	* 13800	9900	* 10900	7350			9000	5850	8920
0					* 40750	31900	* 29850	21300	* 23550	15800			19750	12800	350
-1500			* 12400	* 12400	* 18100	14850	* 13650	9800	* 10750	7250			* 9250	6300	8420
-60			* 28200	* 28200	* 39250	31900	* 29600	21100	* 23200	15650			* 20350	13850	340
-3000			* 21650	* 21650	* 16450	15000	* 12650	9850	* 9600	7350			* 9350	7250	7600
-120			* 47050	* 47050	* 35650	32200	* 27300	21250					* 20600	16050	300
-4500			* 17250	* 17250	* 13400	* 13400	* 10000	* 10000					* 9100	* 9100	6330
-180			* 37150	* 37150	* 28700	* 28700	* 20950	* 20950					* 20000	* 20000	250

Illustration 236 g06281919

336: 7560 kg (16667 lb) counterweight, 6.5 m (21 ft 4 inch) reach boom, 2.8 m (9 ft 2 inch) stick, 800 mm (31 inch) heavy-duty TG track shoes.

(mm) (inch)	1500 60		3000 120		4500 180		6000 240		7500 300		9000 360				
kg / Lb															(mm) (inch)
7500													* 9350	8550	7340
300													* 20650	19150	290
6000							* 10150	* 10150	* 9450	8200			* 9000	7000	8250
240							* 22050	* 22050	* 20700	17600			* 19800	15600	330
4500					* 14650	* 14650	* 11550	11100	* 10050	8000			* 9000	6200	8820
180					* 31400	* 31400	* 24950	23950	* 21850	17200			* 19750	13750	350
3000					* 18250	15850	* 13200	10600	* 10850	7750	9050	5950	8900	5850	9110
120					* 39150	34250	* 28500	22850	* 23600	16650			19600	12850	360
1500					* 16850	15100	* 14600	10150	* 11600	7500	8950	5800	8750	5700	9140
60					* 41100	32500	* 31500	21900	25050	16150			19250	12550	360
0					* 19850	14850	* 15250	9900	11450	7350			9000	5850	8920
0					* 45000	31900	* 33050	21300	24700	15800			19750	12800	350
-1500			* 13150	* 13150	* 20000	14850	* 15150	9800	11400	7250			9700	6300	8420
-60			* 29900	* 29900	* 43400	31900	* 32750	21100	24550	15650			21400	13850	340
-3000			* 23600	* 23600	* 18250	15000	* 14000	9850	* 10650	7350			* 10400	7250	7600
-120			* 52150	* 52150	* 39500	32200	* 30250	21250					* 22900	16050	300
-4500			* 19200	* 19200	* 14900	* 14900	* 11100	10150					* 10150	9500	6330
-180			* 41300	* 41300	* 31900	* 31900	* 23300	21950					* 22300	21300	250

Illustration 237 g06281920

336: 7560 kg (16667 lb) counterweight, 6.5 m (21 ft 4 inch) reach boom, 2.8 m (9 ft 2 inch) stick, 800 mm (31 inch) heavy-duty TG track shoes heavy lift ON.

(mm) (inch)	1500 60		3000 120		4500 180		6000 240		7500 300		9000 360				
kg / Lb															(mm) (inch)
7500													* 8550	8300	7340
300													* 18950	18650	290
6000							* 9200	* 9200	* 8550	8000			* 8200	6800	8250
240							* 20000	* 20000	* 18750	17150			* 18100	15150	330
4500					* 13300	* 13300	* 10450	* 10450	* 9100	7800			* 8200	6050	8820
180					* 28500	* 28500	* 22600	* 22600	* 19750	16750			* 18100	13350	350
3000					* 16500	15450	* 11950	10300	* 9800	7500	* 8700	5750	* 8500	5650	9110
120					* 35450	33300	* 25800	22250	* 21300	16200			* 18650	12450	360
1500					* 15950	14650	* 13200	9850	* 10500	7300	8650	5650	8450	5550	9140
60					* 38800	31600	* 28500	21250	* 22750	15700			18650	12150	360
0					* 18750	14400	* 13800	9600	* 10900	7100			8700	5650	8920
0					* 40750	31000	* 29850	20700	* 23550	15350			19150	12450	350
-1500			* 12400	* 12400	* 18100	14400	* 13650	9500	* 10750	7050			* 9250	6100	8420
-60			* 28200	* 28200	* 39250	31000	* 29600	20500	* 23200	15200			* 20350	13400	340
-3000			* 21650	* 21650	* 16450	14550	* 12650	9600	* 9600	7150			* 9350	7050	7600
-120			* 47050	* 47050	* 35650	31300	* 27300	20650					* 20600	15600	300
-4500			* 17250	* 17250	* 13400	* 13400	* 10000	9850					* 9100	* 9100	6330
-180			* 37150	* 37150	* 28700	* 28700	* 20950	* 20950					* 20000	* 20000	250

Illustration 238 g06281878

336: 7560 kg (16667 lb) counterweight, 6.5 m (21 ft 4 inch) reach boom, 2.8 m (9 ft 2 inch) stick, 700 mm (28 inch) TG track shoes.

(mm) (inch)	1500 60		3000 120		4500 180		6000 240		7500 300		9000 360				
kg / Lb															(mm) (inch)
7500													* 9350	8300	7340
300													* 20650	18650	290
6000							* 10150	* 10150	* 9450	8000			* 9000	6800	8250
240							* 22050	* 22050	* 20700	17150			* 19800	15150	330
4500					* 14650	* 14650	* 11550	10850	* 10050	7800			* 9000	6050	8820
180					* 31400	* 31400	* 24950	23350	* 21850	16750			* 19750	13350	350
3000					* 18250	15450	* 13200	10300	* 10850	7500	8800	5750	8600	5650	9110
120					* 39150	33300	* 28500	22250	* 23600	16200			19000	12450	360
1500					* 16850	14650	* 14600	9850	11300	7300	8650	5650	8450	5550	9140
60					* 41100	31600	* 31500	21250	24350	15700			18650	12150	360
0					* 19850	14400	* 15250	9600	11100	7100			8700	5650	8920
0					* 45000	31000	* 33050	20700	23950	15350			19150	12450	350
-1500			* 13150	* 13150	* 20000	14400	* 15150	9500	11050	7050			9400	6100	8420
-60			* 29900	* 29900	* 43400	31000	* 32750	20500	23800	15200			20750	13400	340
-3000			* 23600	* 23600	* 18250	14550	* 14000	9600	* 10650	7150			* 10400	7050	7600
-120			* 52150	* 52150	* 39500	31300	* 30250	20650					* 22900	15600	300
-4500			* 19200	* 19200	* 14900	* 14900	* 11100	9850					* 10150	9250	6330
-180			* 41300	* 41300	* 31900	* 31900	* 23300	21350					* 22300	20700	250

Illustration 239 g06281880

336: 7560 kg (16667 lb) counterweight, 6.5 m (21 ft 4 inch) reach boom, 2.8 m (9 ft 2 inch) stick, 700 mm (28 inch) TG track shoes heavy lift ON.

(mm) (inch)	1500 60		3000 120		4500 180		6000 240		7500 300		9000 360				
kg / Lb															(mm) (inch)
7500													* 8550	8400	7340
300													* 18950	18800	290
6000							* 9200	* 9200	* 8550	8050			* 8200	6900	8250
240							* 20000	* 20000	* 18750	17300			* 18100	15300	330
4500					* 13300	* 13300	* 10450	* 10450	* 9100	7850			* 8200	6100	8820
180					* 28500	* 28500	* 22600	* 22600	* 19750	16900			* 18100	13500	350
3000					* 16500	15550	* 11950	10400	* 9800	7600	* 8700	5800	* 8500	5700	9110
120					* 35450	33600	* 25800	22450	* 21300	16350			* 18650	12600	360
1500					* 15950	14800	* 13200	9950	* 10500	7350	8750	5700	8550	5600	9140
60					* 38800	31900	* 28500	21450	* 22750	15850			18850	12300	360
0					* 18750	14550	* 13800	9700	* 10900	7200			8800	5700	8920
0					* 40750	31300	* 29850	20900	* 23550	15500			19350	12550	350
-1500			* 12400	* 12400	* 18100	14550	* 13650	9600	* 10750	7150			* 9250	6150	8420
-60			* 28200	* 28200	* 39250	31250	* 29600	20700	* 23200	15350			* 20350	13550	340
-3000			* 21650	* 21650	* 16450	14700	* 12650	9700	* 9600	7200			* 9350	7100	7600
-120			* 47050	* 47050	* 35650	31600	* 27300	20850					* 20600	15750	300
-4500			* 17250	* 17250	* 13400	* 13400	* 10000	9950					* 9100	* 9100	6330
-180			* 37150	* 37150	* 28700	* 28700	* 20950	* 20950					* 20000	* 20000	250

Illustration 240 g06281894

336: 7560 kg (16667 lb) counterweight, 6.5 m (21 ft 4 inch) reach boom, 2.8 m (9 ft 2 inch) stick, 600 mm (24 inch) DG track shoes.

(mm) (inch)	1500 60		3000 120		4500 180		6000 240		7500 300		9000 360				
kg / Lb															(mm) (inch)
7500													* 9350	8400	7340
300													* 20650	18800	290
6000							* 10150	* 10150	* 9450	8050			* 9000	6900	8250
240							* 22050	* 22050	* 20700	17300			* 19800	15300	330
4500					* 14650	* 14650	* 11550	10950	* 10050	7850			* 9000	6100	8820
180					* 31400	* 31400	* 24950	23550	* 21850	16900			* 19750	13500	350
3000					* 18250	15550	* 13200	10400	* 10850	7600	8850	5800	8700	5700	9110
120					* 39150	33600	* 28500	22450	* 23600	16350			19200	12600	360
1500					* 16850	14800	* 14600	9950	11400	7350	8750	5700	8550	5600	9140
60					* 41100	31900	* 31500	21450	24550	15850			18850	12300	360
0					* 19850	14550	* 15250	9700	11250	7200			8800	5700	8920
0					* 45000	31300	* 33050	20900	24150	15500			19350	12550	350
-1500			* 13150	* 13150	* 20000	14550	* 15150	9600	11150	7150			9500	6150	8420
-60			* 29900	* 29900	* 43400	31250	* 32750	20700	24050	15350			21000	13550	340
-3000			* 23600	* 23600	* 18250	14700	* 14000	9700	* 10650	7200			* 10400	7100	7600
-120			* 52150	* 52150	* 39500	31600	* 30250	20850					* 22900	15750	300
-4500			* 19200	* 19200	* 14900	* 14900	* 11100	9950					* 10150	9300	6330
-180			* 41300	* 41300	* 31900	* 31900	* 23300	21550					* 22300	20900	250

Illustration 241 g06281897

336: 7560 kg (16667 lb) counterweight, 6.5 m (21 ft 4 inch) reach boom, 2.8 m (9 ft 2 inch) stick, 600 mm (24 inch) DG track shoes heavy lift ON.

6.5 m (21 ft 4 inch) Extreme Service Reach Boom

2.8 m (9 ft 2 inch) Extreme Service Stick

(mm) (inch)	1500 60		3000 120		4500 180		6000 240		7500 300		9000				(mm) (inch)
7500													* 8500	8350	7340
300													* 18750	* 18750	290
6000							* 9100	* 9100	* 8400	8000			* 8200	6850	8250
240							* 19750	* 19750	* 18450	17200			* 18050	15200	330
4500					* 13100	* 13100	* 10300	* 10300	* 8950	7800			* 8200	6050	8820
180					* 28150	* 28150	* 22300	* 22300	* 19450	16800			* 18000	13350	350
3000					* 16300	15500	* 11750	10350	* 9650	7550	* 8550	5750	* 8450	5650	9110
120					* 34950	33450	* 25400	22300	* 20950	16200			* 18600	12400	360
1500					* 15900	14650	* 13000	9850	* 10300	7250	8700	5650	8500	5500	9140
60					* 38700	31600	* 28050	21250	* 22350	15650			18750	12100	360
0					* 18500	14400	* 13550	9600	* 10700	7100			8750	5650	8920
0					* 40100	30950	* 29400	20650	* 23150	15250			19250	12350	350
-1500			* 12350	* 12350	* 17800	14400	* 13450	9500	* 10550	7050			* 9050	6050	8420
-60			* 28100	* 28100	* 38600	30950	* 29100	20450	* 22800	15150			* 19950	13350	340
-3000			* 21250	* 21250	* 16200	14550	* 12450	9550	* 9400	7150			* 9200	7000	7600
-120			* 46200	* 46200	* 35050	31300	* 26800	20600					* 20200	15550	300
-4500			* 16900	* 16900	* 13150	* 13150	* 9800	* 9800					* 8950	* 8950	6330
-180			* 36350	* 36350	* 28150	* 28150	* 20500	* 20500					* 19600	* 19600	250

Illustration 242 g06282362

336: 7560 kg (16667 lb) counterweight, 6.5 m (21 ft 4 inch) extreme service reach boom, 2.8 m (9 ft 2 inch) extreme service stick, 800 mm (31 inch) TG track shoes.

(mm) (inch)	1500 60		3000 120		4500 180		6000 240		7500 300		9000				(mm) (inch)
7500													* 9300	8350	7340
300													* 20550	18750	290
6000							* 10000	* 10000	* 9300	8000			* 8950	6850	8250
240							* 21800	* 21800	* 20400	17200			* 19700	15200	330
4500					* 14450	* 14450	* 11400	10900	* 9900	7800			* 8950	6050	8820
180					* 31050	* 31050	* 24650	23500	* 21550	16800			* 19650	13350	350
3000					* 18000	15500	* 13000	10350	* 10700	7550	8850	5750	8650	5650	9110
120					* 38650	33450	* 28150	22300	* 23250	16200			19100	12400	360
1500					* 16850	14650	* 14350	9850	11400	7250	8700	5650	8500	5500	9140
60					* 41000	31600	* 31050	21250	24500	15650			18750	12100	360
0					* 19800	14400	* 15050	9600	11200	7100			8750	5650	8920
0					* 44400	30950	* 32550	20650	24050	15250			19250	12350	350
-1500			* 13100	* 13100	* 19700	14400	* 14900	9500	11100	7050			9450	6050	8420
-60			* 29800	* 29800	* 42800	30950	* 32300	20450	23900	15150			20850	13350	340
-3000			* 23600	* 23600	* 17950	14550	* 13800	9550	* 10450	7150			* 10200	7000	7600
-120			* 51300	* 51300	* 38850	31300	* 29800	20600					* 22500	15550	300
-4500			* 18850	* 18850	* 14650	* 14650	* 10900	9850					* 9950	9250	6330
-180			* 40550	* 40550	* 31350	* 31350	* 22850	21350					* 21850	20700	250

Illustration 243 g06282363

336: 7560 kg (16667 lb) counterweight, 6.5 m (21 ft 4 inch) extreme service reach boom, 2.8 m (9 ft 2 inch) extreme service stick, 800 mm (31 inch) TG track shoes heavy lift ON.

(mm) (inch)	1500 60		3000 120		4500 180		6000 240		7500 300		9000				
kg / Lb															(mm) (inch)
7500													* 8500	8450	7340
300													* 18750	* 18750	290
6000							* 9100	* 9100	* 8400	8100			* 8200	6900	8250
240							* 19750	* 19750	* 18450	17450			* 18050	15400	330
4500					* 13100	* 13100	* 10300	* 10300	* 8950	7900			* 8200	6100	8820
180					* 28150	* 28150	* 22300	* 22300	* 19450	17000			* 18000	13550	350
3000					* 16300	15700	* 11750	10450	* 9650	7650	* 8550	5800	* 8450	5700	9110
120					* 34950	33850	* 25400	22600	* 20950	16450			* 18600	12600	360
1500					* 15900	14850	* 13000	10000	* 10300	7350	* 8750	5700	8650	5600	9140
60					* 38700	32050	* 28050	21550	* 22350	15900			19000	12300	360
0					* 18500	14600	* 13550	9700	* 10700	7200			* 8850	5700	8920
0					* 40100	31400	* 29400	20950	* 23150	15500			* 19500	12550	350
-1500			* 12350	* 12350	* 17800	14600	* 13450	9650	* 10550	7150			* 9050	6150	8420
-60			* 28100	* 28100	* 38600	31350	* 29100	20750	* 22800	15350			* 19950	13550	340
-3000			* 21250	* 21250	* 16200	14750	* 12450	9700	* 9400	7250			* 9200	7100	7600
-120			* 46200	* 46200	* 35050	31750	* 26800	20900					* 20200	15750	300
-4500			* 16900	* 16900	* 13150	* 13150	* 9800	* 9800					* 8950	* 8950	6330
-180			* 36350	* 36350	* 28150	* 28150	* 20500	* 20500					* 19600	* 19600	250

Illustration 244 g06282404

336: 7560 kg (16667 lb) counterweight, 6.5 m (21 ft 4 inch) extreme service reach boom, 2.8 m (9 ft 2 inch) extreme service stick, 800 mm (31 inch) heavy-duty TG track shoes.

(mm) (inch)	1500 60		3000 120		4500 180		6000 240		7500 300		9000				
kg / Lb															(mm) (inch)
7500													* 9300	8450	7340
300													* 20550	19000	290
6000							* 10000	* 10000	* 9300	8100			* 8950	6900	8250
240							* 21800	* 21800	* 20400	17450			* 19700	15400	330
4500					* 14450	* 14450	* 11400	11050	* 9900	7900			* 8950	6100	8820
180					* 31050	* 31050	* 24650	23800	* 21550	17000			* 19650	13550	350
3000					* 18000	15700	* 13000	10450	* 10700	7650	8950	5800	8800	5700	9110
120					* 38650	33850	* 28150	22600	* 23250	16450			19400	12600	360
1500					* 16850	14850	* 14350	10000	* 11450	7350	8850	5700	8650	5600	9140
60					* 41000	32050	* 31050	21550	* 24800	15900			19000	12300	360
0					* 19800	14600	* 15050	9700	11350	7200			8850	5700	8920
0					* 44400	31400	* 32550	20950	24400	15500			19550	12550	350
-1500			* 13100	* 13100	* 19700	14600	* 14900	9650	11250	7150			9600	6150	8420
-60			* 29800	* 29800	* 42800	31350	* 32300	20750	24250	15350			21200	13550	340
-3000			* 23600	* 23600	* 17950	14750	* 13800	9700	* 10450	7250			* 10200	7100	7600
-120			* 51300	* 51300	* 38850	31750	* 29800	20900					* 22500	15750	300
-4500			* 18850	* 18850	* 14650	* 14650	* 10900	10000					* 9950	9350	6330
-180			* 40550	* 40550	* 31350	* 31350	* 22850	21650					* 21850	21000	250

Illustration 245 g06282406

336: 7560 kg (16667 lb) counterweight, 6.5 m (21 ft 4 inch) extreme service reach boom, 2.8 m (9 ft 2 inch) extreme service stick, 800 mm (31 inch) heavy-duty TG track shoes heavy lift ON.

(mm) (inch)	1500 60		3000 120		4500 180		6000 240		7500 300		9000				
kg / Lb															(mm) (inch)
7500													* 8500	8250	7340
300													* 18750	18500	290
6000							* 9100	* 9100	* 8400	7900			* 8200	6750	8250
240							* 19750	* 19750	* 18450	16950			* 18050	14950	330
4500					* 13100	* 13100	* 10300	* 10300	* 8950	7700			* 8200	5950	8820
180					* 28150	* 28150	* 22300	* 22300	* 19450	16550			* 18000	13150	350
3000					* 16300	15250	* 11750	10200	* 9650	7400	* 8550	5650	* 8450	5550	9110
120					* 34950	32950	* 25400	21950	* 20950	15950			* 18600	12200	360
1500					* 15900	14450	* 13000	9700	* 10300	7150	8550	5550	8350	5400	9140
60					* 38700	31150	* 28050	20950	* 22350	15400			18450	11900	360
0					* 18500	14200	* 13550	9450	* 10700	7000			8600	5550	8920
0					* 40100	30500	* 29400	20350	* 23150	15050			18950	12150	350
-1500			* 12350	* 12350	* 17800	14150	* 13450	9350	* 10550	6900			* 9050	5950	8420
-60			* 28100	* 28100	* 38600	30450	* 29100	20100	* 22800	14900			* 19950	13150	340
-3000			* 21250	* 21250	* 16200	14350	* 12450	9400	* 9400	7000			* 9200	6900	7600
-120			* 46200	* 46200	* 35050	30800	* 26800	20300					* 20200	15300	300
-4500			* 16900	* 16900	* 13150	* 13150	* 9800	9700					* 8950	* 8950	6330
-180			* 36350	* 36350	* 28150	* 28150	* 20500	* 20500					* 19600	* 19600	250

Illustration 246 g06282356

336: 7560 kg (16667 lb) counterweight, 6.5 m (21 ft 4 inch) extreme service reach boom, 2.8 m (9 ft 2 inch) extreme service stick, 700 mm (28 inch) TG track shoes.

(mm) (inch)	1500 60		3000 120		4500 180		6000 240		7500 300		9000				
kg / Lb															(mm) (inch)
7500													* 9300	8250	7340
300													* 20550	18500	290
6000							* 10000	* 10000	* 9300	7900			* 8950	6750	8250
240							* 21800	* 21800	* 20400	16950			* 19700	14950	330
4500					* 14450	* 14450	* 11400	10750	* 9900	7700			* 8950	5950	8820
180					* 31050	* 31050	* 24650	23200	* 21550	16550			* 19650	13150	350
3000					* 18000	15250	* 13000	10200	* 10700	7400	8700	5650	8550	5550	9110
120					* 38650	32950	* 28150	21950	* 23250	15950			18800	12200	360
1500					* 16850	14450	* 14350	9700	11200	7150	8550	5550	8350	5400	9140
60					* 41000	31150	* 31050	20950	24100	15400			18450	11900	360
0					* 19800	14200	* 15050	9450	11000	7000			8600	5550	8920
0					* 44400	30500	* 32550	20350	23650	15050			18950	12150	350
-1500			* 13100	* 13100	* 19700	14150	* 14900	9350	10950	6900			9300	5950	8420
-60			* 29800	* 29800	* 42800	30450	* 32300	20100	23550	14900			20500	13150	340
-3000			* 23600	* 23600	* 17950	14350	* 13800	9400	* 10450	7000			* 10200	6900	7600
-120			* 51300	* 51300	* 38850	30800	* 29800	20300					* 22500	15300	300
-4500			* 18850	* 18850	* 14650	* 14650	* 10900	9700					* 9950	9100	6330
-180			* 40550	* 40550	* 31350	* 31350	* 22850	21000					* 21850	20400	250

Illustration 247 g06282360

336: 7560 kg (16667 lb) counterweight, 6.5 m (21 ft 4 inch) extreme service reach boom, 2.8 m (9 ft 2 inch) extreme service stick, 700 mm (28 inch) TG track shoes heavy lift ON.

(mm) (inch)	1500 60		3000 120		4500 180		6000 240		7500 300		9000				(mm) (inch)
7500													* 8500	8300	7340
300													* 18750	18650	290
6000							* 9100	* 9100	* 8400	7950			* 8200	6800	8250
240							* 19750	* 19750	* 18450	17100			* 18050	15100	330
4500					* 13100	* 13100	* 10300	* 10300	* 8950	7750			* 8200	6000	8820
180					* 28150	* 28150	* 22300	* 22300	* 19450	16700			* 18000	13250	350
3000					* 16300	15400	* 11750	10300	* 9650	7500	* 8550	5700	* 8450	5600	9110
120					* 34950	33250	* 25400	22150	* 20950	16100			* 18600	12350	360
1500					* 15900	14600	* 13000	9800	* 10300	7250	8650	5600	8450	5450	9140
60					* 38700	31450	* 28050	21150	* 22350	15550			18600	12050	360
0					* 18500	14300	* 13550	9550	* 10700	7050			8700	5600	8920
0					* 40100	30800	* 29400	20550	* 23150	15200			19150	12300	350
-1500			* 12350	* 12350	* 17800	14300	* 13450	9450	* 10550	7000			* 9050	6000	8420
-60			* 28100	* 28100	* 38600	30750	* 29100	20300	* 22800	15050			* 19950	13250	340
-3000			* 21250	* 21250	* 16200	14450	* 12450	9500	* 9400	7100			* 9200	7000	7600
-120			* 46200	* 46200	* 35050	31100	* 26800	20500					* 20200	15450	300
-4500			* 16900	* 16900	* 13150	* 13150	* 9800	* 9800					* 8950	* 8950	6330
-180			* 36350	* 36350	* 28150	* 28150	* 20500	* 20500					* 19600	* 19600	250

Illustration 248 g06282402

336: 7560 kg (16667 lb) counterweight, 6.5 m (21 ft 4 inch) extreme service reach boom, 2.8 m (9 ft 2 inch) extreme service stick, 600 mm (24 inch) DG track shoes.

(mm) (inch)	1500 60		3000 120		4500 180		6000 240		7500 300		9000				(mm) (inch)
7500													* 9300	8300	7340
300													* 20550	18650	290
6000							* 10000	* 10000	* 9300	7950			* 8950	6800	8250
240							* 21800	* 21800	* 20400	17100			* 19700	15100	330
4500					* 14450	* 14450	* 11400	10850	* 9900	7750			* 8950	6000	8820
180					* 31050	* 31050	* 24650	23400	* 21550	16700			* 19650	13250	350
3000					* 18000	15400	* 13000	10300	* 10700	7500	8800	5700	8600	5600	9110
120					* 38650	33250	* 28150	22150	* 23250	16100			19000	12350	360
1500					* 16850	14600	* 14350	9800	11300	7250	8650	5600	8450	5450	9140
60					* 41000	31450	* 31050	21150	24350	15550			18600	12050	360
0					* 19800	14300	* 15050	9550	11100	7050			8700	5600	8920
0					* 44400	30800	* 32550	20550	23900	15200			19150	12300	350
-1500			* 13100	* 13100	* 19700	14300	* 14900	9450	11050	7000			9400	6000	8420
-60			* 29800	* 29800	* 42800	30750	* 32300	20300	23750	15050			20750	13250	340
-3000			* 23600	* 23600	* 17950	14450	* 13800	9500	* 10450	7100			* 10200	7000	7600
-120			* 51300	* 51300	* 38850	31100	* 29800	20500					* 22500	15450	300
-4500			* 18850	* 18850	* 14650	* 14650	* 10900	9800					* 9950	9200	6330
-180			* 40550	* 40550	* 31350	* 31350	* 22850	21200					* 21850	20600	250

Illustration 249 g06282403

336: 7560 kg (16667 lb) counterweight, 6.5 m (21 ft 4 inch) extreme service reach boom, 2.8 m (9 ft 2 inch) extreme service stick, 600 mm (24 inch) DG track shoes heavy lift ON.

6.5 m (21 ft 4 inch) Reach Boom

3.2 m (10 ft 6 inch) Stick

(mm) (inch)	1500 60		3000 120		4500 180		6000 240		7500 300		9000 360				
															(mm) (inch)
7500									* 8000	* 8000			* 6750	* 6750	7700
300													* 14900	* 14900	300
6000									* 8100	* 8100			* 6550	6550	8580
240									* 17700	17550			* 14450	* 14450	340
4500					* 12300	* 12300	* 9900	* 9900	* 8700	7950	* 7750	6000	* 6600	5850	9130
180							* 21450	* 21450	* 18900	17100			* 14500	12900	360
3000					* 15600	* 15600	* 11450	10550	* 9500	7650	* 8400	5850	* 6850	5450	9410
120					* 33500	* 33500	* 24750	22700	* 20550	16500	* 18300	12600	* 15100	12050	370
1500					* 17950	15000	* 12850	10050	* 10250	7400	* 8750	5700	* 7350	5350	9440
60					* 38750	32300	* 27750	21650	* 22200	15950	18900	12300	* 16150	11750	380
0					* 18750	14600	* 13600	9750	* 10750	7200	8700	5650	* 8150	5450	9220
0					* 40550	31450	* 29500	21000	* 23250	15500	18700	12100	* 17950	12000	370
-1500			* 13300	* 13300	* 18350	14550	* 13700	9600	* 10750	7100			* 8950	5800	8750
-60			* 30050	* 30050	* 39800	31250	* 29700	20700	* 23300	15300			* 19650	12850	350
-3000			* 20950	* 20950	* 17000	14650	* 12950	9650	* 10050	7150			* 9150	6650	7960
-120			* 47450	* 47450	* 36850	31500	* 28000	20750	* 21500	15400			* 20200	14700	320
-4500			* 19150	* 19150	* 14400	* 14400	* 10900	9850					* 9200	8450	6750
-180			* 41200	* 41200	* 30950	* 30950	* 23250	21250					* 20250	18900	270

Illustration 250 g06281817

336: 7560 kg (16667 lb) counterweight, 6.5 m (21 ft 4 inch) reach boom, 3.2 m (10 ft 6 inch) stick, 800 mm (31 inch) TG track shoes.

(mm) (inch)	1500 60		3000 120		4500 180		6000 240		7500 300		9000 360				
															(mm) (inch)
7500									* 8750	8250			* 7400	* 7400	7700
300													* 16300	* 16300	300
6000									* 8950	8150			* 7200	6550	8580
240									* 19550	17550			* 15800	14550	340
4500					* 13550	* 13550	* 10950	* 10950	* 9600	7950	* 8500	6000	* 7250	5850	9130
180							* 23650	* 23650	* 20900	17100			* 15900	12900	360
3000					* 17200	15900	* 12650	10550	* 10500	7650	8950	5850	* 7500	5450	9410
120					* 37000	34300	* 27400	22700	* 22800	16500	19200	12600	* 16500	12050	370
1500					* 19850	15000	* 14200	10050	* 11350	7400	8800	5700	* 8050	5350	9440
60					* 42800	32300	* 30700	21650	* 24600	15950	18900	12300	* 17650	11750	380
0					* 20700	14600	* 15100	9750	11300	7200	8700	5650	8400	5450	9220
0					* 44850	31450	* 32650	21000	24250	15500	18700	12100	18500	12000	370
-1500			* 14100	* 14100	* 20300	14550	* 15200	9600	11200	7100			9000	5800	8750
-60			* 31850	* 31850	* 44050	31250	* 32850	20700	24050	15300			19900	12850	350
-3000			* 22200	* 22200	* 18850	14650	* 14350	9650	* 11150	7150			* 10200	6650	7960
-120			* 50250	* 50250	* 40800	31500	* 31050	20750	* 23850	15400			* 22450	14700	320
-4500			* 21250	* 21250	* 16000	14950	* 12150	9850					* 10250	8450	6750
-180			* 45750	* 45750	* 34400	32150	* 25800	21250					* 22550	18900	270

Illustration 251 g06281819

336: 7560 kg (16667 lb) counterweight, 6.5 m (21 ft 4 inch) reach boom, 3.2 m (10 ft 6 inch) stick, 800 mm (31 inch) TG track shoes heavy lift ON.

(mm) (inch)	1500 60		3000 120		4500 180		6000 240		7500 300		9000 360				(mm) (inch)
7500									* 8000	* 8000			* 6750	* 6750	7700
300													* 14900	* 14900	300
6000									* 8100	* 8100			* 6550	* 6550	8580
240									* 17700	* 17700			* 14450	* 14450	340
4500					* 12300	* 12300	* 9900	* 9900	* 8700	8050	* 7750	6050	* 6600	5900	9130
180							* 21450	* 21450	* 18900	17300			* 14500	13100	360
3000					* 15600	* 15600	* 11450	10650	* 9500	7750	* 8400	5950	* 6850	5550	9410
120					* 33500	* 33500	* 24750	23000	* 20550	16700	* 18300	12750	* 15100	12250	370
1500					* 17950	15200	* 12850	10200	* 10250	7500	* 8750	5800	* 7350	5450	9440
60					* 38750	32750	* 27750	21950	* 22200	16150	* 19000	12500	* 16150	11950	380
0					* 18750	14800	* 13600	9850	* 10750	7300	8800	5700	* 8150	5550	9220
0					* 40550	31850	* 29500	21300	* 23250	15750	19000	12300	* 17950	12150	370
-1500			* 13300	* 13300	* 18350	14750	* 13700	9750	* 10750	7200			* 8950	5900	8750
-60			* 30050	* 30050	* 39800	31650	* 29700	21000	* 23300	15550			* 19650	13000	350
-3000			* 20950	* 20950	* 17000	14850	* 12950	9750	* 10050	7250			* 9150	6750	7960
-120			* 47450	* 47450	* 36850	31900	* 28000	21050	* 21500	15650			* 20200	14900	320
-4500			* 19150	* 19150	* 14400	* 14400	* 10900	10000					* 9200	8550	6750
-180			* 41200	* 41200	* 30950	* 30950	* 23250	21550					* 20250	19150	270

Illustration 252 g06281831

336: 7560 kg (16667 lb) counterweight, 6.5 m (21 ft 4 inch) reach boom, 3.2 m (10 ft 6 inch) stick, 800 mm (31 inch) heavy-duty TG track shoes.

(mm) (inch)	1500 60		3000 120		4500 180		6000 240		7500 300		9000 360				(mm) (inch)
7500									* 8750	8350			* 7400	* 7400	7700
300													* 16300	* 16300	300
6000									* 8950	8250			* 7200	6650	8580
240									* 19550	17750			* 15800	14750	340
4500					* 13550	* 13550	* 10950	* 10950	* 9600	8050	* 8500	6050	* 7250	5900	9130
180							* 23650	* 23650	* 20900	17300			* 15900	13100	360
3000					* 17200	16100	* 12650	10650	* 10500	7750	9050	5950	* 7500	5550	9410
120					* 37000	34750	* 27400	23000	* 22800	16700	19500	12750	* 16500	12250	370
1500					* 19850	15200	* 14200	10200	* 11350	7500	8900	5800	* 8050	5450	9440
60					* 42800	32750	* 30700	21950	* 24600	16150	19200	12500	* 17650	11950	380
0					* 20700	14800	* 15100	9850	11450	7300	8800	5700	8550	5550	9220
0					* 44850	31850	* 32650	21300	24650	15750	19000	12300	18750	12150	370
-1500			* 14100	* 14100	* 20300	14750	* 15200	9750	11350	7200			9150	5900	8750
-60			* 31850	* 31850	* 44050	31650	* 32850	21000	24400	15550			20200	13000	350
-3000			* 22200	* 22200	* 18850	14850	* 14350	9750	* 11150	7250			* 10200	6750	7960
-120			* 50250	* 50250	* 40800	31900	* 31050	21050	* 23850	15650			* 22450	14900	320
-4500			* 21250	* 21250	* 16000	15150	* 12150	10000					* 10250	8550	6750
-180			* 45750	* 45750	* 34400	32600	* 25800	21550					* 22550	19150	270

Illustration 253 g06281832

336: 7560 kg (16667 lb) counterweight, 6.5 m (21 ft 4 inch) reach boom, 3.2 m (10 ft 6 inch) stick, 800 mm (31 inch) heavy-duty TG track shoes heavy lift ON.

(mm) (inch)	1500 60		3000 120		4500 180		6000 240		7500 300		9000 360				
kg / Lb															(mm) (inch)
7500									* 8000	* 8000			* 6750	* 6750	7700
300													* 14900	* 14900	300
6000									* 8100	8050			* 6550	6450	8580
240									* 17700	17300			* 14450	14350	340
4500					* 12300	* 12300	* 9900	* 9900	* 8700	7850	* 7750	5900	* 6600	5750	9130
180							* 21450	* 21450	* 18900	16850			* 14500	12700	360
3000					* 15600	* 15600	* 11450	10400	* 9500	7550	* 8400	5750	* 6850	5400	9410
120					* 33500	* 33500	* 24750	22400	* 20550	16250	* 18300	12400	* 15100	11850	370
1500					* 17950	14800	* 12850	9900	* 10250	7300	8650	5650	* 7350	5250	9440
60					* 38750	31850	* 27750	21350	* 22200	15700	18600	12100	* 16150	11600	380
0					* 18750	14400	* 13600	9600	* 10750	7100	8550	5550	* 8150	5350	9220
0					* 40550	30950	* 29500	20650	* 23250	15250	18400	11900	* 17950	11800	370
-1500			* 13300	* 13300	* 18350	14300	* 13700	9450	* 10750	7000			8850	5750	8750
-60			* 30050	* 30050	* 39800	30750	* 29700	20350	* 23300	15100			19550	12650	350
-3000			* 20950	* 20950	* 17000	14400	* 12950	9500	* 10050	7050			* 9150	6550	7960
-120			* 47450	* 47450	* 36850	31000	* 28000	20450	* 21500	15200			* 20200	14450	320
-4500			* 19150	* 19150	* 14400	* 14400	* 10900	9700					* 9200	8300	6750
-180			* 41200	* 41200	* 30950	* 30950	* 23250	20950					* 20250	18600	270

Illustration 254 g06281815

336: 7560 kg (16667 lb) counterweight, 6.5 m (21 ft 4 inch) reach boom, 3.2 m (10 ft 6 inch) stick, 700 mm (28 inch) TG track shoes.

(mm) (inch)	1500 60		3000 120		4500 180		6000 240		7500 300		9000 360				
kg / Lb															(mm) (inch)
7500									* 8750	8100			* 7400	* 7400	7700
300													* 16300	* 16300	300
6000									* 8950	8050			* 7200	6450	8580
240									* 19550	17300			* 15800	14350	340
4500					* 13550	* 13550	* 10950	* 10950	* 9600	7850	* 8500	5900	* 7250	5750	9130
180							* 23650	23600	* 20900	16850			* 15900	12700	360
3000					* 17200	15700	* 12650	10400	* 10500	7550	8800	5750	* 7500	5400	9410
120					* 37000	33850	* 27400	22400	* 22800	16250	18900	12400	* 16500	11850	370
1500					* 19850	14800	* 14200	9900	11300	7300	8650	5650	* 8050	5250	9440
60					* 42800	31850	* 30700	21350	24350	15700	18600	12100	* 17650	11600	380
0					* 20700	14400	* 15100	9600	11100	7100	8550	5550	8250	5350	9220
0					* 44850	30950	* 32650	20650	23900	15250	18400	11900	18200	11800	370
-1500			* 14100	* 14100	* 20300	14300	* 15200	9450	11000	7000			8850	5750	8750
-60			* 31850	* 31850	* 44050	30750	* 32850	20350	23650	15100			19550	12650	350
-3000			* 22200	* 22200	* 18850	14400	* 14350	9500	11050	7050			10200	6550	7960
-120			* 50250	* 50250	* 40800	31000	* 31050	20450	23800	15200			* 22450	14450	320
-4500			* 21250	* 21250	* 16000	14700	* 12150	9700					* 10250	8300	6750
-180			* 45750	* 45750	* 34400	31650	* 25800	20950					* 22550	18600	270

Illustration 255 g06281816

336: 7560 kg (16667 lb) counterweight, 6.5 m (21 ft 4 inch) reach boom, 3.2 m (10 ft 6 inch) stick, 700 mm (28 inch) TG track shoes heavy lift ON.

(mm) (inch)	1500 60		3000 120		4500 180		6000 240		7500 300		9000 360				
kg / Lb															(mm) (inch)
7500									* 8000	* 8000			* 6750	* 6750	7700
300													* 14900	* 14900	300
6000									* 8100	* 8100			* 6550	6500	8580
240									* 17700	17450			* 14450	* 14450	340
4500					* 12300	* 12300	* 9900	* 9900	* 8700	7900	* 7750	5950	* 6600	5800	9130
180							* 21450	* 21450	* 18900	17000			* 14500	12850	360
3000					* 15600	* 15600	* 11450	10500	* 9500	7600	* 8400	5800	* 6850	5450	9410
120					* 33500	* 33500	* 24750	22600	* 20550	16400	* 18300	12500	* 15100	12000	370
1500					* 17950	14900	* 12850	10000	* 10250	7350	8750	5700	* 7350	5300	9440
60					* 38750	32150	* 27750	21550	* 22200	15850	18800	12250	* 16150	11700	380
0					* 18750	14550	* 13600	9700	* 10750	7150	8650	5600	* 8150	5400	9220
0					* 40550	31250	* 29500	20850	* 23250	15400	18600	12050	* 17950	11900	370
-1500			* 13300	* 13300	* 18350	14450	* 13700	9550	* 10750	7050			* 8950	5800	8750
-60			* 30050	* 30050	* 39800	31050	* 29700	20550	* 23300	15250			* 19650	12750	350
-3000			* 20950	* 20950	* 17000	14550	* 12950	9600	* 10050	7100			* 9150	6600	7960
-120			* 47450	* 47450	* 36850	31300	* 28000	20650	* 21500	15350			* 20200	14600	320
-4500			* 19150	* 19150	* 14400	* 14400	* 10900	9800					* 9200	8400	6750
-180			* 41200	* 41200	* 30950	* 30950	* 23250	21150					* 20250	18750	270

Illustration 256 g06281821

336: 7560 kg (16667 lb) counterweight, 6.5 m (21 ft 4 inch) reach boom, 3.2 m (10 ft 6 inch) stick, 600 mm (24 inch) DG track shoes.

(mm) (inch)	1500 60		3000 120		4500 180		6000 240		7500 300		9000 360				
kg / Lb															(mm) (inch)
7500									* 8750	8200			* 7400	* 7400	7700
300													* 16300	* 16300	300
6000									* 8950	8100			* 7200	6500	8580
240									* 19550	17450			* 15800	14450	340
4500					* 13550	* 13550	* 10950	* 10950	* 9600	7900	* 8500	5950	* 7250	5800	9130
180							* 23650	* 23650	* 20900	17000			* 15900	12850	360
3000					* 17200	15800	* 12650	10500	* 10500	7600	8900	5800	* 7500	5450	9410
120					* 37000	34150	* 27400	22600	* 22800	16400	19100	12500	* 16500	12000	370
1500					* 19850	14900	* 14200	10000	* 11350	7350	8750	5700	* 8050	5300	9440
60					* 42800	32150	* 30700	21550	24600	15850	18800	12250	* 17650	11700	380
0					* 20700	14550	* 15100	9700	11200	7150	8650	5600	8350	5400	9220
0					* 44850	31250	* 32650	20850	24100	15400	18600	12050	18350	11900	370
-1500			* 14100	* 14100	* 20300	14450	* 15200	9550	11100	7050			8950	5800	8750
-60			* 31850	* 31850	* 44050	31050	* 32850	20550	23900	15250			19750	12750	350
-3000			* 22200	* 22200	* 18850	14550	* 14350	9600	* 11150	7100			* 10200	6600	7960
-120			* 50250	* 50250	* 40800	31300	* 31050	20650	* 23850	15350			* 22450	14600	320
-4500			* 21250	* 21250	* 16000	14850	* 12150	9800					* 10250	8400	6750
-180			* 45750	* 45750	* 34400	31950	* 25800	21150					* 22550	18750	270

Illustration 257 g06281829

336: 7560 kg (16667 lb) counterweight, 6.5 m (21 ft 4 inch) reach boom, 3.2 m (10 ft 6 inch) stick, 600 mm (24 inch) DG track shoes heavy lift ON.

6.5 m (21 ft 4 inch) Extreme Service Reach Boom

3.2 m (10 ft 6 inch) Extreme Service Stick

(mm) (inch)	1500 60		3000 120		4500 180		6000 240		7500 300		9000 360				
															(mm) (inch)
7500									* 7850	* 7850			* 6700	* 6700	7700
300													* 14800	* 14800	300
6000									* 7950	* 7950			* 6500	6450	8580
240									* 17350	17350			* 14300	* 14300	340
4500					* 12150	* 12150	* 9750	* 9750	* 8550	7850	* 7700	5850	* 6550	5750	9130
180							* 21100	* 21100	* 18550	16900			* 14400	12650	360
3000					* 15350	* 15350	* 11300	10400	* 9300	7550	* 8250	5750	* 6800	5350	9410
120					* 33000	* 33000	* 24350	22450	* 20200	16250	* 17950	12350	* 14950	11800	370
1500					* 17700	14750	* 12600	9900	* 10050	7250	* 8550	5600	* 7300	5200	9440
60					* 38150	31850	* 27250	21350	* 21800	15650	* 18600	12050	* 16000	11500	380
0					* 18450	14350	* 13400	9550	* 10550	7050	8550	5500	* 8100	5300	9220
0					* 39900	30900	* 29000	20600	* 22850	15200	18450	11850	* 17800	11700	370
-1500			* 13250	* 13250	* 18050	14250	* 13450	9400	* 10550	6950			* 8750	5700	8750
-60			* 29900	* 29900	* 39100	30700	* 29150	20300	* 22850	15000			* 19250	12550	350
-3000			* 20900	* 20900	* 16700	14400	* 12700	9450	* 9850	7000			* 8950	6500	7960
-120			* 47300	* 47300	* 36200	30950	* 27450	20350	* 21050	15100			* 19750	14400	320
-4500			* 18750	* 18750	* 14150	* 14150	* 10700	9650					* 9000	8300	6750
-180			* 40350	* 40350	* 30350	* 30350	* 22750	20900					* 19800	18550	270

Illustration 258 g06282335

336: 7560 kg (16667 lb) counterweight, 6.5 m (21 ft 4 inch) extreme service reach boom, 3.2 m (10 ft 6 inch) extreme service stick, 800 mm (31 inch) TG track shoes.

(mm) (inch)	1500 60		3000 120		4500 180		6000 240		7500 300		9000 360				
															(mm) (inch)
7500									* 8700	8150			* 7350	* 7350	7700
300													* 16200	* 16200	300
6000									* 8800	8100			* 7100	6450	8580
240									* 19250	17350			* 15650	14300	340
4500					* 13400	* 13400	* 10800	* 10800	* 9450	7850	* 8400	5850	* 7150	5750	9130
180							* 23350	* 23350	* 20550	16900			* 15750	12650	360
3000					* 17000	15750	* 12500	10400	* 10350	7550	8850	5750	* 7450	5350	9410
120					* 36500	33950	* 27000	22450	* 22400	16250	19000	12350	* 16350	11800	370
1500					* 19550	14750	* 14000	9900	* 11150	7250	8700	5600	* 8000	5200	9440
60					* 42200	31850	* 30200	21350	* 24200	15650	18650	12050	* 17550	11500	380
0					* 20400	14350	* 14850	9550	11150	7050	8550	5500	8300	5300	9220
0					* 44200	30900	* 32150	20600	24000	15200	18450	11850	18250	11700	370
-1500			* 14000	* 14000	* 20000	14250	* 14950	9400	11050	6950			8900	5700	8750
-60			* 31700	* 31700	* 43350	30700	* 32350	20300	23750	15000			19600	12550	350
-3000			* 22150	* 22150	* 18550	14400	* 14100	9450	* 10950	7000			* 10000	6500	7960
-120			* 50100	* 50100	* 40150	30950	* 30500	20350	* 23450	15100			* 22000	14400	320
-4500			* 20850	* 20850	* 15700	14700	* 11900	9650					* 10050	8300	6750
-180			* 44950	* 44950	* 33750	31650	* 25350	20900					* 22100	18550	270

Illustration 259 g06282337

336: 7560 kg (16667 lb) counterweight, 6.5 m (21 ft 4 inch) extreme service reach boom, 3.2 m (10 ft 6 inch) extreme service stick, 800 mm (31 inch) TG track shoes heavy lift ON.

(mm) (inch)	1500 60		3000 120		4500 180		6000 240		7500 300		9000 360				(mm) (inch)
7500									* 7850	* 7850			* 6700	* 6700	7700
300													* 14800	* 14800	300
6000									* 7950	* 7950			* 6500	* 6500	8580
240									* 17350	* 17350			* 14300	* 14300	340
4500					* 12150	* 12150	* 9750	* 9750	* 8550	7950	* 7700	5950	* 6550	5800	9130
180							* 21100	* 21100	* 18550	17100			* 14400	12850	360
3000					* 15350	* 15350	* 11300	10550	* 9300	7650	* 8250	5800	* 6800	5450	9410
120					* 33000	* 33000	* 24350	22750	* 20200	16450	* 17950	12500	* 14950	11950	370
1500					* 17700	15000	* 12600	10050	* 10050	7350	* 8550	5700	* 7300	5300	9440
60					* 38150	32250	* 27250	21600	* 21800	15850	* 18600	12200	* 16000	11650	380
0					* 18450	14550	* 13400	9700	* 10550	7150	8700	5600	* 8100	5400	9220
0					* 39900	31350	* 29000	20900	* 22850	15400	18750	12000	* 17800	11850	370
-1500			* 13250	* 13250	* 18050	14450	* 13450	9550	* 10550	7050			* 8750	5750	8750
-60			* 29900	* 29900	* 39100	31100	* 29150	20550	* 22850	15200			* 19250	12700	350
-3000			* 20900	* 20900	* 16700	14600	* 12700	9600	* 9850	7100			* 8950	6600	7960
-120			* 47300	* 47300	* 36200	31350	* 27450	20650	* 21050	15300			* 19750	14600	320
-4500			* 18750	* 18750	* 14150	* 14150	* 10700	9800					* 9000	8400	6750
-180			* 40350	* 40350	* 30350	* 30350	* 22750	21150					* 19800	18800	270

Illustration 260 g06282343

336: 7560 kg (16667 lb) counterweight, 6.5 m (21 ft 4 inch) extreme service reach boom, 3.2 m (10 ft 6 inch) extreme service stick, 800 mm (31 inch) heavy-duty TG track shoes.

(mm) (inch)	1500 60		3000 120		4500 180		6000 240		7500 300		9000 360				(mm) (inch)
7500									* 8700	8250			* 7350	* 7350	7700
300													* 16200	* 16200	300
6000									* 8800	8200			* 7100	6550	8580
240									* 19250	17550			* 15650	14500	340
4500					* 13400	* 13400	* 10800	* 10800	* 9450	7950	* 8400	5950	* 7150	5800	9130
180							* 23350	* 23350	* 20550	17100			* 15750	12850	360
3000					* 17000	15950	* 12500	10550	* 10350	7650	8950	5800	* 7450	5450	9410
120					* 36500	34400	* 27000	22750	* 22400	16450	19250	12500	* 16350	11950	370
1500					* 19550	15000	* 14000	10050	* 11150	7350	8800	5700	* 8000	5300	9440
60					* 42200	32250	* 30200	21600	* 24200	15850	18950	12200	* 17550	11650	380
0					* 20400	14550	* 14850	9700	11300	7150	8700	5600	8400	5400	9220
0					* 44200	31350	* 32150	20900	24350	15400	18750	12000	18500	11850	370
-1500			* 14000	* 14000	* 20000	14450	* 14950	9550	11200	7050			9050	5750	8750
-60			* 31700	* 31700	* 43350	31100	* 32350	20550	24100	15200			19900	12700	350
-3000			* 22150	* 22150	* 18550	14600	* 14100	9600	* 10950	7100			* 10000	6600	7960
-120			* 50100	* 50100	* 40150	31350	* 30500	20650	* 23450	15300			* 22000	14600	320
-4500			* 20850	* 20850	* 15700	14900	* 11900	9800					* 10050	8400	6750
-180			* 44950	* 44950	* 33750	32100	* 25350	21150					* 22100	18800	270

Illustration 261 g06282349

336: 7560 kg (16667 lb) counterweight, 6.5 m (21 ft 4 inch) extreme service reach boom, 3.2 m (10 ft 6 inch) extreme service stick, 800 mm (31 inch) heavy-duty TG track shoes heavy lift ON.

(mm) (inch)	1500 60		3000 120		4500 180		6000 240		7500 300		9000 360				
kg / Lb															(mm) (inch)
7500									* 7850	* 7850			* 6700	* 6700	7700
300													* 14800	* 14800	300
6000									* 7950	* 7950			* 6500	6350	8580
240									* 17350	17100			* 14300	14100	340
4500					* 12150	* 12150	* 9750	* 9750	* 8550	7750	* 7700	5800	* 6550	5650	9130
180							* 21100	* 21100	* 18550	16650			* 14400	12450	360
3000					* 15350	* 15350	* 11300	10250	* 9300	7450	* 8250	5650	* 6800	5250	9410
120					* 33000	* 33000	* 24350	22150	* 20200	16000	* 17950	12150	* 14950	11600	370
1500					* 17700	14550	* 12600	9750	* 10050	7150	8550	5500	* 7300	5150	9440
60					* 38150	31350	* 27250	21000	* 21800	15400	18350	11850	* 16000	11300	380
0					* 18450	14150	* 13400	9400	* 10550	6950	8450	5400	* 8100	5250	9220
0					* 39900	30400	* 29000	20300	* 22850	14950	18150	11650	* 17800	11500	370
-1500			* 13250	* 13250	* 18050	14050	* 13450	9250	* 10550	6850			* 8750	5600	8750
-60			* 29900	* 29900	* 39100	30200	* 29150	19950	* 22850	14750			* 19250	12300	350
-3000			* 20900	* 20900	* 16700	14150	* 12700	9300	* 9850	6900			* 8950	6400	7960
-120			* 47300	* 47300	* 36200	30450	* 27450	20050	* 21050	14850			* 19750	14150	320
-4500			* 18750	* 18750	* 14150	* 14150	* 10700	9500					* 9000	8150	6750
-180			* 40350	* 40350	* 30350	* 30350	* 22750	20550					* 19800	18250	270

Illustration 262 g06282332

336: 7560 kg (16667 lb) counterweight, 6.5 m (21 ft 4 inch) extreme service reach boom, 3.2 m (10 ft 6 inch) extreme service stick, 700 mm (28 inch) TG track shoes.

(mm) (inch)	1500 60		3000 120		4500 180		6000 240		7500 300		9000 360				
kg / Lb															(mm) (inch)
7500									* 8700	8050			* 7350	* 7350	7700
300													* 16200	* 16200	300
6000									* 8800	7950			* 7100	6350	8580
240									* 19250	17100			* 15650	14100	340
4500					* 13400	* 13400	* 10800	* 10800	* 9450	7750	* 8400	5800	* 7150	5650	9130
180							* 23350	* 23350	* 20550	16650			* 15750	12450	360
3000					* 17000	15500	* 12500	10250	* 10350	7450	8700	5650	* 7450	5250	9410
120					* 36500	33500	* 27000	22150	* 22400	16000	18700	12150	* 16350	11600	370
1500					* 19550	14550	* 14000	9750	* 11150	7150	8550	5500	7950	5150	9440
60					* 42200	31350	* 30200	21000	24100	15400	18350	11850	17500	11300	380
0					* 20400	14150	* 14850	9400	10950	6950	8450	5400	8150	5250	9220
0					* 44200	30400	* 32150	20300	23600	14950	18150	11650	17950	11500	370
-1500			* 14000	* 14000	* 20000	14050	* 14950	9250	10850	6850			8750	5600	8750
-60			* 31700	* 31700	* 43350	30200	* 32350	19950	23350	14750			19300	12300	350
-3000			* 22150	* 22150	* 18550	14150	* 14100	9300	10900	6900			* 10000	6400	7960
-120			* 50100	* 50100	* 40150	30450	* 30500	20050	* 23450	14850			* 22000	14150	320
-4500			* 20850	* 20850	* 15700	14500	* 11900	9500					* 10050	8150	6750
-180			* 44950	* 44950	* 33750	31200	* 25350	20550					* 22100	18250	270

Illustration 263 g06282333

336: 7560 kg (16667 lb) counterweight, 6.5 m (21 ft 4 inch) extreme service reach boom, 3.2 m (10 ft 6 inch) extreme service stick, 700 mm (28 inch) TG track shoes heavy lift ON.

(mm) (inch)	1500 60		3000 120		4500 180		6000 240		7500 300		9000 360				(mm) (inch)
7500									* 7850	* 7850			* 6700	* 6700	7700
300													* 14800	* 14800	300
6000									* 7950	* 7950			* 6500	6400	8580
240									* 17350	17250			* 14300	14250	340
4500					* 12150	* 12150	* 9750	* 9750	* 8550	7800	* 7700	5850	* 6550	5700	9130
180							* 21100	* 21100	* 18550	16800			* 14400	12600	360
3000					* 15350	* 15350	* 11300	10350	* 9300	7500	* 8250	5700	* 6800	5300	9410
120					* 33000	* 33000	* 24350	22350	* 20200	16150	* 17950	12250	* 14950	11700	370
1500					* 17700	14700	* 12600	9850	* 10050	7200	* 8550	5550	* 7300	5200	9440
60					* 38150	31650	* 27250	21200	* 21800	15550	18550	11950	* 16000	11400	380
0					* 18450	14300	* 13400	9500	* 10550	7000	8500	5450	* 8100	5300	9220
0					* 39900	30700	* 29000	20450	* 22850	15100	18350	11750	* 17800	11600	370
-1500			* 13250	* 13250	* 18050	14200	* 13450	9350	* 10550	6900			* 8750	5650	8750
-60			* 29900	* 29900	* 39100	30500	* 29150	20150	* 22850	14900			* 19250	12450	350
-3000			* 20900	* 20900	* 16700	14300	* 12700	9400	* 9850	6950			* 8950	6450	7960
-120			* 47300	* 47300	* 36200	30750	* 27450	20250	* 21050	15000			* 19750	14300	320
-4500			* 18750	* 18750	* 14150	* 14150	* 10700	9600					* 9000	8250	6750
-180			* 40350	* 40350	* 30350	* 30350	* 22750	20750					* 19800	18450	270

Illustration 264 g06282340

336: 7560 kg (16667 lb) counterweight, 6.5 m (21 ft 4 inch) extreme service reach boom, 3.2 m (10 ft 6 inch) extreme service stick, 600 mm (24 inch) DG track shoes.

(mm) (inch)	1500 60		3000 120		4500 180		6000 240		7500 300		9000 360				(mm) (inch)
7500									* 8700	8100			* 7350	* 7350	7700
300													* 16200	* 16200	300
6000									* 8800	8050			* 7100	6400	8580
240									* 19250	17250			* 15650	14250	340
4500					* 13400	* 13400	* 10800	* 10800	* 9450	7800	* 8400	5850	* 7150	5700	9130
180							* 23350	* 23350	* 20550	16800			* 15750	12600	360
3000					* 17000	15650	* 12500	10350	* 10350	7500	8800	5700	* 7450	5300	9410
120					* 36500	33800	* 27000	22350	* 22400	16150	18850	12250	* 16350	11700	370
1500					* 19550	14700	* 14000	9850	* 11150	7200	8650	5550	* 8000	5200	9440
60					* 42200	31650	* 30200	21200	* 24200	15550	18550	11950	* 17550	11400	380
0					* 20400	14300	* 14850	9500	11100	7000	8500	5450	8250	5300	9220
0					* 44200	30700	* 32150	20450	23850	15100	18350	11750	18100	11600	370
-1500			* 14000	* 14000	* 20000	14200	* 14950	9350	10950	6900			8850	5650	8750
-60			* 31700	* 31700	* 43350	30500	* 32350	20150	23600	14900			19500	12450	350
-3000			* 22150	* 22150	* 18550	14300	* 14100	9400	* 10950	6950			* 10000	6450	7960
-120			* 50100	* 50100	* 40150	30750	* 30500	20250	* 23450	15000			* 22000	14300	320
-4500			* 20850	* 20850	* 15700	14600	* 11900	9600					* 10050	8250	6750
-180			* 44950	* 44950	* 33750	31500	* 25350	20750					* 22100	18450	270

Illustration 265 g06282342

336: 7560 kg (16667 lb) counterweight, 6.5 m (21 ft 4 inch) extreme service reach boom, 3.2 m (10 ft 6 inch) extreme service stick, 600 mm (24 inch) DG track shoes heavy lift ON.

6.5 m (21 ft 4 inch) Reach Boom

3.9 m (12 ft 10 inch) Stick

(mm) (inch)	1500 60		3000 120		4500 180		6000 240		7500 300		9000 360				(mm) (inch)
9000													* 5650	* 5650	7350
360													* 12600	* 12600	290
7500									* 7000	* 7000			* 5250	* 5250	8540
300									* 15400	* 15400			* 11650	* 11650	340
6000									* 7250	* 7250	* 6850	6150	* 5100	* 5100	9340
240									* 15900	* 15900	* 13150	13150	* 11250	* 11250	370
4500							* 8900	* 8900	* 7950	* 7950	* 7400	6050	* 5150	* 5150	9840
180							* 19250	* 19250	* 17300	17300	* 16200	12950	* 11250	* 11250	390
3000					* 13950	* 13950	* 10550	* 10550	* 8850	7700	* 7850	5850	* 5300	4900	10100
120					* 29950	* 29950	* 22800	* 22800	* 19200	16600	* 17150	12600	* 11600	10800	400
1500					* 16800	15250	* 12100	10150	* 9750	7400	* 8350	5700	* 5600	4800	10130
60					* 36250	32850	* 26150	21850	* 21100	15950	* 18150	12250	* 12300	10500	400
0			* 7750	* 7750	* 18300	14600	* 13200	9750	* 10400	7150	8650	5550	* 6100	4850	9930
0			* 17650	* 17650	* 39600	31450	* 28550	20950	* 22550	15450	18550	11950	* 13450	10650	390
-1500	* 8150	* 8150	* 12150	* 12150	* 18500	14400	* 13600	9500	* 10700	7000	8550	5500	* 6950	5150	9490
-60	* 18100	* 18100	* 27450	* 27450	* 40100	30950	* 29500	20500	* 23150	15100	18400	11850	* 15350	11300	380
-3000	* 12900	* 12900	* 17750	* 17750	* 17700	14400	* 13300	9450	* 10400	7000			* 8400	5700	8770
-120	* 28850	* 28850	* 40150	* 40150	* 38350	30950	* 28700	20400	* 22400	15050			* 18500	12650	350
-4500	* 18500	* 18500	* 21900	* 21900	* 15800	14600	* 11950	9600	* 8950	7100			* 8550	6900	7690
-180	* 41600	* 41600	* 47250	* 47250	* 34000	31450	* 25650	20700	* 18850	15400			* 18850	15400	300
-6000					* 12000	* 12000	* 8500	* 8500					* 8350	* 8350	6060
-240					* 25300	* 25300							* 18250	* 18250	240

Illustration 266 g06281787

336: 7560 kg (16667 lb) counterweight, 6.5 m (21 ft 4 inch) reach boom, 3.9 m (12 ft 10 inch) stick, 800 mm (31 inch) TG track shoes.

(mm) (inch)	1500 60		3000 120		4500 180		6000 240		7500 300		9000 360				(mm) (inch)
9000													* 6200	* 6200	7350
360													* 13800	* 13800	290
7500									* 7750	* 7750			* 5800	* 5800	8540
300									* 17050	* 17050			* 12750	* 12750	340
6000									* 8050	* 8050	* 7500	6150	* 5600	* 5600	9340
240									* 17600	* 17600	* 14450	13150	* 12350	* 12350	370
4500							* 9800	* 9800	* 8800	8050	* 8250	6050	* 5650	5200	9840
180							* 21250	* 21250	* 19150	17300	* 18000	12950	* 12400	11450	390
3000					* 15400	* 15400	* 11650	10700	* 9800	7700	* 8750	5850	* 5800	4900	10100
120					* 33100	* 33100	* 25200	23050	* 21250	16600	* 19050	12600	* 12750	10800	400
1500					* 18600	15250	* 13400	10150	* 10800	7400	8800	5700	* 6150	4800	10130
60					* 40050	32850	* 28950	21850	* 23400	15950	18900	12250	* 13500	10500	400
0			* 8250	* 8250	* 20250	14600	* 14600	9750	11250	7150	8650	5550	* 6700	4850	9930
0			* 18750	* 18750	* 43800	31450	* 31650	20950	24200	15450	18550	11950	* 14750	10650	390
-1500	* 8650	* 8650	* 12900	* 12900	* 20500	14400	* 15100	9500	11100	7000	8550	5500	* 7600	5150	9490
-60	* 19250	* 19250	* 29150	* 29150	* 44400	30950	* 32650	20500	23850	15100	18400	11850	* 16800	11300	380
-3000	* 13650	* 13650	* 18800	* 18800	* 19650	14400	* 14750	9450	11050	7000			8900	5700	8770
-120	* 30550	* 30550	* 42550	* 42550	* 42500	30950	* 31850	20400	23800	15050			19700	12650	350
-4500	* 19600	* 19600	* 24300	* 24300	* 17500	14600	* 13300	9600	* 10000	7100			* 9550	6900	7690
-180	* 44050	* 44050	* 52400	* 52400	* 37750	31450	* 28500	20700	* 21000	15400			* 21000	15400	300
-6000					* 13400	* 13400	* 9500	* 9500					* 9300	* 9300	6060
-240					* 28200	* 28200							* 20400	* 20400	240

Illustration 267 g06281789

336: 7560 kg (16667 lb) counterweight, 6.5 m (21 ft 4 inch) reach boom, 3.9 m (12 ft 10 inch) stick, 800 mm (31 inch) TG track shoes heavy lift ON.

(mm) (inch)	1500 60		3000 120		4500 180		6000 240		7500 300		9000 360				
kg / Lb															(mm) (inch)
9000													* 5650	* 5650	7350
360													* 12600	* 12600	290
7500									* 7000	* 7000			* 5250	* 5250	8540
300									* 15400	* 15400			* 11650	* 11650	340
6000									* 7250	* 7250	* 6850	6200	* 5100	* 5100	9340
240									* 15900	* 15900	* 13150	* 13150	* 11250	* 11250	370
4500							* 8900	* 8900	* 7950	* 7950	* 7400	6100	* 5150	* 5150	9840
180							* 19250	* 19250	* 17300	* 17300	* 16200	13150	* 11250	* 11250	390
3000					* 13950	* 13950	* 10550	* 10550	* 8850	7800	* 7850	5950	* 5300	4950	10100
120					* 29950	* 29950	* 22800	* 22800	* 19200	16850	* 17150	12800	* 11600	10950	400
1500					* 16800	15450	* 12100	10250	* 9750	7500	* 8350	5800	* 5600	4850	10130
60					* 36250	33250	* 26150	22150	* 21100	16200	* 18150	12450	* 12300	10700	400
0			* 7750	* 7750	* 18300	14800	* 13200	9850	* 10400	7250	* 8700	5650	* 6100	4950	9930
0			* 17650	* 17650	* 39600	31900	* 28550	21250	* 22550	15650	* 18850	12150	* 13450	10850	390
-1500	* 8150	* 8150	* 12150	* 12150	* 18500	14600	* 13600	9650	* 10700	7100	8700	5600	* 6950	5200	9490
-60	* 18100	* 18100	* 27450	* 27450	* 40100	31400	* 29500	20800	* 23150	15350	18700	12000	* 15350	11450	380
-3000	* 12900	* 12900	* 17750	* 17750	* 17700	14600	* 13300	9600	* 10400	7100			* 8400	5800	8770
-120	* 28850	* 28850	* 40150	* 40150	* 38350	31400	* 28700	20700	* 22400	15300			* 18500	12800	350
-4500	* 18500	* 18500	* 21900	* 21900	* 15800	14800	* 11950	9750	* 8950	7250			* 8550	7000	7690
-180	* 41600	* 41600	* 47250	* 47250	* 34000	31850	* 25650	20950	* 18850	15650			* 18850	15600	300
-6000					* 12000	* 12000	* 8500	* 8500					* 8350	* 8350	6060
-240					* 25300	* 25300							* 18250	* 18250	240

Illustration 268 g06281795

336: 7560 kg (16667 lb) counterweight, 6.5 m (21 ft 4 inch) reach boom, 3.9 m (12 ft 10 inch) stick, 800 mm (31 inch) heavy-duty TG track shoes.

(mm) (inch)	1500 60		3000 120		4500 180		6000 240		7500 300		9000 360				
kg / Lb															(mm) (inch)
9000													* 6200	* 6200	7350
360													* 13800	* 13800	290
7500									* 7750	* 7750			* 5800	* 5800	8540
300									* 17050	* 17050			* 12750	* 12750	340
6000									* 8050	* 8050	* 7500	6200	* 5600	* 5600	9340
240									* 17600	* 17600	* 14450	13300	* 12350	* 12350	370
4500							* 9800	* 9800	* 8800	8150	* 8250	6100	* 5650	5250	9840
180							* 21250	* 21250	* 19150	17500	* 18000	13150	* 12400	11650	390
3000					* 15400	* 15400	* 11650	10850	* 9800	7800	* 8750	5950	* 5800	4950	10100
120					* 33100	* 33100	* 25200	23350	* 21250	16850	* 19050	12800	* 12750	10950	400
1500					* 18600	15450	* 13400	10250	* 10800	7500	8900	5800	* 6150	4850	10130
60					* 40050	33250	* 28950	22150	* 23400	16200	19150	12450	* 13500	10700	400
0			* 8250	* 8250	* 20250	14800	* 14600	9850	11400	7250	8750	5650	* 6700	4950	9930
0			* 18750	* 18750	* 43800	31900	* 31650	21250	24550	15650	18850	12150	* 14750	10850	390
-1500	* 8650	* 8650	* 12900	* 12900	* 20500	14600	* 15100	9650	11250	7100	8700	5600	* 7600	5200	9490
-60	* 19250	* 19250	* 29150	* 29150	* 44400	31400	* 32650	20800	24200	15350	18700	12000	* 16800	11450	380
-3000	* 13650	* 13650	* 18800	* 18800	* 19650	14600	* 14750	9600	11200	7100			9050	5800	8770
-120	* 30550	* 30550	* 42550	* 42550	* 42500	31400	* 31850	20700	24150	15300			20000	12800	350
-4500	* 19600	* 19600	* 24300	* 24300	* 17500	14800	* 13300	9750	* 10000	7250			* 9550	7000	7690
-180	* 44050	* 44050	* 52400	* 52400	* 37750	31850	* 28500	20950	* 21000	15650			* 21000	15600	300
-6000					* 13400	* 13400	* 9500	* 9500					* 9300	* 9300	6060
-240					* 28200	* 28200							* 20400	* 20400	240

Illustration 269 g06281796

336: 7560 kg (16667 lb) counterweight, 6.5 m (21 ft 4 inch) reach boom, 3.9 m (12 ft 10 inch) stick, 800 mm (31 inch) heavy-duty TG track shoes heavy lift ON.

(mm) (inch)	1500 60		3000 120		4500 180		6000 240		7500 300		9000 360				(mm) (inch)
9000													* 5650	* 5650	7350
360													* 12600	* 12600	290
7500									* 7000	* 7000			* 5250	* 5250	8540
300									* 15400	* 15400			* 11650	* 11650	340
6000									* 7250	* 7250	* 6850	6050	* 5100	* 5100	9340
240									* 15900	* 15900	* 13150	12950	* 11250	* 11250	370
4500							* 8900	* 8900	* 7950	7900	* 7400	5950	* 5150	5100	9840
180							* 19250	* 19250	* 17300	17050	* 16200	12750	* 11250	* 11250	390
3000					* 13950	* 13950	* 10550	* 10550	* 8850	7600	* 7850	5800	* 5300	4800	10100
120					* 29950	* 29950	* 22800	22750	* 19200	16400	* 17150	12450	* 11600	10600	400
1500					* 16800	15000	* 12100	10000	* 9750	7300	* 8350	5600	* 5600	4700	10130
60					* 36250	32350	* 26150	21550	* 21100	15700	* 18150	12050	* 12300	10350	400
0			* 7750	* 7750	* 18300	14400	* 13200	9600	* 10400	7050	8500	5500	* 6100	4750	9930
0			* 17650	* 17650	* 39600	31000	* 28550	20650	* 22550	15200	18250	11800	* 13450	10500	390
-1500	* 8150	* 8150	* 12150	* 12150	* 18500	14150	* 13600	9350	* 10700	6900	8400	5400	* 6950	5050	9490
-60	* 18100	* 18100	* 27450	* 27450	* 40100	30500	* 29500	20200	* 23150	14850	18100	11650	* 15350	11100	380
-3000	* 12900	* 12900	* 17750	* 17750	* 17700	14200	* 13300	9300	* 10400	6900			* 8400	5650	8770
-120	* 28850	* 28850	* 40150	* 40150	* 38350	30500	* 28700	20100	* 22400	14800			* 18500	12450	350
-4500	* 18500	* 18500	* 21900	* 21900	* 15800	14400	* 11950	9450	* 8950	7000			* 8550	6800	7690
-180	* 41600	* 41600	* 47250	* 47250	* 34000	30950	* 25650	20350	* 18850	15150			* 18850	15150	300
-6000					* 12000	* 12000	* 8500	* 8500					* 8350	* 8350	6060
-240					* 25300	* 25300							* 18250	* 18250	240

Illustration 270 g06281778

336: 7560 kg (16667 lb) counterweight, 6.5 m (21 ft 4 inch) reach boom, 3.9 m (12 ft 10 inch) stick, 700 mm (28 inch) TG track shoes.

(mm) (inch)	1500 60		3000 120		4500 180		6000 240		7500 300		9000 360				(mm) (inch)
9000													* 6200	* 6200	7350
360													* 13800	* 13800	290
7500									* 7750	* 7750			* 5800	* 5800	8540
300									* 17050	* 17050			* 12750	* 12750	340
6000									* 8050	* 8050	* 7500	6050	* 5600	* 5600	9340
240									* 17600	17550	* 14450	12950	* 12350	* 12350	370
4500							* 9800	* 9800	* 8800	7900	* 8250	5950	* 5650	5100	9840
180							* 21250	* 21250	* 19150	17050	* 18000	12750	* 12400	11300	390
3000					* 15400	* 15400	* 11650	10550	* 9800	7600	* 8750	5800	* 5800	4800	10100
120					* 33100	* 33100	* 25200	22750	* 21250	16400	18950	12450	* 12750	10600	400
1500					* 18600	15000	* 13400	10000	* 10800	7300	8650	5600	* 6150	4700	10130
60					* 40050	32350	* 28950	21550	* 23400	15700	18600	12050	* 13500	10350	400
0			* 8250	* 8250	* 20250	14400	* 14600	9600	11050	7050	8500	5500	* 6700	4750	9930
0			* 18750	* 18750	* 43800	31000	* 31650	20650	23800	15200	18250	11800	* 14750	10500	390
-1500	* 8650	* 8650	* 12900	* 12900	* 20500	14150	* 15100	9350	10900	6900	8400	5400	* 7600	5050	9490
-60	* 19250	* 19250	* 29150	* 29150	* 44400	30500	* 32650	20200	23450	14850	18100	11650	* 16800	11100	380
-3000	* 13650	* 13650	* 18800	* 18800	* 19650	14200	* 14750	9300	10900	6900			8750	5650	8770
-120	* 30550	* 30550	* 42550	* 42550	* 42500	30500	* 31850	20100	23400	14800			19350	12450	350
-4500	* 19600	* 19600	* 24300	* 24300	* 17500	14400	* 13300	9450	* 10000	7000			* 9550	6800	7690
-180	* 44050	* 44050	* 52400	* 52400	* 37750	30950	* 28500	20350	* 21000	15150			* 21000	15150	300
-6000					* 13400	* 13400	* 9500	* 9500					* 9300	* 9300	6060
-240					* 28200	* 28200							* 20400	* 20400	240

Illustration 271 g06281785

336: 7560 kg (16667 lb) counterweight, 6.5 m (21 ft 4 inch) reach boom, 3.9 m (12 ft 10 inch) stick, 700 mm (28 inch) TG track shoes heavy lift ON.

(mm) (inch)	1500 60		3000 120		4500 180		6000 240		7500 300		9000 360				(mm) (inch)
9000													* 5650	* 5650	7350
360													* 12600	* 12600	290
7500									* 7000	* 7000			* 5250	* 5250	8540
300									* 15400	* 15400			* 11650	* 11650	340
6000									* 7250	* 7250	* 6850	6100	* 5100	* 5100	9340
240									* 15900	* 15900	* 13150	13050	* 11250	* 11250	370
4500							* 8900	* 8900	* 7950	* 7950	* 7400	6000	* 5150	* 5150	9840
180							* 19250	* 19250	* 17300	17200	* 16200	12900	* 11250	* 11250	390
3000					* 13950	* 13950	* 10550	* 10550	* 8850	7700	* 7850	5850	* 5300	4850	10100
120					* 29950	* 29950	* 22800	* 22800	* 19200	16550	* 17150	12550	* 11600	10700	400
1500					* 16800	15150	* 12100	10100	* 9750	7350	* 8350	5650	* 5600	4750	10130
60					* 36250	32650	* 26150	21750	* 21100	15850	* 18150	12200	* 12300	10450	400
0			* 7750	* 7750	* 18300	14550	* 13200	9700	* 10400	7100	8600	5550	* 6100	4800	9930
0			* 17650	* 17650	* 39600	31300	* 28550	20850	* 22550	15350	18450	11900	* 13450	10600	390
-1500	* 8150	* 8150	* 12150	* 12150	* 18500	14300	* 13600	9450	* 10700	7000	8500	5450	* 6950	5100	9490
-60	* 18100	* 18100	* 27450	* 27450	* 40100	30750	* 29500	20400	* 23150	15000	18300	11750	* 15350	11200	380
-3000	* 12900	* 12900	* 17750	* 17750	* 17700	14300	* 13300	9400	* 10400	6950			* 8400	5700	8770
-120	* 28850	* 28850	* 40150	* 40150	* 38350	30800	* 28700	20300	* 22400	14950			* 18500	12550	350
-4500	* 18500	* 18500	* 21900	* 21900	* 15800	14550	* 11950	9550	* 8950	7100			* 8550	6850	7690
-180	* 41600	* 41600	* 47250	* 47250	* 34000	31250	* 25650	20550	* 18850	15300			* 18850	15300	300
-6000					* 12000	* 12000	* 8500	* 8500					* 8350	* 8350	6060
-240					* 25300	* 25300							* 18250	* 18250	240

Illustration 272 g06281791

336: 7560 kg (16667 lb) counterweight, 6.5 m (21 ft 4 inch) reach boom, 3.9 m (12 ft 10 inch) stick, 600 mm (24 inch) DG track shoes.

(mm) (inch)	1500 60		3000 120		4500 180		6000 240		7500 300		9000 360				(mm) (inch)
9000													* 6200	* 6200	7350
360													* 13800	* 13800	290
7500									* 7750	* 7750			* 5800	* 5800	8540
300									* 17050	* 17050			* 12750	* 12750	340
6000									* 8050	* 8050	* 7500	6100	* 5600	* 5600	9340
240									* 17600	* 17600	* 14450	13050	* 12350	* 12350	370
4500							* 9800	* 9800	* 8800	8000	* 8250	6000	* 5650	5150	9840
180							* 21250	* 21250	* 19150	17200	* 18000	12900	* 12400	11400	390
3000					* 15400	* 15400	* 11650	10650	* 9800	7700	* 8750	5850	* 5800	4850	10100
120					* 33100	* 33100	* 25200	22950	* 21250	16550	* 19050	12550	* 12750	10700	400
1500					* 18600	15150	* 13400	10100	* 10800	7350	8750	5650	* 6150	4750	10130
60					* 40050	32650	* 28950	21750	* 23400	15850	18750	12200	* 13500	10450	400
0			* 8250	* 8250	* 20250	14550	* 14600	9700	11200	7100	8600	5550	* 6700	4800	9930
0			* 18750	* 18750	* 43800	31300	* 31650	20850	24050	15350	18450	11900	* 14750	10600	390
-1500	* 8650	* 8650	* 12900	* 12900	* 20500	14300	* 15100	9450	11000	7000	8500	5450	* 7600	5100	9490
-60	* 19250	* 19250	* 29150	* 29150	* 44400	30750	* 32650	20400	23700	15000	18300	11750	* 16800	11200	380
-3000	* 13650	* 13650	* 18800	* 18800	* 19650	14300	* 14750	9400	11000	6950			8850	5700	8770
-120	* 30550	* 30550	* 42550	* 42550	* 42500	30800	* 31850	20300	23650	14950			19550	12550	350
-4500	* 19600	* 19600	* 24300	* 24300	* 17500	14550	* 13300	9550	* 10000	7100			* 9550	6850	7690
-180	* 44050	* 44050	* 52400	* 52400	* 37750	31250	* 28500	20550	* 21000	15300			* 21000	15300	300
-6000					* 13400	* 13400	* 9500	* 9500					* 9300	* 9300	6060
-240					* 28200	* 28200							* 20400	* 20400	240

Illustration 273 g06281793

336: 7560 kg (16667 lb) counterweight, 6.5 m (21 ft 4 inch) reach boom, 3.9 m (12 ft 10 inch) stick, 600 mm (24 inch) DG track shoes heavy lift ON.

6.5 m (21 ft 4 inch) Extreme Service Reach Boom

3.9 m (12 ft 10 inch) Extreme Service Stick

(mm) (inch)	1500 60		3000 120		4500 180		6000 240		7500 300		9000 360				(mm) (inch)
9000													* 5600	* 5600	7350
360													* 12450	* 12450	290
7500									* 6850	* 6850			* 5200	* 5200	8540
300									* 15100	* 15100			* 11450	* 11450	340
6000									* 7100	* 7100	* 6750	6050	* 5050	* 5050	9340
240									* 15550	* 15550	* 13000	12900	* 11100	* 11100	370
4500							* 8750	* 8750	* 7800	* 7800	* 7250	5900	* 5050	* 5050	9840
180							* 18900	* 18900	* 16950	* 16950	* 15850	12700	* 11100	* 11100	390
3000					* 13750	* 13750	* 10350	* 10350	* 8650	7600	* 7700	5750	* 5200	4750	10100
120					* 29500	* 29500	* 22350	* 22350	* 18800	16350	* 16750	12350	* 11450	10500	400
1500					* 16550	15050	* 11900	10000	* 9550	7250	* 8150	5550	* 5550	4650	10130
60					* 35650	32400	* 25700	21500	* 20650	15650	* 17750	11950	* 12150	10250	400
0			* 7700	* 7700	* 18000	14350	* 12950	9550	* 10200	7000	* 8500	5400	* 6050	4700	9930
0			* 17500	* 17500	* 38900	30900	* 28000	20550	* 22100	15100	18300	11650	* 13300	10350	390
-1500	* 8050	* 8050	* 12100	* 12100	* 18200	14100	* 13350	9300	* 10450	6850	8400	5350	* 6900	5000	9490
-60	* 17950	* 17950	* 27300	* 27300	* 39400	30350	* 28900	20050	* 22650	14750	18100	11500	* 15150	11000	380
-3000	* 12800	* 12800	* 17700	* 17700	* 17400	14150	* 13000	9250	* 10150	6800			* 8200	5550	8770
-120	* 28650	* 28650	* 40000	* 40000	* 37650	30400	* 28150	19950	* 21900	14700			* 18050	12300	350
-4500	* 18450	* 18450	* 21500	* 21500	* 15500	14350	* 11700	9400	* 8750	6950			* 8350	6750	7690
-180	* 41450	* 41450	* 46300	* 46300	* 33350	30900	* 25100	20250	* 18400	15050			* 18400	15050	300
-6000					* 11700	* 11700	* 8250	* 8250					* 8100	* 8100	6060
-240					* 24650	* 24650							* 17750	* 17750	240

Illustration 274 g06282311

336: 7560 kg (16667 lb) counterweight, 6.5 m (21 ft 4 inch) extreme service reach boom, 3.9 m (12 ft 10 inch) extreme service stick, 800 mm (31 inch) TG track shoes.

(mm) (inch)	1500 60		3000 120		4500 180		6000 240		7500 300		9000 360				(mm) (inch)
9000													* 6150	* 6150	7350
360													* 13650	* 13650	290
7500									* 7600	* 7600			* 5700	* 5700	8540
300									* 16750	* 16750			* 12600	* 12600	340
6000									* 7900	* 7900	* 7400	6050	* 5550	* 5550	9340
240									* 17250	* 17250	* 14300	12900	* 12200	* 12200	370
4500							* 9650	* 9650	* 8650	7950	* 8050	5900	* 5550	5100	9840
180							* 20950	* 20950	* 18800	17050	* 17650	12700	* 12200	11200	390
3000					* 15200	* 15200	* 11450	10550	* 9600	7600	* 8550	5750	* 5750	4750	10100
120					* 32600	* 32600	* 24800	22800	* 20900	16350	* 18650	12350	* 12600	10500	400
1500					* 18300	15050	* 13200	10000	* 10600	7250	8650	5550	* 6050	4650	10130
60					* 39450	32400	* 28500	21500	* 22950	15650	18650	11950	* 13350	10250	400
0			* 8150	* 8150	* 19950	14350	* 14350	9550	11100	7000	8500	5400	* 6650	4700	9930
0			* 18600	* 18600	* 43100	30900	* 31100	20550	23900	15100	18300	11650	* 14600	10350	390
-1500	* 8550	* 8550	* 12850	* 12850	* 20200	14100	* 14850	9300	10950	6850	8400	5350	* 7550	5000	9490
-60	* 19050	* 19050	* 28950	* 28950	* 43700	30350	* 32100	20050	23550	14750	18100	11500	* 16650	11000	380
-3000	* 13600	* 13600	* 18750	* 18750	* 19300	14150	* 14450	9250	10900	6800			8750	5550	8770
-120	* 30400	* 30400	* 42400	* 42400	* 41800	30400	* 31300	19950	23450	14700			19400	12300	350
-4500	* 19550	* 19550	* 23900	* 23900	* 17200	14350	* 13050	9400	* 9750	6950			* 9350	6750	7690
-180	* 43900	* 43900	* 51500	* 51500	* 37100	30900	* 27950	20250	* 20550	15050			* 20550	15050	300
-6000					* 13100	* 13100	* 9250	* 9250					* 9100	* 9100	6060
-240					* 27600	* 27600							* 19900	* 19900	240

Illustration 275 g06282567

336: 7560 kg (16667 lb) counterweight, 6.5 m (21 ft 4 inch) extreme service reach boom, 3.9 m (12 ft 10 inch) extreme service stick, 800 mm (31 inch) TG track shoes heavy lift ON.

(mm) (inch)	1500 60		3000 120		4500 180		6000 240		7500 300		9000 360				(mm) (inch)
9000													* 5600	* 5600	7350
360													* 12450	* 12450	290
7500									* 6850	* 6850			* 5200	* 5200	8540
300									* 15100	* 15100			* 11450	* 11450	340
6000									* 7100	* 7100	* 6750	6100	* 5050	* 5050	9340
240									* 15550	* 15550	* 13000	* 13000	* 11100	* 11100	370
4500							* 8750	* 8750	* 7800	* 7800	* 7250	6000	* 5050	* 5050	9840
180							* 18900	* 18900	* 16950	* 16950	* 15850	12900	* 11100	* 11100	390
3000					* 13750	* 13750	* 10350	* 10350	* 8650	7700	* 7700	5850	* 5200	4850	10100
120					* 29500	* 29500	* 22350	* 22350	* 18800	16600	* 16750	12550	* 11450	10650	400
1500					* 16550	15250	* 11900	10100	* 9550	7400	* 8150	5650	* 5550	4750	10130
60					* 35650	32800	* 25700	21800	* 20650	15900	* 17750	12150	* 12150	10400	400
0			* 7700	* 7700	* 18000	14550	* 12950	9700	* 10200	7100	* 8500	5500	* 6050	4800	9930
0			* 17500	* 17500	* 38900	31350	* 28000	20850	* 22100	15300	* 18450	11850	* 13300	10550	390
-1500	* 8050	* 8050	* 12100	* 12100	* 18200	14350	* 13350	9450	* 10450	6950	* 8500	5450	* 6900	5050	9490
-60	* 17950	* 17950	* 27300	* 27300	* 39400	30800	* 28900	20350	* 22650	15000	* 18400	11700	* 15150	11150	380
-3000	* 12800	* 12800	* 17700	* 17700	* 17400	14350	* 13000	9400	* 10150	6900			* 8200	5650	8770
-120	* 28650	* 28650	* 40000	* 40000	* 37650	30800	* 28150	20250	* 21900	14900			* 18050	12500	350
-4500	* 18450	* 18450	* 21500	* 21500	* 15500	14550	* 11700	9550	* 8750	7050			* 8350	6850	7690
-180	* 41450	* 41450	* 46300	* 46300	* 33350	31300	* 25100	20550	* 18400	15300			* 18400	15300	300
-6000					* 11700	* 11700	* 8250	* 8250					* 8100	* 8100	6060
-240					* 24650	* 24650							* 17750	* 17750	240

Illustration 276 g06282316

336: 7560 kg (16667 lb) counterweight, 6.5 m (21 ft 4 inch) extreme service reach boom, 3.9 m (12 ft 10 inch) extreme service stick, 800 mm (31 inch) heavy-duty TG track shoes.

(mm) (inch)	1500 60		3000 120		4500 180		6000 240		7500 300		9000 360				(mm) (inch)
9000													* 6150	* 6150	7350
360													* 13650	* 13650	290
7500									* 7600	* 7600			* 5700	* 5700	8540
300									* 16750	* 16750			* 12600	* 12600	340
6000									* 7900	* 7900	* 7400	6100	* 5550	* 5550	9340
240									* 17250	* 17250	* 14300	13050	* 12200	* 12200	370
4500							* 9650	* 9650	* 8650	8050	* 8050	6000	* 5550	5150	9840
180							* 20950	* 20950	* 18800	17300	* 17650	12900	* 12200	11400	390
3000					* 15200	* 15200	* 11450	10700	* 9600	7700	* 8550	5850	* 5750	4850	10100
120					* 32600	* 32600	* 24800	23100	* 20900	16600	* 18650	12550	* 12600	10650	400
1500					* 18300	15250	* 13200	10100	* 10600	7400	8800	5650	* 6050	4750	10130
60					* 39450	32800	* 28500	21800	* 22950	15900	18900	12150	* 13350	10400	400
0			* 8150	* 8150	* 19950	14550	* 14350	9700	11300	7100	8650	5500	* 6650	4800	9930
0			* 18600	* 18600	* 43100	31350	* 31100	20850	24250	15300	18550	11850	* 14600	10550	390
-1500	* 8550	* 8550	* 12850	* 12850	* 20200	14350	* 14850	9450	11100	6950	8550	5450	* 7550	5050	9490
-60	* 19050	* 19050	* 28950	* 28950	* 43700	30800	* 32100	20350	23900	15000	18400	11700	* 16650	11150	380
-3000	* 13600	* 13600	* 18750	* 18750	* 19300	14350	* 14450	9400	11050	6900			8900	5650	8770
-120	* 30400	* 30400	* 42400	* 42400	* 41800	30800	* 31300	20250	23850	14900			19700	12500	350
-4500	* 19550	* 19550	* 23900	* 23900	* 17200	14550	* 13050	9550	* 9750	7050			* 9350	6850	7690
-180	* 43900	* 43900	* 51500	* 51500	* 37100	31300	* 27950	20550	* 20550	15300			* 20550	15300	300
-6000					* 13100	* 13100	* 9250	* 9250					* 9100	* 9100	6060
-240					* 27600	* 27600							* 19900	* 19900	240

Illustration 277 g06282317

336: 7560 kg (16667 lb) counterweight, 6.5 m (21 ft 4 inch) extreme service reach boom, 3.9 m (12 ft 10 inch) extreme service stick, 800 mm (31 inch) heavy-duty TG track shoes heavy lift ON.

(mm) (inch)	1500 60		3000 120		4500 180		6000 240		7500 300		9000 360				(mm) (inch)
9000													* 5600	* 5600	7350
360													* 12450	* 12450	290
7500									* 6850	* 6850			* 5200	* 5200	8540
300									* 15100	* 15100			* 11450	* 11450	340
6000									* 7100	* 7100	* 6750	5950	* 5050	* 5050	9340
240									* 15550	* 15550	* 13000	12700	* 11100	* 11100	370
4500							* 8750	* 8750	* 7800	* 7800	* 7250	5850	* 5050	5000	9840
180							* 18900	* 18900	* 16950	16800	* 15850	12500	* 11100	11050	390
3000					* 13750	* 13750	* 10350	* 10350	* 8650	7500	* 7700	5650	* 5200	4700	10100
120					* 29500	* 29500	* 22350	* 22350	* 18800	16100	* 16750	12150	* 11450	10350	400
1500					* 16550	14800	* 11900	9850	* 9550	7150	* 8150	5500	* 5550	4600	10130
60					* 35650	31900	* 25700	21200	* 20650	15400	* 17750	11800	* 12150	10050	400
0			* 7700	* 7700	* 18000	14150	* 12950	9400	* 10200	6900	8350	5350	* 6050	4650	9930
0			* 17500	* 17500	* 38900	30450	* 28000	20250	* 22100	14850	18000	11450	* 13300	10200	390
-1500	* 8050	* 8050	* 12100	* 12100	* 18200	13900	* 13350	9150	* 10450	6750	8300	5250	* 6900	4900	9490
-60	* 17950	* 17950	* 27300	* 27300	* 39400	29900	* 28900	19750	* 22650	14500	17800	11300	* 15150	10800	380
-3000	* 12800	* 12800	* 17700	* 17700	* 17400	13900	* 13000	9100	* 10150	6700			* 8200	5500	8770
-120	* 28650	* 28650	* 40000	* 40000	* 37650	29900	* 28150	19650	* 21900	14450			* 18050	12100	350
-4500	* 18450	* 18450	* 21500	* 21500	* 15500	14150	* 11700	9250	* 8750	6850			* 8350	6650	7690
-180	* 41450	* 41450	* 46300	* 46300	* 33350	30400	* 25100	19950	* 18400	14800			* 18400	14800	300
-6000					* 11700	* 11700	* 8250	* 8250					* 8100	* 8100	6060
-240					* 24650	* 24650							* 17750	* 17750	240

Illustration 278 g06282301

336: 7560 kg (16667 lb) counterweight, 6.5 m (21 ft 4 inch) extreme service reach boom, 3.9 m (12 ft 10 inch) extreme service stick, 700 mm (28 inch) TG track shoes.

(mm) (inch)	1500 60		3000 120		4500 180		6000 240		7500 300		9000 360				(mm) (inch)
9000													* 6150	* 6150	7350
360													* 13650	* 13650	290
7500									* 7600	* 7600			* 5700	* 5700	8540
300									* 16750	* 16750			* 12600	* 12600	340
6000									* 7900	* 7900	* 7400	5950	* 5550	* 5550	9340
240									* 17250	* 17250	* 14300	12700	* 12200	* 12200	370
4500							* 9650	* 9650	* 8650	7800	* 8050	5850	* 5550	5000	9840
180							* 20950	* 20950	* 18800	16800	* 17650	12500	* 12200	11050	390
3000					* 15200	* 15200	* 11450	10450	* 9600	7500	* 8550	5650	* 5750	4700	10100
120					* 32600	* 32600	* 24800	22450	* 20900	16100	* 18650	12150	* 12600	10350	400
1500					* 18300	14800	* 13200	9850	* 10600	7150	8500	5500	* 6050	4600	10130
60					* 39450	31900	* 28500	21200	* 22950	15400	18300	11800	* 13350	10050	400
0			* 8150	* 8150	* 19950	14150	* 14350	9400	10950	6900	8350	5350	* 6650	4650	9930
0			* 18600	* 18600	* 43100	30450	* 31100	20250	23500	14850	18000	11450	* 14600	10200	390
-1500	* 8550	* 8550	* 12850	* 12850	* 20200	13900	* 14850	9150	10750	6750	8300	5250	* 7550	4900	9490
-60	* 19050	* 19050	* 28950	* 28950	* 43700	29900	* 32100	19750	23150	14500	17800	11300	* 16650	10800	380
-3000	* 13600	* 13600	* 18750	* 18750	* 19300	13900	* 14450	9100	10700	6700			8600	5500	8770
-120	* 30400	* 30400	* 42400	* 42400	* 41800	29900	* 31300	19650	23100	14450			19050	12100	350
-4500	* 19550	* 19550	* 23900	* 23900	* 17200	14150	* 13050	9250	* 9750	6850			* 9350	6650	7690
-180	* 43900	* 43900	* 51500	* 51500	* 37100	30400	* 27950	19950	* 20550	14800			* 20550	14800	300
-6000					* 13100	* 13100	* 9250	* 9250					* 9100	* 9100	6060
-240					* 27600	* 27600							* 19900	* 19900	240

Illustration 279 g06282304

336: 7560 kg (16667 lb) counterweight, 6.5 m (21 ft 4 inch) extreme service reach boom, 3.9 m (12 ft 10 inch) extreme service stick, 700 mm (28 inch) TG track shoes heavy lift ON.

(mm) (inch)	1500 60		3000 120		4500 180		6000 240		7500 300		9000 360				
kg / Lb															(mm) (inch)
9000													* 5600	* 5600	7350
360													* 12450	* 12450	290
7500									* 6850	* 6850			* 5200	* 5200	8540
300									* 15100	* 15100			* 11450	* 11450	340
6000									* 7100	* 7100	* 6750	6000	* 5050	* 5050	9340
240									* 15550	* 15550	* 13000	12800	* 11100	* 11100	370
4500							* 8750	* 8750	* 7800	* 7800	* 7250	5900	* 5050	5050	9840
180							* 18900	* 18900	* 16950	* 16950	* 15850	12650	* 11100	* 11100	390
3000					* 13750	* 13750	* 10350	* 10350	* 8650	7550	* 7700	5700	* 5200	4750	10100
120					* 29500	* 29500	* 22350	* 22350	* 18800	16250	* 16750	12300	* 11450	10450	400
1500					* 16550	14950	* 11900	9900	* 9550	7250	* 8150	5550	* 5550	4600	10130
60					* 35650	32200	* 25700	21400	* 20650	15550	* 17750	11900	* 12150	10150	400
0			* 7700	* 7700	* 18000	14300	* 12950	9500	* 10200	6950	8450	5400	* 6050	4700	9930
0			* 17500	* 17500	* 38900	30750	* 28000	20450	* 22100	15000	18150	11600	* 13300	10300	390
-1500	* 8050	* 8050	* 12100	* 12100	* 18200	14050	* 13350	9250	* 10450	6800	8350	5300	* 6900	4950	9490
-60	* 17950	* 17950	* 27300	* 27300	* 39400	30200	* 28900	19950	* 22650	14650	18000	11450	* 15150	10900	380
-3000	* 12800	* 12800	* 17700	* 17700	* 17400	14050	* 13000	9200	* 10150	6800			* 8200	5550	8770
-120	* 28650	* 28650	* 40000	* 40000	* 37650	30200	* 28150	19850	* 21900	14600			* 18050	12250	350
-4500	* 18450	* 18450	* 21500	* 21500	* 15500	14250	* 11700	9350	* 8750	6900			* 8350	6700	7690
-180	* 41450	* 41450	* 46300	* 46300	* 33350	30700	* 25100	20150	* 18400	14950			* 18400	14950	300
-6000					* 11700	* 11700	* 8250	* 8250					* 8100	* 8100	6060
-240					* 24650	* 24650							* 17750	* 17750	240

Illustration 280 g06282314

336: 7560 kg (16667 lb) counterweight, 6.5 m (21 ft 4 inch) extreme service reach boom, 3.9 m (12 ft 10 inch) extreme service stick, 600 mm (24 inch) DG track shoes.

(mm) (inch)	1500 60		3000 120		4500 180		6000 240		7500 300		9000 360				
kg / Lb															(mm) (inch)
9000													* 6150	* 6150	7350
360													* 13650	* 13650	290
7500									* 7600	* 7600			* 5700	* 5700	8540
300									* 16750	* 16750			* 12600	* 12600	340
6000									* 7900	* 7900	* 7400	6000	* 5550	* 5550	9340
240									* 17250	* 17250	* 14300	12800	* 12200	* 12200	370
4500							* 9650	* 9650	* 8650	7900	* 8050	5900	* 5550	5050	9840
180							* 20950	* 20950	* 18800	17000	* 17650	12650	* 12200	11150	390
3000					* 15200	* 15200	* 11450	10500	* 9600	7550	* 8550	5700	* 5750	4750	10100
120					* 32600	* 32600	* 24800	22650	* 20900	16250	* 18650	12300	* 12600	10450	400
1500					* 18300	14950	* 13200	9900	* 10600	7250	8600	5550	* 6050	4600	10130
60					* 39450	32200	* 28500	21400	* 22950	15550	18500	11900	* 13350	10150	400
0			* 8150	* 8150	* 19950	14300	* 14350	9500	11050	6950	8450	5400	* 6650	4700	9930
0			* 18600	* 18600	* 43100	30750	* 31100	20450	23750	15000	18150	11600	* 14600	10300	390
-1500	* 8550	* 8550	* 12850	* 12850	* 20200	14050	* 14850	9250	10850	6800	8350	5300	* 7550	4950	9490
-60	* 19050	* 19050	* 28950	* 28950	* 43700	30200	* 32100	19950	23400	14650	18000	11450	* 16650	10900	380
-3000	* 13600	* 13600	* 18750	* 18750	* 19300	14050	* 14450	9200	10850	6800			8700	5550	8770
-120	* 30400	* 30400	* 42400	* 42400	* 41800	30200	* 31300	19850	23300	14600			19300	12250	350
-4500	* 19550	* 19550	* 23900	* 23900	* 17200	14250	* 13050	9350	* 9750	6900			* 9350	6700	7690
-180	* 43900	* 43900	* 51500	* 51500	* 37100	30700	* 27950	20150	* 20550	14950			* 20550	14950	300
-6000					* 13100	* 13100	* 9250	* 9250					* 9100	* 9100	6060
-240					* 27600	* 27600							* 19900	* 19900	240

Illustration 281 g06282315

336: 7560 kg (16667 lb) counterweight, 6.5 m (21 ft 4 inch) extreme service reach boom, 3.9 m (12 ft 10 inch) extreme service stick, 600 mm (24 inch) DG track shoes heavy lift ON.

Identification Information

i08267043

Plate Locations and Film Locations

SMCS Code: 1000; 7000

The Product Identification Number (PIN) will be used to identify a powered machine that is designed for an operator to ride.

Cat ® products such as engines, transmissions, and major attachments that are not designed for an operator to ride are identified by Serial Numbers.

For quick reference, record the identification numbers in the spaces that are provided below the illustration.

Product Identification Number (PIN) Plate

Illustration 282 g06276619

The PIN plate is positioned on the front of the machine, close to the operator compartment.

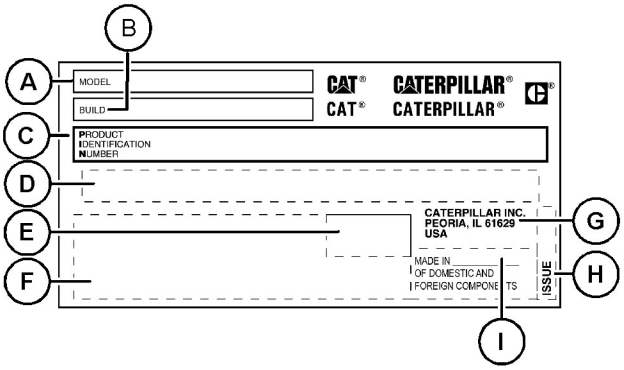

Illustration 283 g06201159

Manufacturer Name and Address _____

Model (A)_____

Build (B)_____

Product Identification Number (C)_____

Bar Code (D)_____

Month and Year of Manufacture Plate (If Required) (E)_____

Regional Certification Plate (If Required) (F)_____

Address of Manufacturer (G)_____

Issue (H)_____

Country of Origin Info Plate (If Required) (I)_____

Local regulation may require documentation of the month and/or year of manufacture in the Operation and Maintenance Manual. Comply with these regulations

European Union

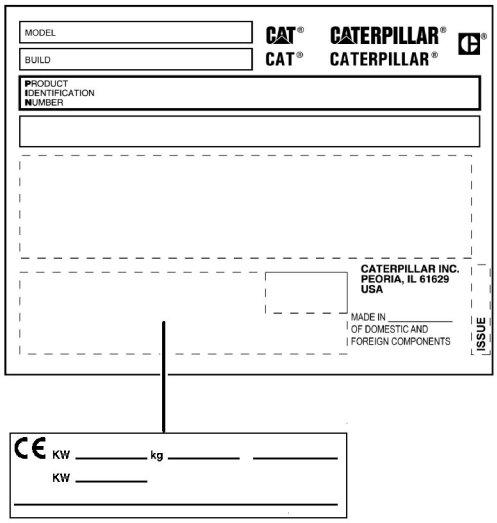

Illustration 284 g06201193

This plate is positioned on the bottom-left side of the plate for the PIN.

Note: The CE plate is on machines that are certified to the European Union requirements that were effective then.

For machines compliant to 2006/42/EC, the following information is stamped onto the CE plate. For quick reference, record this information in the spaces that are provided below.

- Engine Power Primary Engine (kW)_____
- Engine Power for Additional Engine (kW) (If Equipped) _____
- Typical Machine Operating Weight for European Market (kg)_____
- Year of Construction_____
- Machine Type _____

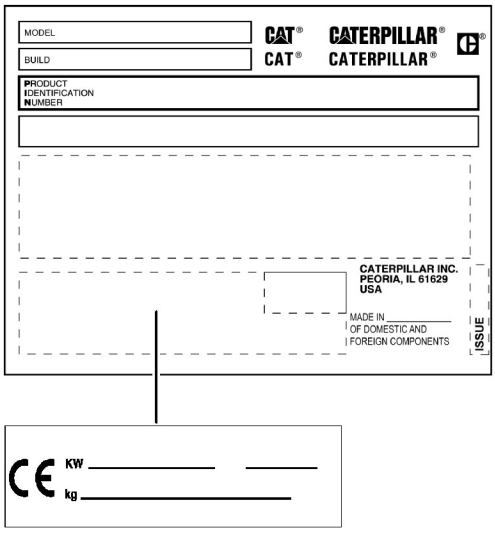

Illustration 285 g06201198

This plate is positioned on the bottom-left side of the plate for the PIN.

Note: The CE plate is on machines that are certified to the European Union requirements that were effective then.

For machines compliant to 98/37/EC and 89/392/EEC, the following information is stamped onto the CE plate. For quick reference, record this information in the spaces that are provided below.

- Engine Power Primary Engine (kW)_____
- Typical Machine Operating Weight for European Market (kg)_____
- Year_____

For manufacturer name and address and the country of origin, see the PIN plate.

Eurasian Economic Union

For machines compliant to the Eurasian Economic Union requirements, the EAC plate is positioned on or near the Product Identification Number (PIN) plate (see Product Information Section of the machine Operation and Maintenance Manual). The EAC plate is placed on machines certified to the Eurasian Economic Union requirements effective at the time of market entry.

Note: One of the below plates may be installed on the machine.

Illustration 286 g06094564

If equipped, the Month and Year of Manufacture are on the PIN plate.

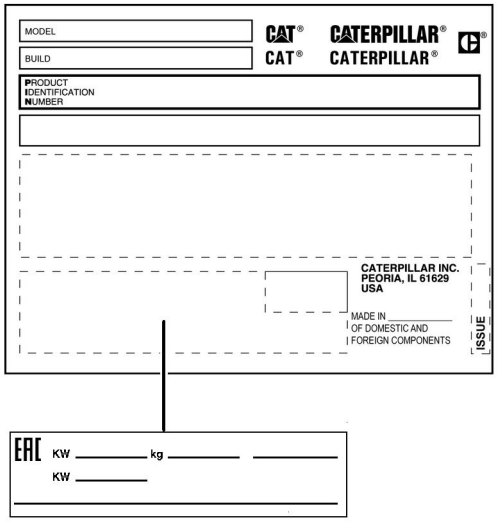

Illustration 287 g06532250

If equipped, the following information is stamped onto the EAC plate. For quick reference, record this information in the spaces provided below.

- Primary Engine Power (kW)_____
- Additional Engine Power (kW) _____
- Typical Machine Operating Weight for Eurasian Economic Union (kg)_____
- Month and Year of Manufacture_____
- Machine Type _____

Manufacturer Information

Manufacturer:

Caterpillar Inc.,
100 N.E. Adams Street
Peoria, Illinois 61629, USA

Entity authorized by the manufacturer at the territory of Eurasian Economic Union:

Caterpillar Eurasia LLC
75, Sadovnicheskaya Emb.
Moscow 115035, Russia

Machine Specification Film

The machine specification film is on machines that are going into Japan.

The Japanese Industrial Safety and Health Act requires machine specifications to be displayed on a film that can easily be seen by the operator.

If equipped, this film will be on the cab door.

Illustration 288 g06178867

Typical example

Electromagnetic Emissions

Note: This label is on machines that are going into Canada.

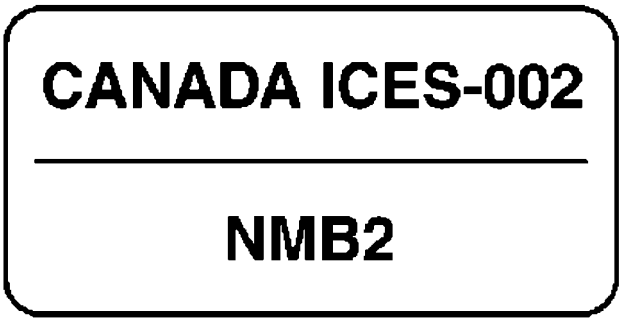

Illustration 289 g06063443

If equipped, this label is located next to the PIN plate. This label verifies that the product meets the requirements of ICES-002 Issue 6. Compliance to ICES-002 Issue 6 is accomplished by meeting electromagnetic emissions industry standard CISPR-12.

Engine Serial Number

This label is on the engine.

Engine Serial Number _____

Sound Certification Film

If equipped, this label is on the cab door.

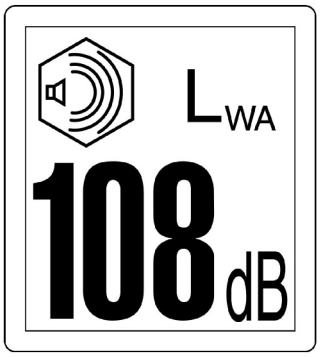

Illustration 290 g02409196

A typical example of this film is shown. Your machine may have a different value

If equipped, this label will be on the cab door. The certification label is used to verify the environmental sound certification of the machine to the requirements of the European Union. The value that is listed on the label indicates the guaranteed exterior sound power level L_{WA} at the time of manufacture for the conditions that are specified in “2000/14/EC”.

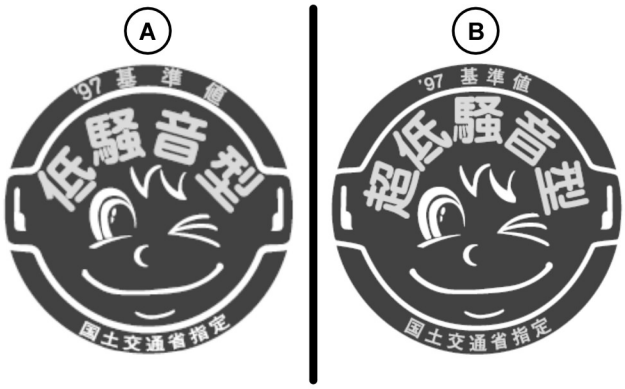

Illustration 291 g03105800

(A) Low Noise Film
(B) Super Low Noise Film

If equipped, these certification labels are used to verify the Japan Ministry of Land, Infrastructure, Transportation, and Tourism (MLIT) noise designation according to the Japan “Designation Rule of Low Noise Type Construction Machine” .

Low Noise (A) – Verifies that the Japan “MLIT” designates the machine as a “Low Noise” type construction machine.

Super Low Noise (B) – Verifies that the Japan “MLIT” designates the machine as a “Super Low Noise” type construction machine.

i05757951

Emissions Certification Film

SMCS Code: 1000; 7000; 7405

Note: This information is pertinent in Japan.

Illustration 292 g03654940

2014 certification label example

A certification label is located on the cab door.

The certification label verifies that the machine conforms to the 2014 Japan Nonroad Special Motor Vehicle Exhaust Regulation.

i08085827

Emissions Certification Film

SMCS Code: 1000; 7000; 7405

Consult your Cat dealer for an Emission Control Warranty Statement.

The emission certification film is on the engine.

Declaration of Conformity

SMCS Code: 1000; 7000

Table 18

An EU Declaration of Conformity document was provided with the machine if it was manufactured to comply with specific requirements for the European Union. In order to determine the details of the applicable Directives, review the complete EU Declaration of Conformity provided with the machine. The extract shown below from an EU Declaration of Conformity for machines that are declared compliant to “2006/42/EC” applies only to those machines originally “CE” marked by the manufacturer listed and which have not since been modified.

ORIGINAL EU DECLARATION OF CONFORMITY

Manufacturer: Caterpillar Inc., 100 N.E. Adams Street, Peoria, Illinois 61629, USA

Person authorized to compile the Technical File and to communicate relevant part (s) of the Technical File to the Authorities of European Union Member States on request:

Standards & Regulations Manager, Caterpillar France S.A.S
40 Avenue Leon-Blum 38000 Grenoble, France

I, the undersigned, _____, hereby certify that the construction equipment specified hereunder

Description:	Generic Denomination:	Earth-moving Equipment
	Function:	Hydraulic Excavator
	Model/Type:	336
	Serial Number:	
	Commercial Name:	Caterpillar

Fulfills all the relevant provisions of the following Directives

Directives	Notified Body	Document No.
2000/14/EC amended by 2005/88/EC, Note (1)		
2006/42/EC	N/A	
2014/30/EU	N/A	

Note (1) Guaranteed Sound Power Level -_____dB (A) Annex VI
Representative Equipment Type Sound Power Level - _____dB (A)
[Engine Power per ISO 14396 -____ kW, Rated engine speed - _____ rpm
Technical Documentation accessible through person listed above authorized to compile the Technical File
Harmonised standards taken into consideration: EN 474-1: 2006+A4 :2013+AC:2014;
EN 474-5: 2006+A3: 2013
EN 13309: 2010

Done at: **Signature**

Date: **Name/Position**

Note: The above information was correct as of **September 2018**, but may be subject to change, please refer to the individual declaration of conformity issued with the machine for exact details.

Operation Section

Before Operation

i07103304

Mounting and Dismounting

SMCS Code: 6700; 7000

Illustration 293 g06224270
Typical example

Mount the machine and dismount the machine only at locations that have steps and/or handholds. Before you mount the machine, clean the steps and the handholds. Inspect the steps and handholds. Make all necessary repairs.

Face the machine whenever you get on the machine and whenever you get off the machine.

Maintain a three-point contact with the steps and with the handholds.

Note: Three-point contact can be two feet and one hand. Three-point contact can also be one foot and two hands.

Do not mount a moving machine. Do not dismount a moving machine. Never jump off the machine. Do not carry tools or supplies when you try to mount the machine or when you try to dismount the machine. Use a hand line to pull equipment onto the platform. Do not use any controls as handholds when you enter the operator compartment or when you exit the operator compartment.

Machine Access System Specifications

The machine access system has been designed to meet the intent of the technical requirements in “ISO 2867 Earth-moving Machinery – Access Systems”. The access system provides for operator access to the operator station and to conduct the maintenance procedures described in Maintenance section.

Alternate Exit

Machines that are equipped with cabs have alternate exits. For additional information, see Operation and Maintenance Manual, “Alternate Exit”.

i07254776

Daily Inspection

SMCS Code: 1000; 6319; 6700; 7000

WARNING

Hot oil and hot components can cause personal injury. Do not allow hot oil or hot components to contact skin.

At operating temperature, the engine coolant is hot and under pressure.

Steam can cause personal injury.

Check the coolant level only after the engine has been stopped and the cooling system pressure cap is cool enough to touch with your bare hand.

Remove the cooling system pressure cap slowly to relieve pressure.

Cooling system conditioner contains alkali. Avoid contact with the skin and eyes to prevent personal injury.

NOTICE
Accumulated grease and oil on a machine is a fire hazard. Remove this debris with steam cleaning or high pressure water, at least every 1000 hours or each time any significant quantity of oil is spilled on a machine.

For maximum service life of the machine, perform a thorough walk-around inspection before you mount the machine and before you start the engine.

First 50 Hours

Daily, perform the procedures that are applicable to your machine:

- Operation and Maintenance Manual, “Boom and Stick Linkage - Lubricate”

- Operation and Maintenance Manual, “Bucket Linkage - Lubricate”

Daily Basis

Daily, perform the procedures that are applicable to your machine:

- Operation and Maintenance Manual, “Cooling System Coolant Level - Check”
- Operation and Maintenance Manual, “Engine Oil Level - Check”
- Operation and Maintenance Manual, “Fuel System Water Separator - Drain”
- Operation and Maintenance Manual, “Fuel Tank Water and Sediment - Drain”
- Operation and Maintenance Manual, “Hydraulic System Oil Level - Check”
- Operation and Maintenance Manual, “Indicators and Gauges - Test”
- Operation and Maintenance Manual, “Seat Belt - Inspect”
- Operation and Maintenance Manual, “Track Adjustment - Inspect”
- Operation and Maintenance Manual, “Travel Alarm - Test”
- Operation and Maintenance Manual, “Undercarriage - Check”

Refer to Operation and Maintenance Manual, “Maintenance Interval Schedule” for all maintenance recommendations.

Note: Watch closely for leaks. If you observe a leak, find the source of the leak and correct the leak. If you suspect a leak or you observe a leak, check the fluid levels more frequently.

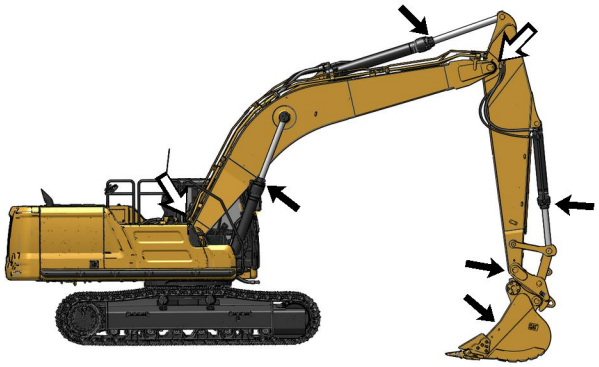

Illustration 294 g06267412

Inspect the attachment control linkage, attachment cylinders, and attachment for damage or excessive wear. Make any necessary repairs.

Inspect the lights for broken bulbs and for broken lenses. Replace any broken bulbs and any broken lenses.

Inspect the engine compartment for any trash buildup. Remove any trash buildup from the engine compartment.

Inspect the cooling system for any leaks, for faulty hoses and for any trash buildup. Correct any leaks. Remove any trash from the radiator.

Inspect all the belts for the engine attachments. Replace any belts that are worn, frayed, or broken.

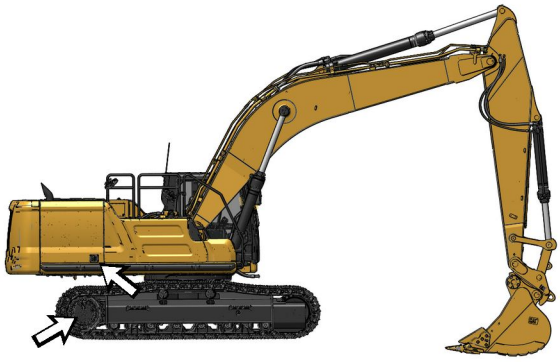

Illustration 295 g06267426

Inspect the hydraulic system for leaks. Inspect the tank, cylinder rod seals, hoses, tubes, plugs, connections, and fittings. Correct any leaks in the hydraulic system.

Inspect the tubes and hoses along the boom and stick for wear and leaks. Replace any hoses or tubes that are worn or leak.

Inspect the differential and the final drives for leaks. Make any necessary repairs.

Inspect the swing drive for leaks.

Make sure that all covers and guards are securely attached. Inspect the covers and the guards for damage.

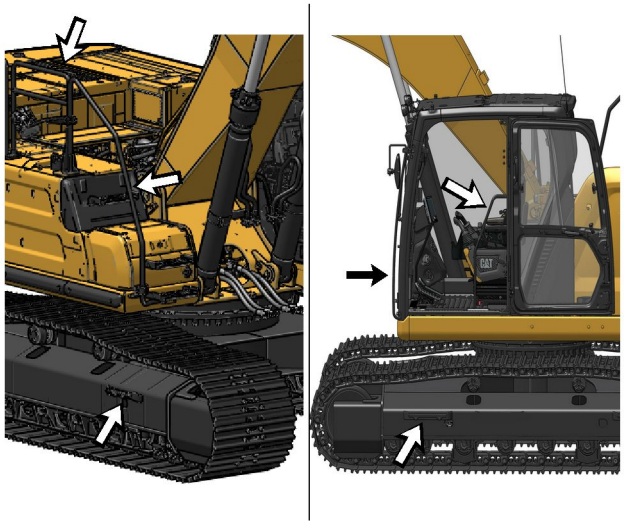

Illustration 296 g06267482

Inspect the steps, the walkways, and the handholds. Clean the steps, the walkways, and the handholds. Make any necessary repairs.

Inspect the operator compartment for trash buildup. Check for trash buildup under the floorplate and on the crankcase guard. Keep these areas clean.

Adjust the mirrors to achieve the best visibility.

Machine Operation

i06952448

Alternate Exit

SMCS Code: 7310

Rear Window with Ring Seal (If Equipped)

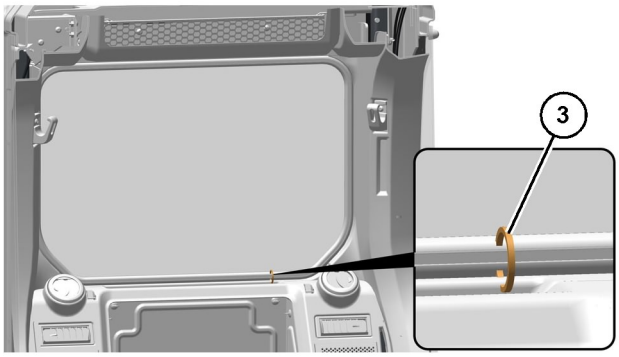

Illustration 297 g06187008

Alternate Exit – The rear window serves as an alternate exit.

To remove the rear window, pull ring (3) and completely remove the window seal, then push out the glass. Climb through the rear window opening to exit the cab.

Rear Window with Lever (If Equipped)

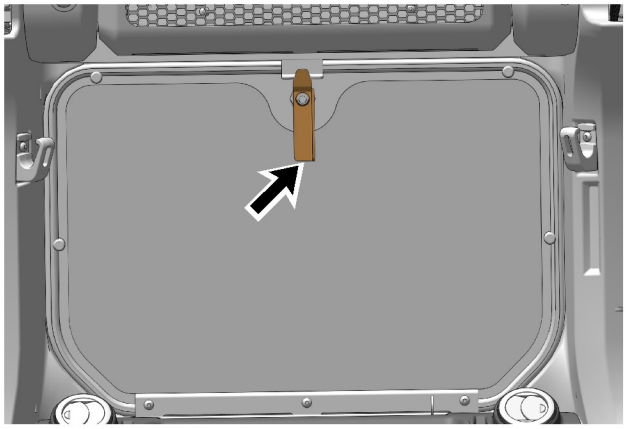

Illustration 298 g06213470

Inside lever in latched position

Alternate Exit – The rear window serves as an alternate exit.

To remove the rear window, rotate handle from its latched position, then push out the glass. Climb through the rear window opening to exit the cab.

Illustration 299 g06213471

The window is also equipped with an outside handle. If the operator is unable, outside personnel can rotate the outside handle and pull the window out.

i07383859

Seat

SMCS Code: 5258-025; 7312-025; 7324; 7327

Comfort Level Seat (If Equipped)

Illustration 300 g06225151

(1) Headrest
(2) Backrest adjuster
(3) Seat and console fore and aft adjuster
(4) Indicator
(5) Seat height adjustment lever
(6) Seat fore and aft lever

The operator can adjust the height of headrest (1). To adjust the headrest, hold the headrest with both hands. Move the headrest up and down. Release the headrest when the desired position is attained. The headrest will remain in the desired position.

Pull up on backrest adjuster (2) to release the lock. Move the backrest to the desired position and then release the adjuster.

Lift up on fore and aft adjuster (3) to release the seat from the locked position. Adjust the seat and console forward or rearward to the desired position and then release the lever to lock the seat.

Use seat height adjustment lever (5) to adjust the seat for the operator's height and weight. Move the adjuster switch to the “+” symbol to raise the height. Ratchet the seat upward without sitting in the seat. Then sit in the seat to check the color of indicator (4). When the indicator is showing green, the seat is in the right range for the operator. Further adjustment can be made as long as the indicator stays green.

To lower the seat, move the adjust switch to the “-” symbol. Ratchet the adjuster downward without sitting in the seat. Then sit in the seat to check the color of indicator (4). When the indicator is showing green, the seat is in the right range for the operator. Further adjustment can be made as long as the indicator stays green.

Pull upward on seat fore and aft lever (6) to release the cushion lock. Adjust the seat cushion forward or backward to the desired position and then release the lock to lock the cushion in place.

Deluxe Level Seat (If Equipped)

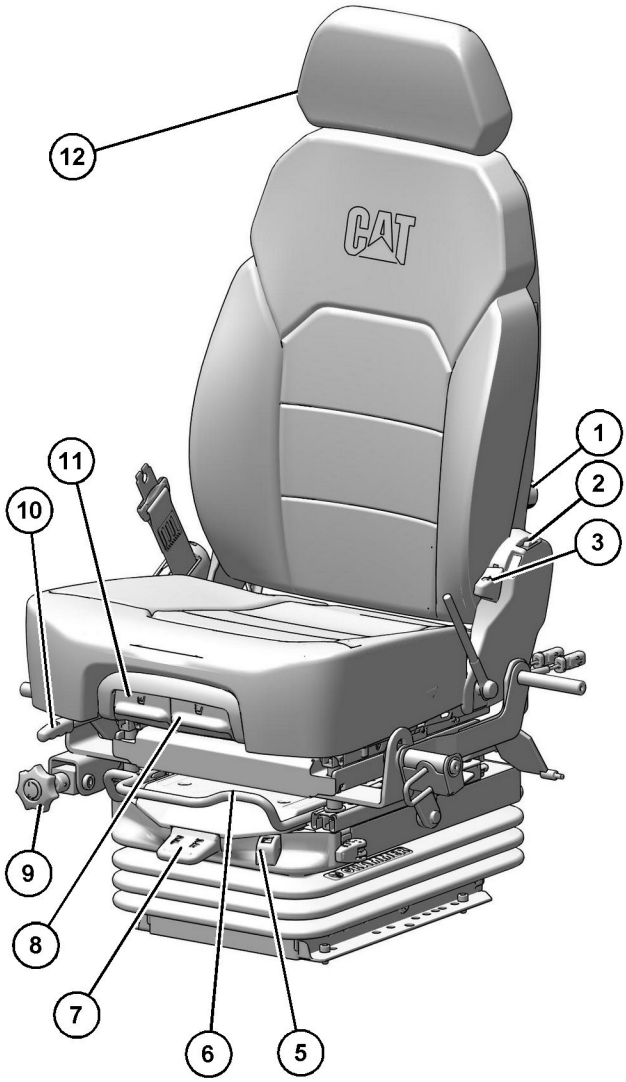

Illustration 301 g06303504

(1) Adjustment lever for the lumbar support
(2) Seat heater switch
(3) Adjustment lever for reclining the seat
(5) Indicator
(6) Seat and console fore and aft lever
(7) Seat height adjustment
(8) Seat cushion angle adjuster
(9) Console height adjustment
(10) Seat fore and aft adjuster
(11) Seat cushion fore and aft adjuster
(12) Headrest

The lumbar support is located in the back of the seat. Turn knob (1) (if equipped) counterclockwise to increase the force of the lumbar support. To decrease the lumbar support, continue to turn the knob counterclockwise.

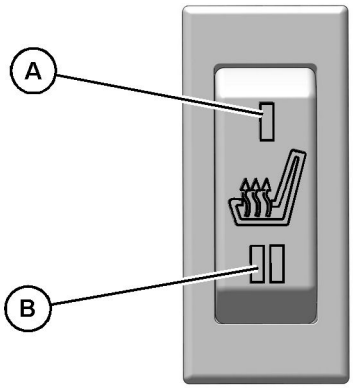

Illustration 302 g06251600

(A) Low heat
(B) High heat

Seat heater switch (2) is a three position switch. The middle position of the switch is off. Press the top position of the switch for low heat. Press the bottom of the switch for high heat.

WARNING

Heat-induced burns can occur when some people use a seat heater. Do not use the seat heater if you have a reduced ability to sense temperature changes, a reduced ability to feel pain, or have sensitive skin.

Pull up lever (3) to change the angle of the backrest. With the backrest in the desired position. Release the lever.

Push in adjuster (11) to adjust the fore/aft position of the seat cushion.

Pull lever (6) to adjust the seat and the console forward and backward.

Operate seat height adjustment (7) to adjust the seat and the console to the desired height. Pull up the lever to raise the height of the seat. Push down on the lever to lower the seat. Indicator (5) will turn green when the seat is at the optimum height for the operator's height and weight. If the indicator is yellow, further adjustment is required.

Note: Do not operate the seat compressor for over a minute or damage can result.

Use handle (9) to adjust the height of the console. When the lever is pulled forward, a gear is released. The operator can rotate the lever freely. Release the lever to return to the original position.

To adjust the seat forward or backward, pull up lever (10) and hold the lever. Move the seat to the desired position. To lock the seat in the selected position, release the lever.

Push the adjuster (8) to adjust the tilt angle of the seat cushion.

The operator can adjust the height of headrest (12). To adjust the headrest, hold the headrest with both hands. Move the headrest up and down. Release the headrest when the desired position is attained. The headrest will remain in the desired position.

Premium Level Seat (If Equipped)

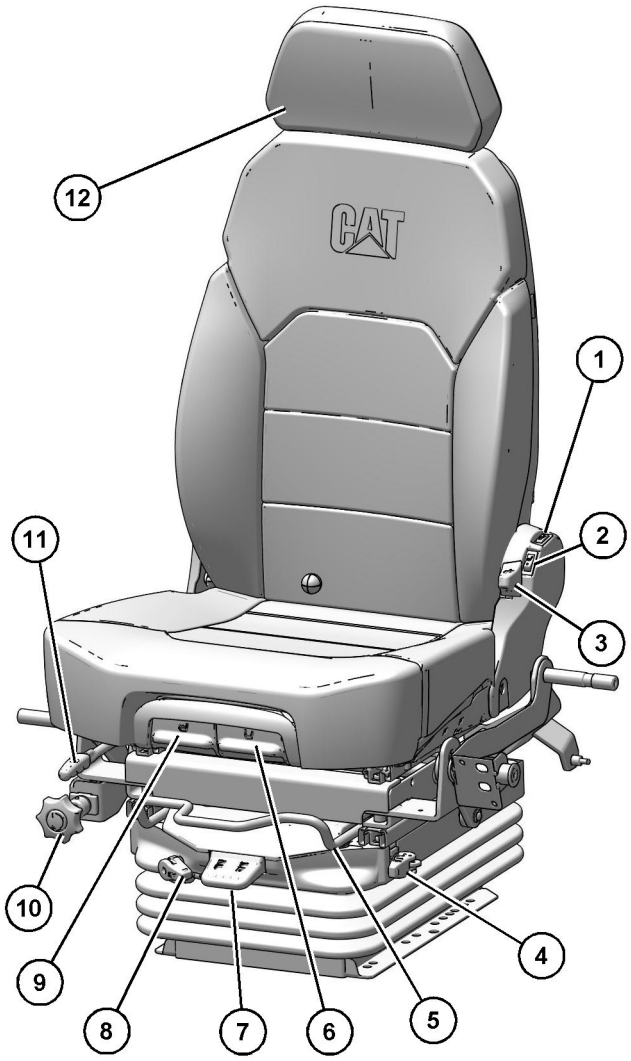

Illustration 303 g06251562

(1) Seat heater switch
(2) Cooling switch
(3) Adjustment lever for reclining the seat
(4) Fore/Aft isolator activate/deactivate lever
(5) Seat and console fore and aft lever
(6) Seat cushion angle adjuster
(7) Seat height adjustment
(8) Adjustable damper
(9) Seat cushion fore and aft adjuster
(10) Console height adjustment
(11) Seat fore and aft adjuster
(12) Headrest

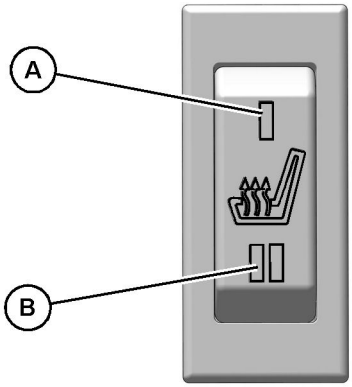

Illustration 304 g06251600

(A) Low heat
(B) High heat

Seat heater switch (1) is a three position switch. The middle position of the switch is off. Press the top position of the switch for low heat. Press the bottom of the switch for high heat.

WARNING

Heat-induced burns can occur when some people use a seat heater. Do not use the seat heater if you have a reduced ability to sense temperature changes, a reduced ability to feel pain, or have sensitive skin.

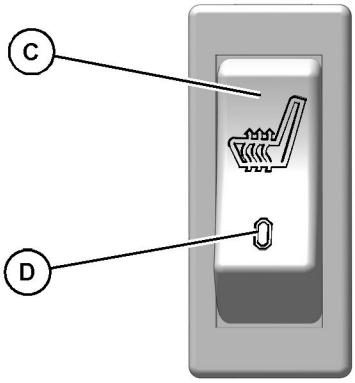

Illustration 305 g06251623

(C) Cooling on
(D) Cooling off

To cool the seat, press the top of cooling switch (2). Press the bottom of the switch to turn the cooling off.

Pull up lever (3) to change the angle of the backrest. With the backrest in the desired position. Release the lever.

Push in adjuster (9) to adjust the fore/aft position of the seat cushion.

Pull lever (5) to adjust the seat and the console forward and backward.

Fore/Aft isolator activate/deactivate lever (4) allows the operator to lock the seat and console or allow the seat and console to float with the movement of the machine. With the adjuster pointing to the front of the machine, the console is locked. Rotate the lever to the rear to unlock the console and allow it to float.

Operate seat height adjustment (7) to adjust the seat and the console to the desired height. Pull up the lever to raise the height of the seat. Push down on the lever to lower the seat.

Use adjustable damper (8) to stiffen or loosen the seat suspension.

Note: Do not operate the seat compressor for over a minute or damage can result.

Use handle (10) to adjust the height of the console. When the lever is pulled forward, a gear is released. The operator can rotate the lever freely. Release the lever to return to the original position.

To adjust the seat forward or backward, pull up lever (11) and hold the lever. Move the seat to the desired position. To lock the seat in the selected position, release the lever.

Push adjuster (6) to adjust the tilt angle of the seat cushion.

The operator can adjust the height of headrest (12). To adjust the headrest, hold the headrest with both hands. Move the headrest up and down. Release the headrest when the desired position is attained. The headrest will remain in the desired position.

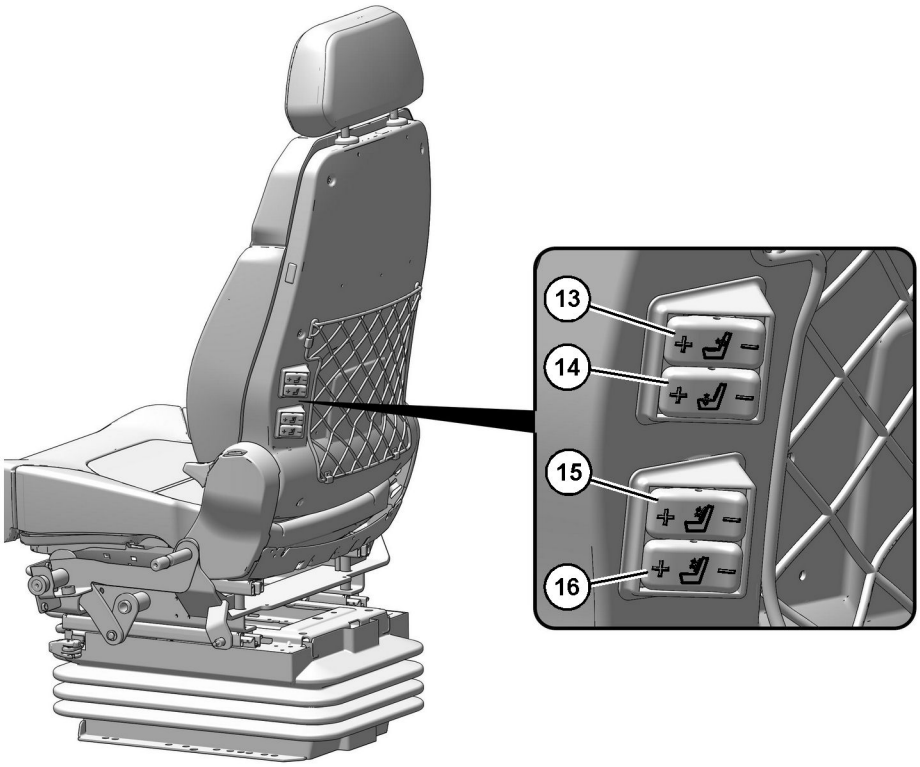

Illustration 306 g06251575

(13) Seat back side bolster control
(14) Seat cushion side bolster control
(15) Upper lumbar control
(16) Lower lumbar control

The lumbar controls on the back of the seat back all use two position switches. Press the + symbol to increase lumbar support. Press the - symbol to decrease lumbar support.

i07092308

Seat Belt

SMCS Code: 7327

Note: This machine was equipped with a seat belt when the machine was shipped from Caterpillar. At the time of installation, the seat belt and the instructions for installation of the seat belt meet the SAE J386 and ISO 6683 standards. Consult your Cat dealer for all replacement parts.

Always check the condition of the seat belt and the condition of the mounting hardware before you operate the machine.

Seat Belt Adjustment for Retractable Seat Belts

Fastening The Seat Belt

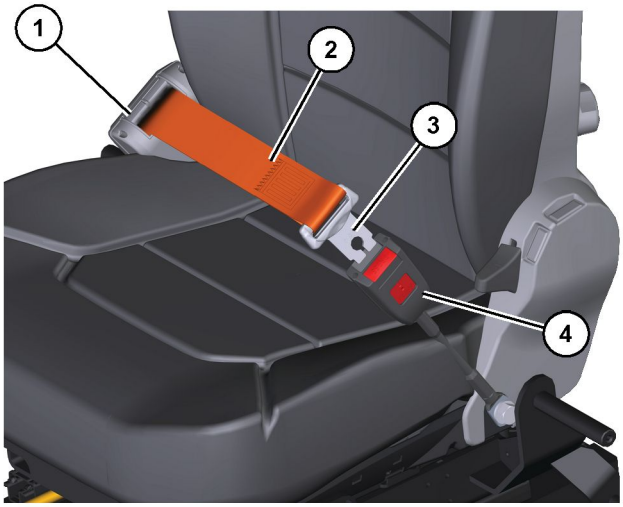

Illustration 307 g06223891

Pull seat belt (2) out of retractor (1) in a continuous motion.

Fasten seat belt catch (3) into buckle (4). Make sure that the seat belt is placed low across the lap of the operator.

The retractor will adjust the belt length and the retractor will lock in place. The comfort ride sleeve will allow the operator to have limited movement.

Releasing The Seat Belt

Illustration 308 g06223894

Push the release button on the buckle to release the seat belt. The seat belt will automatically retract into the retractor.

Extension of the Seat Belt

WARNING

When using retractable seat belts, do not use seat belt extensions, or personal injury or death can result.

The retractor system may or may not lock up depending on the length of the extension and the size of the person. If the retractor does not lock up, the seat belt will not retain the person.

Longer, non-retractable seat belts and extensions for the non-retractable seat belts are available.

Caterpillar requires only non-retractable seat belts to be used with a seat belt extension.

Consult your Cat dealer for longer seat belts and for information on extending the seat belts.

i07561838

Diesel Particulate Filter Regeneration

SMCS Code: 108F

Regeneration

Regeneration is the process of increasing exhaust temperatures to remove soot from the DPF. Regeneration also reduces hydrocarbons across the DOC & DPF, reduce sulfur from SCR, and remove DEF deposits from the DEF injector.

The DPF traps both soot and ash. The ash is removed through a manual cleaning process. Refer to Operation and Maintenance Manual, "Diesel Particulate Filter - Clean" for more information on the service of the DPF.

Regeneration Indicators

Regeneration Active – When illuminated, this indicator shows that the system is active. This indicator shows that elevated emission temperatures are possible. This indicator will turn off when regeneration is complete.

DPF – This indicator will illuminate to show that a regeneration is required. This indicator will illuminate when “Time to Regen” is less than a pre-determined amount of time.

Regeneration Disabled – This indicator will illuminate to show that a regeneration has been disabled.

Regeneration Switch

Force Regeneration – Press in the top switch for 2 seconds to begin regeneration.

Disable Regeneration – Press in the bottom switch for 2 seconds to disable regeneration.

Note: If equipped with a rocker style switch, the MIDDLE position of the regeneration switch is the default position for automatic regeneration.

Note: If the engine start switch key is cycled or the “Force Regeneration” switch is pressed for longer than 2 seconds the system will no longer be disabled. When the “Force Regeneration” switch is pressed and “Time to Regen” is less than 8 hours, regeneration will begin if the machine is at low idle and is parked.

Note: If the engine start switch key is cycled while the regeneration system is disabled via the “Disable Regeneration” switch, press and hold the “Disable Regeneration” switch for 2 seconds to reinitiate.

Modes of Regeneration

Automatic: The Electronic Control Module (ECM) uses multiple inputs from the engine and the machine to determine the best time to perform an automatic regeneration. Automatic regenerations can take place throughout the operating cycle of the engine. The regeneration active indicator will be illuminated when a regeneration is being performed. Interruptions of the regeneration are acceptable. If a regeneration is in progress and needs to be stopped, it is permissible to press the “Disable Regeneration” switch.

Note: Automatic adjustments of engine speed may be noticed during regenerations. If a regeneration is taking place and the engine is taken to low idle, the engine speed may remain elevated to maintain the regeneration.

Note: If the machine returns to work while an automatic regeneration is active, the regeneration may be stopped. The ECM will continue to monitor inputs to determine the best time to restart the regeneration.

Manual: A manual regeneration is initiated by pressing the “Force Regeneration” switch. A manual regeneration will only be allowed if the “Time to Regen” is less than 8 hours. If the “Force Regeneration” switch is pressed before “Time to Regen” is less than 8 hours, then “Regen not Required” will be displayed. The machine must be stationary, the parking brake must be applied, and the engine must be at low idle to perform a manual regeneration.

Disabled: When the regeneration system is in disabled mode, automatic regenerations will not be performed. The DPF indicator will illuminate if a manual regeneration is required. The “Time to Regen” displayed on the performance screen will indicate the time until the next regeneration will be required. However, the DPF indicator may illuminate with time remaining on the display. When the DPF indicator illuminates, the operator must perform a manual regeneration.

Regeneration Triggers

A regeneration may be required for the following reasons:

Soot: The DPF will collect soot produced by the engine. An automatic regeneration will become active to reduce soot level.

Start-Up Regeneration: A start-up regeneration is initiated by the ECM after a cold engine start. This regeneration is performed to heat the system to a required temperature for Diesel Exhaust Fluid (DEF) dosing to begin.

SCR Maintenance: A regeneration is performed to maintain the SCR system.

ARD Maintenance: A regeneration is performed to maintain the ARD system.

Regeneration System Warning Indicators

Illustration 309 g02117258

The DPF Indicator will illuminate when a regeneration is required. A regeneration should be performed as soon as possible.

Note: In some situations, the DPF indicator may stay illuminated after a regeneration ends. The illuminated DPF indicator indicates that a complete regeneration has **not** been performed. A complete regeneration is when the soot has been depleted or all the criteria for one of the other regeneration types have been met. If the DPF indicator stays illuminated, perform a regeneration without interruption. The DPF indicator will shut off when a regeneration is complete.

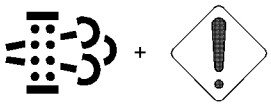

Illustration 310 g02117259

If the soot load is above a threshold or “Time to Regen” is 0 hours, then a regeneration is required. The DPF indicator and an action indicator will be illuminated. Engine power will be slightly derated. If the machine continues to operate without a regeneration, derate will eventually reach 100%. Stop the machine and apply the parking brake. With the engine at low idle, initiate a manual regeneration.

Illustration 311 g03676115

Once the amount of soot collected in the DPF has reached a threshold or “Time to Regen” has been at 0 hours for a pre-determined time, the DPF indicator and an action indicator will be illuminated and an audible alarm will sound.

10 minutes after the illumination of the DPF indicator, action indicator, and audible alarm, the engine will shut down. The engine can be restarted by cycling the engine start switch key. The engine will return to the previous derate state before shutdown.

Once the amount of soot collected reaches a threshold level or 6.4 hours of run time has passed since the action indictor was illuminated without a successful regeneration, the engine will have a 100% derate.

Once the amount of soot collected reaches a critical threshold level, the regeneration will be locked out. At this time, a regeneration can only be done through Cat Electronic Technician (ET), by an authorized Cat dealer. The engine may be restarted, but will only run for 30 seconds before shutting down again.

A fault code will be active for any DPF system-related issue. Follow the troubleshooting guide to rectify the issue.

If the DPF loses function, or is tampered with in any way, the check engine lamp, and an amber action lamp (if equipped) will illuminate. A fault code will also annunciate. The lamps and fault code will remain active until the problem is rectified.

NOTICE
The engine and emissions control system shall be operated, used, and maintained in accordance with the instructions provided. Failure to follow the instructions could result in emissions performance that does not meet the requirements applicable to the category of the engine. No deliberated tampering with, or misuse of the engine emissions control system should take place. Prompt action is critical to rectify any incorrect operation, use, or maintenance of the emissions control system.

Carbon Dioxide (CO_2) Emissions Statement

Emissions regulations require that the value of the CO_2 emissions be reported to the end user. For the engines listed below, the g/kWh was determined to be the CO_2 value during the EU type approval process. This value was recorded in EU type approval certificate. This CO_2 measurement results from testing over a fixed test cycle, under laboratory conditions, with a parent engine representative of the engine family. This value shall not imply or express any guarantee of the performance of a particular engine.

Table 19

Engine	CO_2 Value
C9.3B	696 g/kWh
C9.3	730 g/kWh
C13	717 g/kWh
C15 & C18	760 g/kWh
C18 > 560 kW	703 g/kWh

i07098988

Selective Catalytic Reduction Warning System

SMCS Code: 1091-WXX; 7400

The selective catalytic reduction (SCR) system is a system used to reduce NOx emissions from the engine. Diesel exhaust fluid (DEF) is pumped from the DEF tank and is sprayed into the exhaust stream. The DEF reacts with the SCR catalyst to reduce NOx and leaves a nitrogen and water vapor. The Exhaust Gas Recirculation (EGR) system cools, measures, and introduces recalculated exhaust gas into the intake manifold to aid in NOx reduction.

NOTICE
Stopping the engine immediately after the engine has been working under load can result in overheating of SCR components.

Refer to the Operation and Maintenance Manual, “Engine Stopping” procedure to allow the engine to cool and to prevent excessive temperatures in the turbocharger housing and the DEF injector.

Note: With the operator key in the OFF position, the purge system will activate.

Definitions

Observe the following definitions.

Self-correct – Fault condition no longer exists. An active fault code will no longer be active.

Notification – Action taken by the system to alert the operator of pending Inducement.

Inducement – Engine derates, vehicle speed limits, or other actions intended to prompt the operator to repair or maintain the emission control system.

Inducement Trigger – Fault conditions that result in activation of the inducement strategy. DEF level inducement faults have a diagnostic fault code. DEF quality fault, SCR tampering fault, SCR system fault, and EGR system faults will all have a related diagnostic fault code along with an inducement diagnostic fault code.

First occurrence – A DEF quality fault, SCR tampering fault, SCR system fault, or an EGR system fault becomes active for the first time.

Repeat occurrence – If any DEF quality fault, SCR tampering fault, SCR system fault, or an EGR system fault becomes active again within 40 hours of the first occurrence.

Safe Harbor Mode – Safe harbor mode is a 20 minute engine run time period. The engine can be operated with full power after reaching a level 3 inducement. Once in level 3 inducement, the operator can perform a key cycle and the engine will enter safe harbor mode. Safe harbor mode can only be implemented once. Safe harbor mode is not allowed for DEF level inducements.

Illustration 312 g06223861

DEF Level Normal

Inducement Strategy for DEF Level

If multiple warnings are present in the system, the most important problem is shown first. Press the right key or press the left key to view all the warnings that are present in the machine. If no keys are pressed within 5 seconds, the display will return to the most important problem.

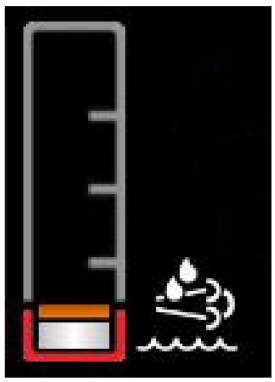

Illustration 313 g06223864

DEF Level Low

If the DEF level falls below 19%, “DEF Level Low” message will be displayed on the monitor. To avoid further inducements, turn the key to the OFF position and add DEF to the DEF tank.

Illustration 314 g06223865

DEF Level Low and Emission Fault

If the DEF level falls below 12.5%, a level 1 inducement event will occur. a “DEF Level Low” message and an “Emission Fault” message will appear on the monitor.

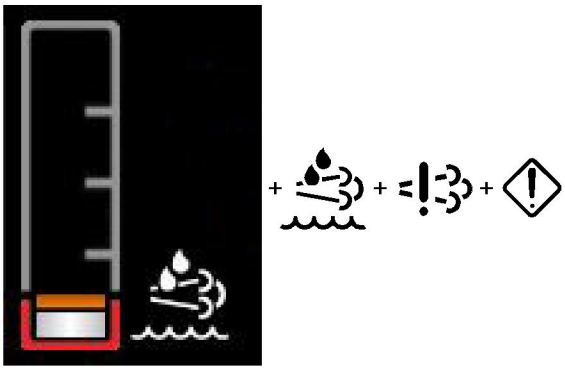

Illustration 315 g06223866

DEF Level Low, Emission Fault, and Flashing Action Lamp

If the DEF level is below 6%, a level 2 inducement event will occur. a “DEF Level Low” message and an “Emission Fault” message will appear on the monitor. The action lamp on the monitor will flash. If the ECM is configured to “Reduced Performance” and the DEF level has reached 0%, the machine will be limited to 75% torque.

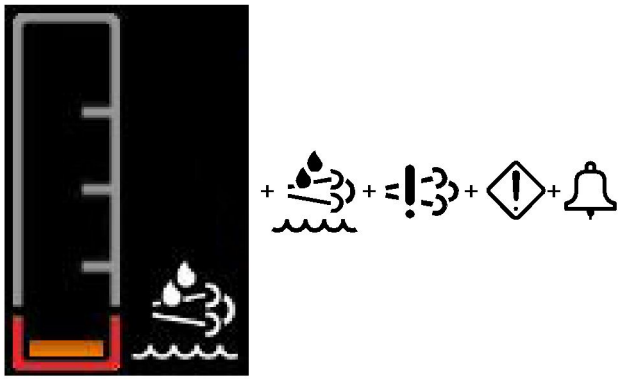

Illustration 316 g06223883

DEF Level Low, Emission Fault, Flashing Action Lamp, and Audible Alarm

If the ECM is configured to “Reduced Performance” and the DEF tank has been emptied of all DEF, the engine will be in a level 3 final inducement. If the ECM is configured to “Reduced Time” and the DEF level is 0%, the engine will be in a level 3 final inducement. Prior to final inducement a “DEF Level Low” message, and an “Emission Fault” message will appear on the monitor. The action lamp on the monitor will flash and an audible alarm will sound 20 seconds prior to the final inducement. The engine will be taken to low idle or will be shut down. Once shut down, the engine can be restarted for 5 minute periods at reduced speed and torque. If set to idle, the engine will idle indefinitely at reduced torque. The amber indicator next to the DEF level gauge on the dash will remain lit.

Note: Turn the key to the OFF position and add DEF to the DEF tank to reset the DEF level inducement.

Inducement Strategy for DEF Quality, Tampering, SCR System Fault, and Impeded EGR

If multiple warnings are present in the system, the most important problem is shown first. Press the right key or press the left key to view all the warnings that are present in the machine. If no keys are pressed within 5 seconds, the display will return to the most important problem.

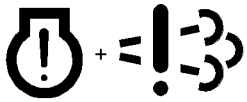

Illustration 317 g03623190

A “Engine Fault Check Engine” message and an “Emission Fault” message will appear on the monitor for a fault resulting from poor DEF quality, SCR system tampering, SCR system fault, or an EGR system fault. If the fault is the result of poor DEF quality, SCR system tampering, or SCR system fault, a first occurrence will result in a level 1 inducement for a duration of 2.5 hours. The level 1 inducement will also illuminate the check engine lamp. Repeat occurrences will result in a level 1 inducement duration of 5 minutes. If the fault is the result of an EGR system fault, a first occurrence will result in a level 1 inducement for a duration of 35 hours. Repeat occurrences will result in a level 1 inducement duration of 48 minutes.

Illustration 318 g03623191

If a fault condition exists for the entire duration of inducement level 1, the strategy advances to inducement level 2. A “Engine Fault Check Engine” message, and an “Emission Fault” message will appear on the monitor and the action lamp on the monitor will flash for a fault resulting from poor DEF quality, SCR system tampering, SCR system fault, or an EGR system fault. For poor DEF quality, SCR system tampering, and SCR system faults, the duration for a level 2 inducement is 70 minutes for the first occurrence. For EGR system faults, the duration for a level 2 inducement is 60 minutes for the first occurrence. Repeat occurrences for poor DEF quality, SCR system tampering, and SCR system faults will result in a level 2 inducement of 5 minutes. Repeat occurrences for EGR system faults will result in a level 2 inducement of 60 minutes.

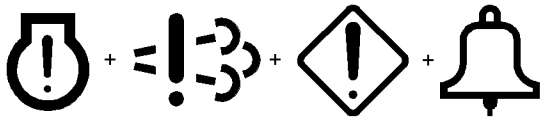

Illustration 319 g03623193

If a fault condition exists for the entire duration of inducement level 2, the strategy advances to inducement level 3. A “Engine Fault Check Engine” message, and an “Emission Fault” message will appear on the monitor, the action lamp will flash, and an audible alarm will sound 20 seconds prior to the level 3 inducement. The engine will be taken to low idle or will be shut down. After the level 3 inducement you may cycle the key, which will allow 20 minutes of engine run time with full torque. After 20 minutes, the engine will be in level 3 final inducement and will allow idle only or be shut down until the issue has been resolved. Once shut down, the engine can be restarted for 5 minute periods at reduced speed and torque. If set to idle, the engine will idle indefinitely at reduced torque.

Note: Contact your Cat dealer for repairs if a fault occurs.

i07416259

Selective Catalytic Reduction Warning System

SMCS Code: 1091-WXX; 7400

The selective catalytic reduction (SCR) system is a system used to reduce NOx emissions from the engine. Diesel exhaust fluid (DEF) is pumped from the DEF tank and is sprayed into the exhaust stream. The DEF reacts with the SCR catalyst to reduce NOx and leaves a nitrogen and water vapor. The Exhaust Gas Recirculation (EGR) system cools, measures, and introduces recalculated exhaust gas into the intake manifold to aid in NOx reduction.

NOTICE
Stopping the engine immediately after the engine has been working under load can result in overheating of SCR components.

Refer to the Operation and Maintenance Manual, “Engine Stopping” procedure to allow the engine to cool and to prevent excessive temperatures in the turbocharger housing and the DEF injector.

Note: With the operator key in the OFF position, the purge system will activate.

Definitions

Observe the following definitions.

Self-correct – Fault condition no longer exists. An active fault code will no longer be active.

Notification – Action taken by the system to alert the operator of pending Inducement.

Inducement – Engine derates, vehicle speed limits, or other actions intended to prompt the operator to repair or maintain the emission control system.

Inducement Trigger – Fault conditions that result in activation of the inducement strategy. DEF level inducement faults have a diagnostic fault code. DEF quality fault, SCR tampering fault, SCR system fault, and EGR system faults will all have a related diagnostic fault code along with an inducement diagnostic fault code.

First occurrence – A DEF quality fault, SCR tampering fault, SCR system fault, or an EGR system fault becomes active for the first time.

Repeat occurrence – If any DEF quality fault, SCR tampering fault, SCR system fault, or an EGR system fault becomes active again within 40 hours of the first occurrence.

Safe Harbor Mode – Safe harbor mode is a 20 minute engine run time period. The engine can be operated with full power after reaching a level 3 inducement. Once in level 3 inducement, the operator can perform a key cycle and the engine will enter safe harbor mode. Safe harbor mode can only be implemented once. Safe harbor mode is not allowed for DEF level inducements.

Illustration 320 g06223861

DEF Level Normal

Inducement Strategy for DEF Level

If multiple warnings are present in the system, the most important problem is shown first. Press the right key or press the left key in order to view all of the warnings that are present in the machine. If no keys are pressed within 5 seconds, the display will return to the most important problem.

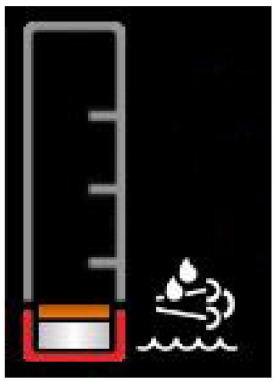

Illustration 321 g06223864

DEF Level Low

If the DEF level falls below 20%, “DEF Level Low” message will be displayed on the monitor. To avoid further inducements, turn the key to the OFF position and add DEF to the DEF tank.

Illustration 322 g06223865

DEF Level Low and Emission Fault

If the DEF level falls below 13.5%, a level 1 inducement event will occur. a “DEF Level Low” message and an “Emission Fault” message will appear on the monitor.

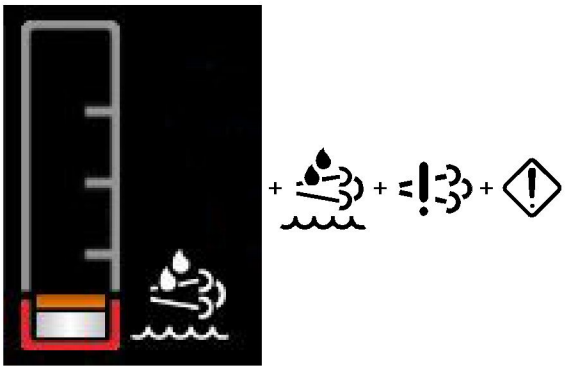

Illustration 323 g06223866

DEF Level Low, Emission Fault, and Flashing Action Lamp

If the DEF level is below 7.5%, a level 2 inducement event will occur. a “DEF Level Low” message and an “Emission Fault” message will appear on the monitor. The action lamp on the monitor will flash. If the ECM is configured to “Reduced Performance” and the DEF level has reached 1%, the machine will be limited to 75% torque.

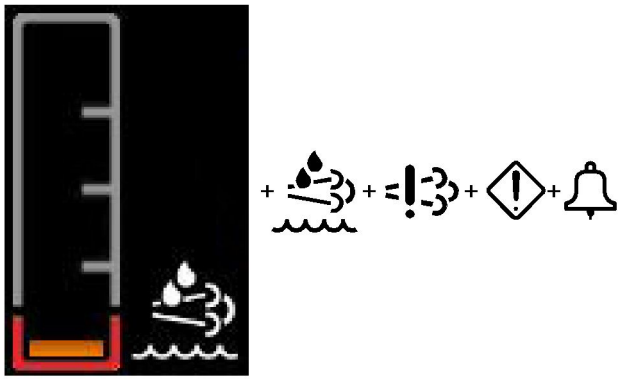

Illustration 324 g06223883

DEF Level Low, Emission Fault, Flashing Action Lamp, and Audible Alarm

If the ECM is configured to “Reduced Performance” and the DEF tank has been emptied of all DEF, the engine will be in a level 3 final inducement. If the ECM is configured to “Reduced Time” and the DEF level is 3%, the engine will be in a level 3 final inducement. Prior to final inducement a “DEF Level Low” message, and an “Emission Fault” message will appear on the monitor. The action lamp on the monitor will flash and an audible alarm will sound 20 seconds prior to the final inducement. The engine will be taken to low idle or will be shut down. Once shut down, the engine can be restarted for 5 minute periods at reduced speed and torque. If set to idle, the engine will idle indefinitely at reduced torque. The amber indicator next to the DEF level gauge on the dash will remain lit.

Note: Turn the key to the OFF position and add DEF to the DEF tank to reset the DEF level inducement.

Inducement Strategy for DEF Quality, Tampering, SCR System Fault, and Impeded EGR

If multiple warnings are present in the system, the most important problem is shown first. Press the right key or press the left key in order to view all of the warnings that are present in the machine. If no keys are pressed within 5 seconds, the display will return to the most important problem.

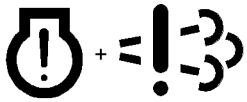

Illustration 325 g03623190

A “Engine Fault Check Engine” message and an “Emission Fault” message will appear on the monitor for a fault resulting from poor DEF quality, SCR system tampering, SCR system fault, or an EGR system fault. If the fault is the result of poor DEF quality, SCR system tampering, or SCR system fault, a first occurrence will result in a level 1 inducement for a duration of 2.5 hours. The level 1 inducement will also illuminate the check engine lamp. Repeat occurrences will result in a level 1 inducement duration of 5 minutes. If the fault is the result of an EGR system fault, a first occurrence will result in a level 1 inducement for a duration of 35 hours. Repeat occurrences will result in a level 1 inducement duration of 48 minutes.

Illustration 326 g03623191

If a fault condition exists for the entire duration of inducement level 1, the strategy advances to inducement level 2. A “Engine Fault Check Engine” message, and an “Emission Fault” message will appear on the monitor and the action lamp on the monitor will flash for a fault resulting from poor DEF quality, SCR system tampering, SCR system fault, or an EGR system fault. For poor DEF quality, SCR system tampering, and SCR system faults, the duration for a level 2 inducement is 70 minutes for the first occurrence. For EGR system faults, the duration for a level 2 inducement is 60 minutes for the first occurrence. Repeat occurrences for poor DEF quality, SCR system tampering, and SCR system faults will result in a level 2 inducement of 5 minutes. Repeat occurrences for EGR system faults will result in a level 2 inducement of 60 minutes.

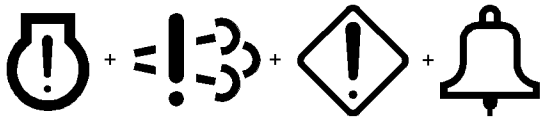

Illustration 327 g03623193

If a fault condition exists for the entire duration of inducement level 2, the strategy advances to inducement level 3. A “Engine Fault Check Engine” message, and an “Emission Fault” message will appear on the monitor, the action lamp will flash, and an audible alarm will sound 20 seconds prior to the level 3 inducement. The engine will be taken to low idle or will be shut down. After the level 3 inducement you may cycle the key, which will allow 20 minutes of engine run time with full torque. After 20 minutes, the engine will be in level 3 final inducement and will allow idle only or be shut down until the issue has been resolved. Once shut down, the engine can be restarted for 5 minute periods at reduced speed and torque. If set to idle, the engine will idle indefinitely at reduced torque.

Note: Contact your Cat dealer for repairs if a fault occurs.

Inducement Emergency Override for Cat Engines Equipped with Selective Catalytic Reduction Systems (If Equipped)

Note: The inducement emergency override will only be allowed on a select number of machines that may be used in emergency situations. Contact your Cat dealer to find out if your machine is allowed to have this feature.

Inducement emergency override can only be enabled using Caterpillar supplied passwords. The feature is disabled by default. The feature will be enabled at the factory if allowed. If the customer wants the feature enabled after delivery of engine, they will need to contact their Cat dealer. Inducement emergency override is regulated by the Environmental Protection Agency (EPA) and only allowed in the United States. The European Union and Japan do not allow the feature to be used. For detailed information on activating, deactivating, or resetting override, contact your Cat dealer. Before you attempt the procedures documented in this manual, make sure that you have read and understand the information in this document.

The United States EPA requires the limiting of engine speed and/or power (derate) in certain conditions, to help ensure proper functioning of the engines emission control system. The EPA allows the temporary disabling of these limits (restoration of full engine speed and power capability) during a qualified emergency situation. The EPA defines a qualified emergency situation as a significant direct or indirect risk to human life. Below are examples of direct versus indirect risks.

Direct – An emission control condition that inhibits performance of an engine being used to rescue a person from life-threatening situation.

Indirect – An emission control condition that inhibits performance of an engine being used to provide electrical power to a data center that routes 911 emergency response communications.

The emissions-related derate can be disabled for up to 120 hours of engine operation. The temporary disabling of emissions-related derate is referred to as “Inducement Emergency Override” and must be reported to the United States EPA. The override can only be enabled or disabled by an authorized Cat dealer using Caterpillar supplied passwords. Once enabled, the override can be activated thru the electronic display menu in the cab (if equipped). Upon activation, the check engine and action lamps will be illuminated until and the override is reset. A code indicating that the inducement emergency override is active will also be active until the override is reset. The override can only be reset by the engine manufacturer, Caterpillar. A Cat dealer can reset the override using Caterpillar supplied passwords. Improper use of the override, failure to deactivate the override when the emergency has ended, and failure to report use of the override is prohibited under federal regulations and subject to penalties imposed by the United States EPA. The civil penalty per day operated in violation can be severe.

NOTICE

When the inducement emergency override is active, damage to aftertreatment and engine components can occur. Never use the override longer than necessary and always fix the root cause of the inducement as soon as possible. There will always be a diagnostic code indicating root cause of the inducement. Refer to the troubleshooting guide for how to fix inducement related failures.

Override Activation Method

There are two options for setting the override, using Cat Electronic Technician (ET) or thru the electronic display menu in the cab (if equipped). If the override has already been enabled by an authorized Cat dealer, then the operator can turn on the override without further input from Caterpillar. Upon activation, the check engine and action lamps will illuminate to alert the operator that the override is active. The override must be paused by the operator if the emergency ends before the 120 hours of override operation has expired. While paused, the equipment will be subject to derates. Once paused, the override can be activated again if the 120 hour time period has not expired and if an emergency situation still exists. Per federal regulations, the operator must fill out the Override Usage Report below and provide the report to Caterpillar within 60 days of activating the override.

Setting the Override through Cat Electronic Technician (ET)

- Go to “Configuration Parameters”
- Select “Aftertreatment Configuration”
- Select “Operator Inducement Emergency Override Activation” to activate the override
- The “Value” field should be switched to “Activated” (to pause the override change the “Value” field to “Not Activated”)

Setting the Override through Electronic Display Menu

Machine applications will be able to activate or deactivate the override thru the electronic display menu in the cab. The override will only be available when engine is already in inducement (derated). Operators must be trained properly to understand where override is located and that there could be severe penalties as mentioned above for misusing the override. There will be a warning on display stating: “EMERGENCY USE ONLY. SEE OWNERS MANUAL. PENALTIES APPLY FOR MISUSE” .

Resetting the Override

The override needs to be reset through Cat Electronic Technician (ET) whenever the override has expired. The override cannot be used again until the override is reset. The override should also be reset whenever the emergency has ended, regardless if the override has expired or not (i.e. accumulated 120 hours). The check engine and action lamps will continue to be illuminated until the override is reset. The code indicating that the inducement emergency override is active will also continue to be active until the override is reset. The override may be reset at any point after the initial activation. The override can only be reset by the engine manufacturer, Caterpillar, or an authorized Cat dealer using Caterpillar supplied passwords.

Override Usage Report

To comply with federal regulations, the operator must report usage of the override to Caterpillar Inc. within 60 days of activating the override. Failure to meet this reporting requirement may subject the operator to penalties under 40 CFR 1068.101. Caterpillar Inc. will in turn report override usage annually to the United States EPA. Although submitted to Caterpillar Inc., the override usage reports are deemed to be submissions to the United States EPA. Federal regulations prohibit submitting false information. The following information must be included in the report:

- Contact name, mail and e-mail addresses, and telephone number for the responsible company or entity
- A description of the emergency situation, the location of the engine during the emergency, and the contact information for an official who can verify the emergency situation (such as a county sheriff, fire marshal, or hospital administrator)
- The reason for the activation of the override during the emergency situation, such as the lack of DEF, or the failure of an emission-related sensor when the engine was needed to respond to an emergency situation
- The engine serial number (or equivalent)
- A description of the extent and duration of the engine operation while the override was active, including a statement describing whether the override was manually deactivated (paused) after the emergency situation ended

The Override Usage Report may be sent via e-mail or regular mail to one of the following addresses:

Email :

Emissions_Compliance@cat.com

Regular Mail :

Caterpillar Inc.
P.O. Box 600
Mossville, IL 61552-0600
Attention: Emissions Compliance Manager

i07952218

Operator Controls

SMCS Code: 7300; 7301; 7451

Note: Your machine may not be equipped with all the controls that are described in this topic.

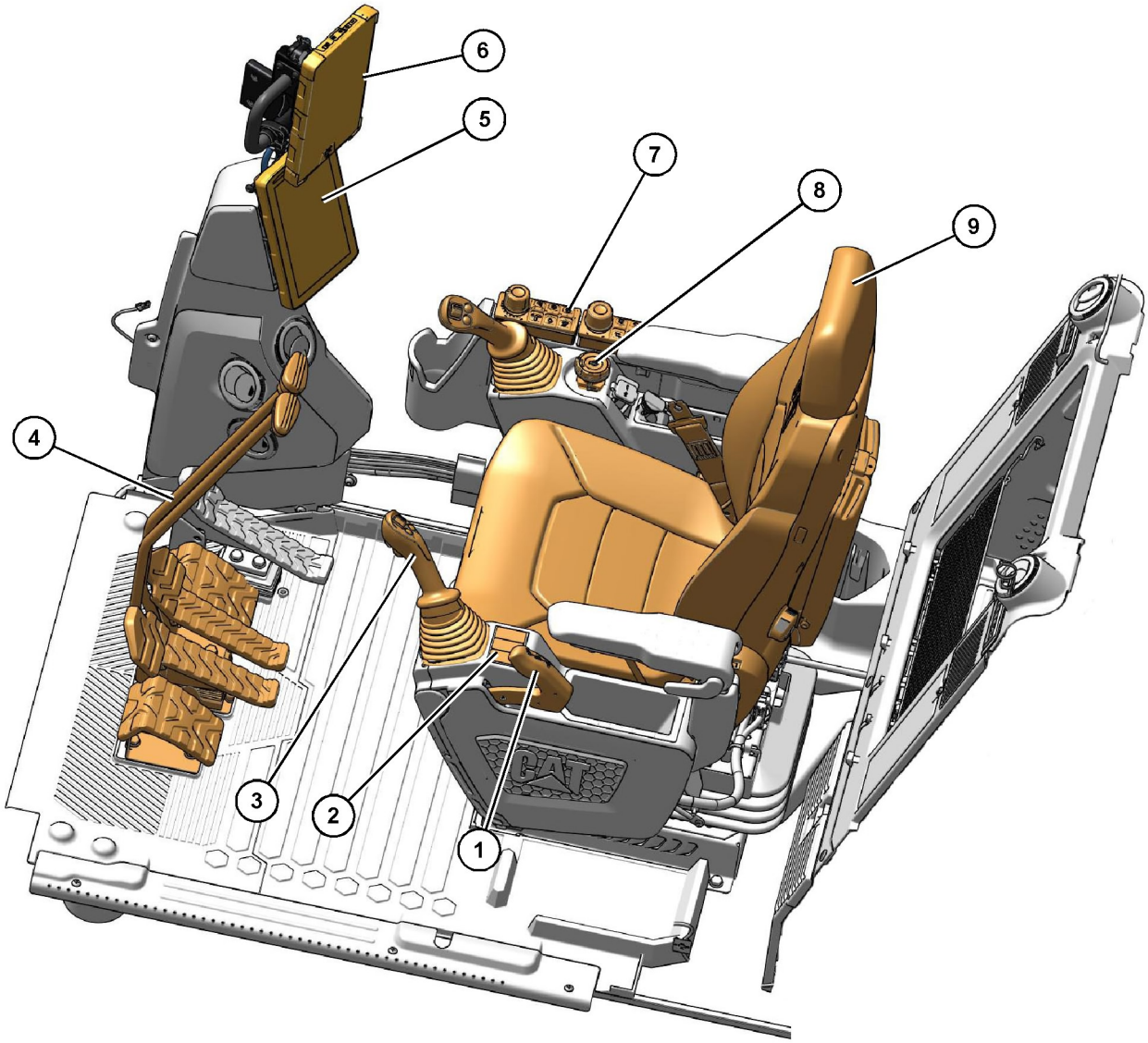

Illustration 328 g06178344

(1) Hydraulic lockout control
(2) Left side switch panel
(3) Joystick controls
(4) Travel controls
(5) Monitor
(6) Cat Grade Monitor
(7) Right side switch panel
(8) Engine start switch
(9) Operator seat

Hydraulic Lockout Control (1)

The lever for the hydraulic lockout control is at the left side of the left console.

Locked – Move the travel levers/pedals and move the joysticks to the HOLD (center) position. Move the lever for the hydraulic lockout control backward to the LOCKED position. All the factory installed hydraulic controls will become inoperable.

Note: Make sure that the lever for the hydraulic lockout control is in the LOCKED position before attempting to start the engine. If the lever is in the UNLOCKED position, the engine start switch will not function.

Unlocked – Move the lever for the hydraulic lockout control forward to the UNLOCKED position. All the factory installed hydraulic controls will become operable.

Tilt – For machines equipped with the tilt-up console, pull the lever to the rearmost position to release the console lock and tilt the console upward for easier exit and entry.

Left Side Switch Panel (2)

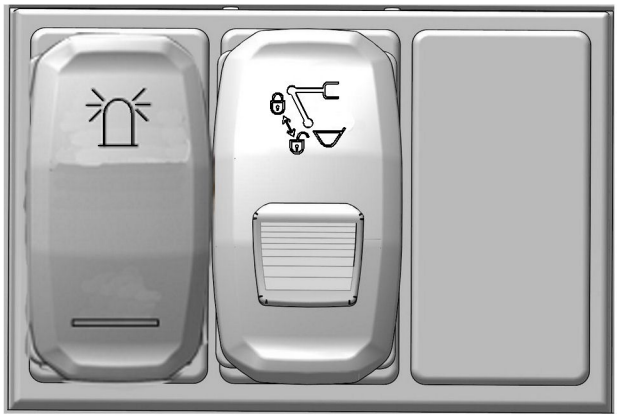

Illustration 329 g06219690

Beacon Light Switch (2A) (If equipped)

Beacon Light Switch – Push the top of the switch to turn on the beacon light. Push the bottom of the switch to turn off the beacon light.

Quick Coupler Control (2B) (If equipped)

If equipped, the switch for the quick coupler control is on the left console. The switch is equipped with a spring loaded lock button. To operate the switch, the lock button must be pushed forward to release the switch. With the lock held forward, press the rear of the switch downward to uncouple the bucket or work tool. Press the button again to attach the bucket or work tool.

Note: An alarm will sound whenever the switch has been activated to lock or unlock a work tool.

For further details, see Operation and Maintenance Manual, “Quick Coupler Operation”.

Joystick Controls (3)

The joystick control is used to control the functions of the machine implements. For more information on the individual functions of the joysticks, refer to Operation and Maintenance Manual, “Joystick Controls”.

Travel Control (4)

Illustration 330 g06178249

Position for normal travel

(A) Rear of machine
(B) Final drive
(C) Idler

When you travel, make sure that final drive sprockets (B) are under the rear of the machine.

Stop – Release the travel levers/pedals to stop the machine. When you release the travel levers/pedals from any position, the travel levers/pedals will return to the CENTER position. The travel brakes will be applied.

Move both of the travel levers or both of the travel pedals equally in the same direction to travel straight.

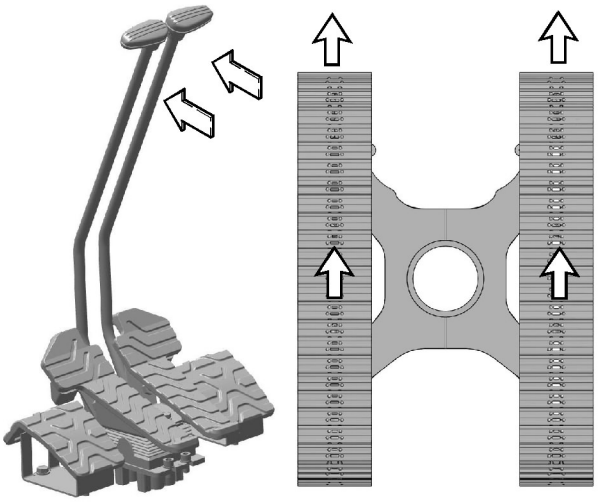

Illustration 331 g06178269

FORWARD travel

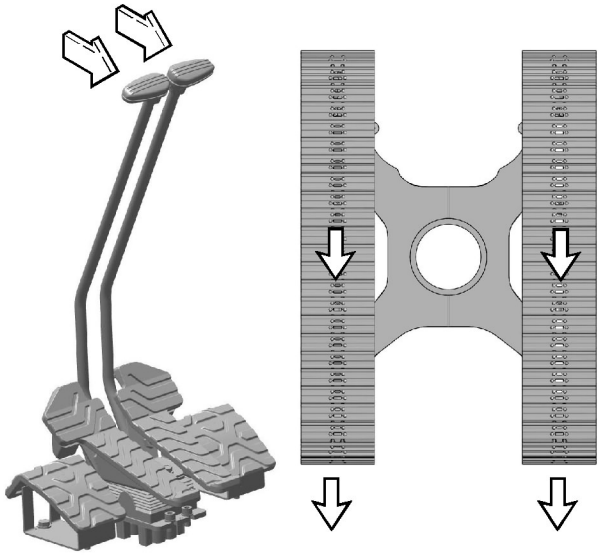

Illustration 332 g06178283

REVERSE travel

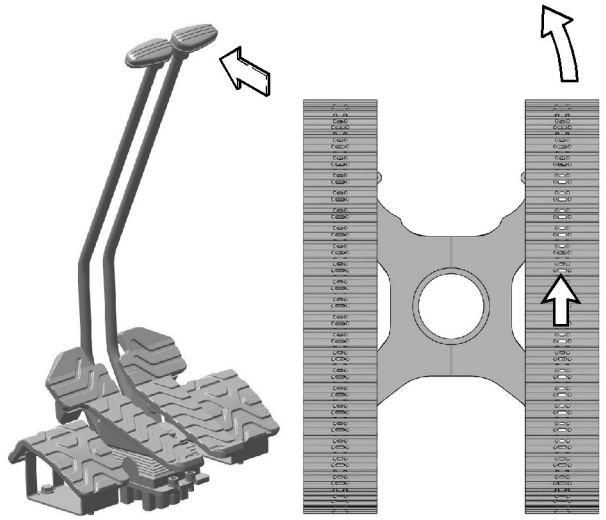

Illustration 333 g06178288

Pivot left turn (FORWARD)

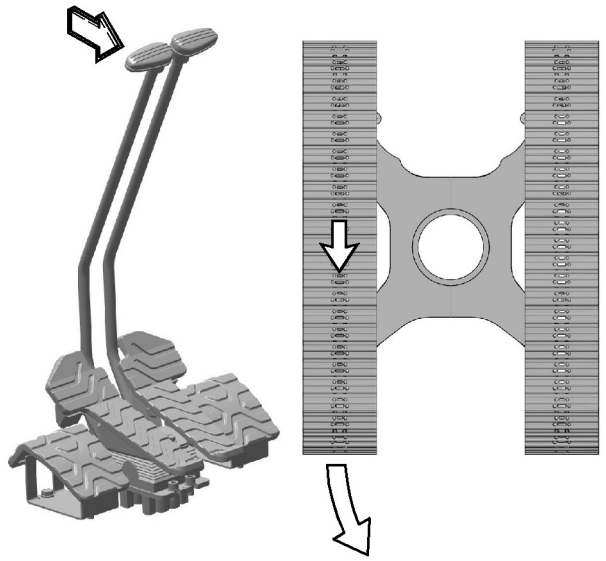

Illustration 334 g06178294

Pivot Left Turn (REVERSE)

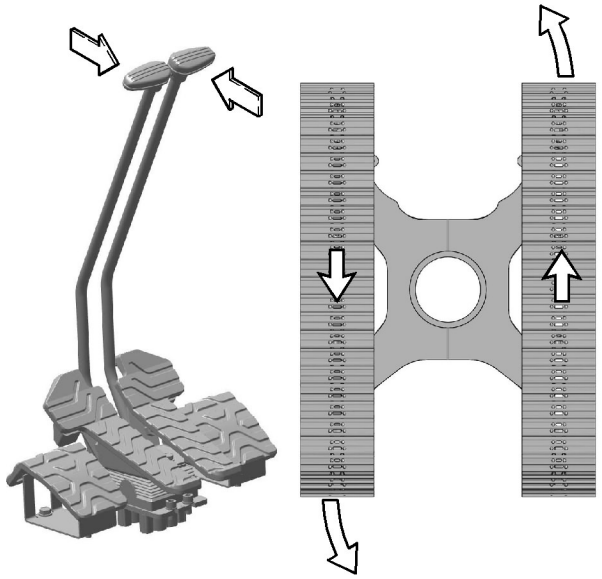

Illustration 335 g06178300

Counterrotate turn (LEFT)

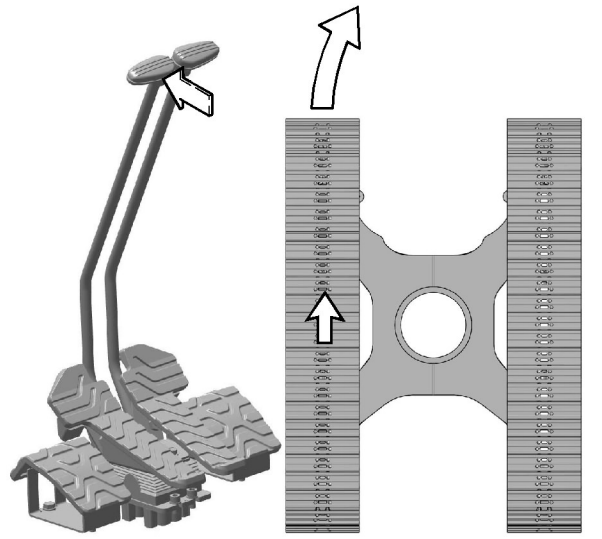

Illustration 336 g06178305

Pivot right turn (FORWARD)

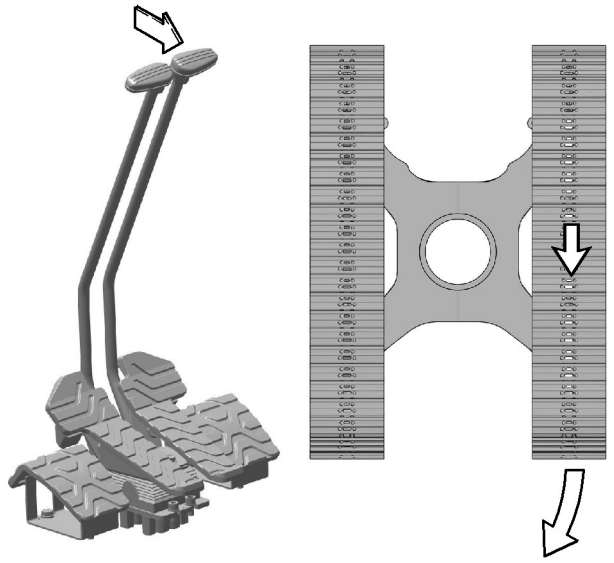

Illustration 337 g06178308
Pivot right turn (REVERSE)

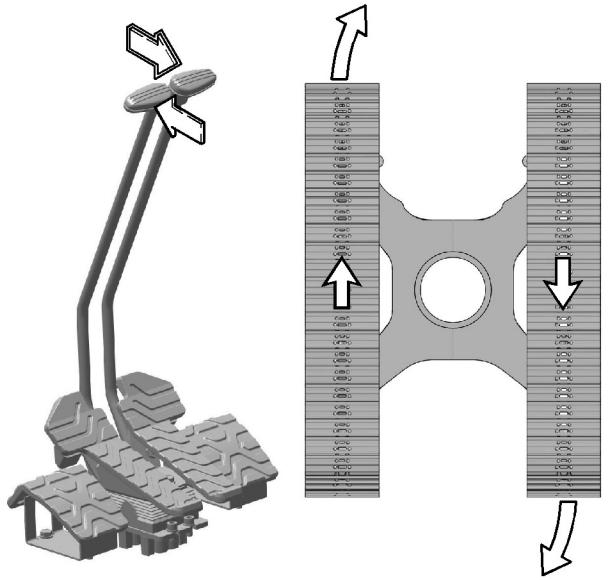

Illustration 338 g06178313
Counterrotate turn (RIGHT)

Monitor (5)

The monitor is used to display various operating information of the machine. For more information on the operation of the monitor, refer to Operation and Maintenance Manual, “Monitoring System”.

Cat Grade Monitor (6) (if equipped)

Monitor (6) is used to display Cat Grade operating information. Cat Grade is designed to calculate bucket tip position and provide visual and audible feedback to the operator. This feedback allows the operator to achieve the desired grade safer, quicker and more accurately than traditional grading techniques. For more information on the operation of the monitor, refer to Operation and Maintenance Manual, M0082987, “Cat 2D and 3D GRADE System for Next Gen Hydraulic Excavators”.

Engine Start Switch (Machines equipped with Delayed Engine Shutdown 8)

NOTICE
The engine start switch must be in the ON position and the engine must be running in order to maintain electrical functions and hydraulic functions. This procedure must be followed in order to prevent serious machine damage.

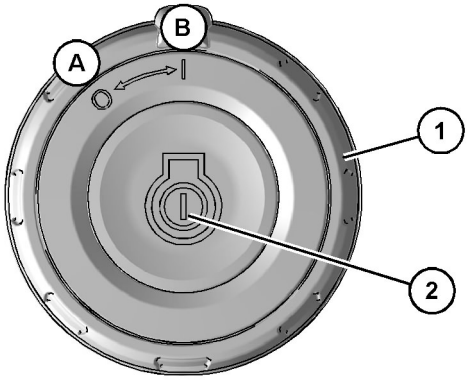

Illustration 339 g06180554

(A) Off
(B) On
(1) Engine start ring
(2) Start button

The Delayed Engine Shutdown is a feature that automatically determines when idle state cool down is needed to prevent engine and aftertreatment component damage.

When the engine start switch key is turned to the OFF position, the engine may continue to run for an additional few minutes. This is normal. When the delayed engine shutdown feature is complete, the product will automatically shut itself off.

Engine Stop (Shutdown) – Push Start Button for 2 seconds to disable the delayed engine shutdown (DES). The engine will be shut down immediately.

Note: Shutting down the engine using this method is considered a hard shutdown which disables the DES.

Note: A warning message and/or Audible alarm will be initiated. A fault code will be logged for improper engine shutdown if exhaust temperature is above limit.

Note: Overriding delayed engine shutdown may reduce engine and machine system component life.

For more information, refer to Operation and Maintenance Manual, “Diesel Particulate Filter Regeneration”.

OFF – Turn the engine start ring (1) to the OFF position (A) to stop the engine.

ON – To activate the electrical circuits in the cab and enable engine starting, turn the engine start ring (1) clockwise to the ON position (B).

START – To start the engine, enter the code on the monitor. Press start button (2). After the engine starts, release the button.

Note: Pressing the start button with the engine on will also turn off the engine.

Engine Start Switch (Machines not equipped with Delayed Engine Shutdown 8)

NOTICE
The engine start switch must be in the ON position and the engine must be running in order to maintain electrical functions and hydraulic functions. This procedure must be followed in order to prevent serious machine damage.

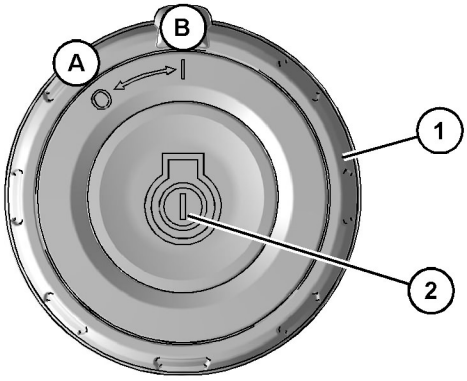

Illustration 340 g06180554

(A) Off
(B) On
(1) Engine start ring
(2) Start button

OFF – Turn the engine start ring (1) to the OFF position (A) to stop the engine.

ON – To activate the electrical circuits in the cab and enable engine starting, turn the engine start ring (1) clockwise to the ON position (B).

START – To start the engine, enter the code on the monitor. Press start button (2). After the engine starts, release the button.

Note: Pressing the start button with the engine on will also turn off the engine.

Engine Idle Shutdown

If the operator has not operated the machine for aperiodof time, this function shuts down the engine. Engine Idle Shutdown does not shut down other systems, such as the AC, which can run down the battery after idle shutdown. This function comes disabled from the factory but can be enabled and adjusted in the monitoring system. Refer to Operation and Maintenance Manual, “Monitoring System”

Note: Engine Idle Shutdown may be required for local regulations.

The Engine Idle Shutdown (EIS) shuts down the engine if the following conditions are met:

- The control levers are in neutral.
- The engine coolant temperature is greater than 70° C (158° F).
- The battery voltage is greater than 24.5V
- The engine speed is less than 2000 rpm.
- The ambient temperature range is between 0° C (32° F) and 30° C (86° F).
- The Back Pressure Valve (BPV) is not working.

Note: If any service tests or calibrations are running, the machine will not enter into engine idle shutdown.

Engine Idle Shut down – The action lamp will illuminate and the monitor will display a message 20 seconds before the engine shuts down. An operator can cancel the shutdown by pressing a button on the monitor or move one of the controls.

Operator's Seat (9)

There are different options for operators seats. Each operator seat and console have various adjustments to meet a wide range of operators. For more information, refer to Operation and Maintenance Manual, “Seat”.

Tilt-Up Console (9A)

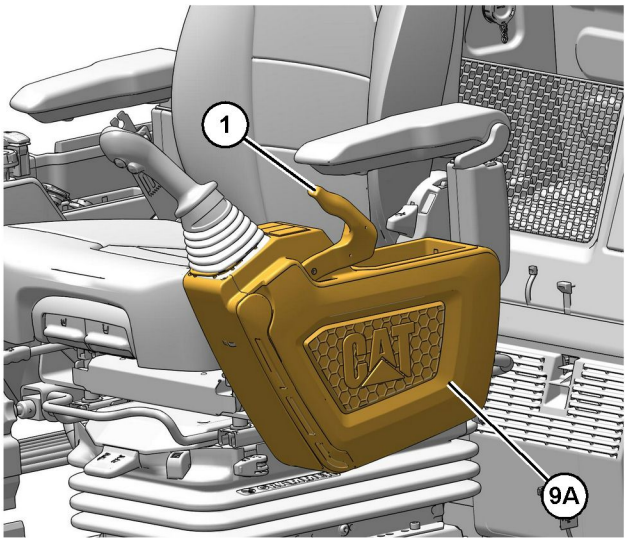

Illustration 341 g06226523

(1) Hydraulic lockout control
(2) Tilt-up console

Some optional seats are equipped with a tilt-up console. The console can be tilted upward for easier exit and entry. The console is unlocked by pulling the hydraulic lockout control (1) to the rearmost position. The console will then tilt upward. Simply push the console downward until the console locks into place when ready for use.

Right Side Switch Panel (7)

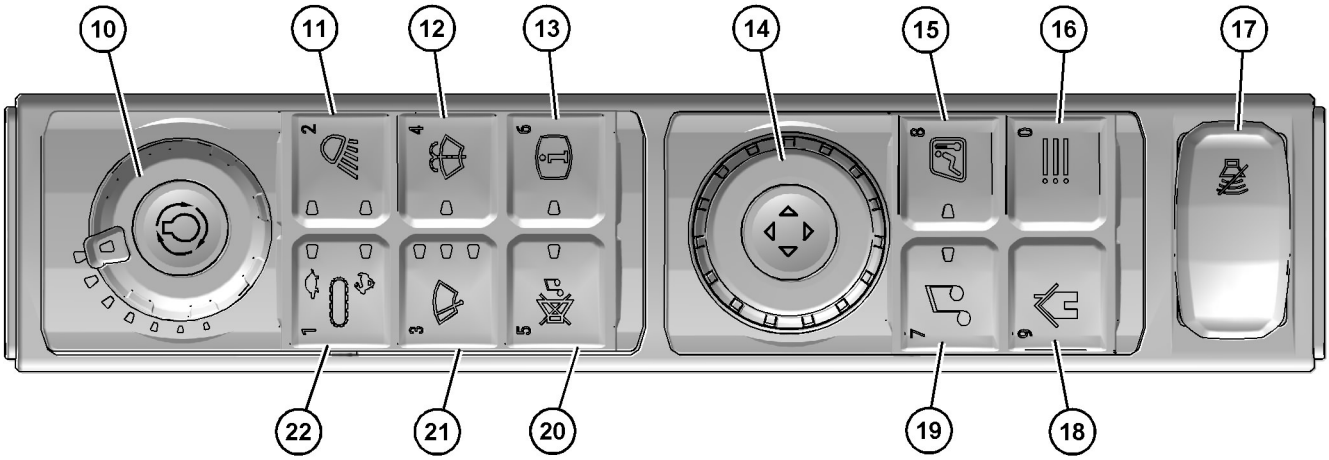

Illustration 342 g06178333

Right side switch panel

(10) Engine speed / power mode control
(11) Light switch
(12) Window washer
(13) Operator Information
(14) Jog dial
(15) Heating and air conditioning
(16) Next menu
(17) Travel alarm mute
(18) Home
(19) Radio control
(20) Radio mute switch
(21) Window wiper
(22) Travel speed control

Note: In addition to the intended functions, the buttons on the switch panel are numbered from 0-9. The numbered buttons can be used to enter numbers into the monitor for screens such as the passcode screen.

Engine Speed / Power Mode Control (10)

Engine Speed Control – Turn the dial to control the engine speed (engine rpm). Select the desired position from the seven available positions. Turn the dial counterclockwise to decrease the engine speed (engine rpm). Turn the dial clockwise to increase the engine speed (engine rpm).

Power Mode Control – Push in the dial to change the power mode settings. The Power Mode Control allows the operator to choose what power mode to operate the engine. The modes that can be selected are: “ECONOMY” , “SMART” , and “POWER” .

Note: The default power mode setting can be set within the monitor. For more information, refer to Operation and Maintenance Manual, “Monitoring System”.

Note: “ECONOMY” mode is not available on GC models.

Light Switch (11)

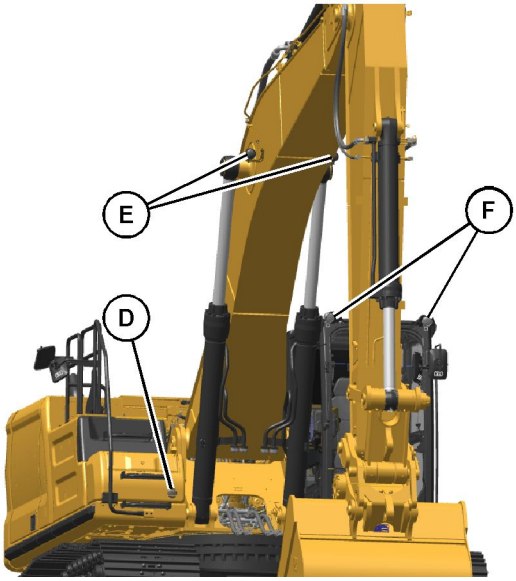

Illustration 343 g06278042

Light Switch – Push the switch to turn on the work lights.

Whenever you push the switch, you change the pattern of the work lights that are turned on. The indicator lights in the cab indicate the pattern of the work lights.

Pattern 1 – When you press the light switch once, the first indicator light turns on. When the first indicator light is on, the following work lights are turned on: work light (D), which is mounted on the chassis, and work lights (F), which are mounted on the cab.

Pattern 2 – When you press the light switch twice, the first indicator light and the second indicator light turn on. When the first indicator light and the second indicator lights are on, the following work lights are turned on: work light (D), which is mounted on the chassis, work lights (F), which are mounted on the cab, and work lights (E), which are mounted on the boom.

OFF – When both of the indicator lights are off, all the work lights are off.

Note: Your machine may be equipped with a Premium Surrounding Lighting package with left side, right side and rear lights. Refer to M0109053, “Next Generation Hydraulic Excavator Monitoring System Supplement”, Function List Screen, Work Light Control for more information.

Note: Your machine may be equipped with a lighting system that has a time delay. When this system is installed, cab lights (F) and boom lights (E) will not turn off for a predetermined amount of time after the engine start key has been turned to the OFF position. The time delay can vary from 0 minutes to 5 minutes. For further details, consult your Cat dealer.

Window Washer (12)

Window Washer (12) – Push the switch to activate the window washer. While the switch is depressed, the indicator light will come on and washer fluid will spray from the nozzle. The window wiper will also operate while the switch is depressed. After the switch is released for approximately 3 seconds, the window wiper will stop.

NOTICE
If the wiper does not operate with the switch in the ON position, turn the switch off immediately. Check the cause. If the switch remains on, motor failure can result.

NOTICE
If the washer is used continuously for more than 20 seconds or used when no washer solution comes out, motor failure can result.

Operator Information (13)

Operator Information Button (13) – Press and hold this button to view the operator information screen. The indicator light will illuminate when the button is pressed.

Jog Dial (14)

The jog dial can be used to select items displayed on the monitor screen. The dial can be rotated 360 degrees. The dial can also be moved left, right, up, and down. The dial can be pushed in to make a selection.

Air Conditioning and Heating (15)

Air Conditioning and Heating (15) – Press this button to bring up the air conditioning and heating menu. The indicator light will illuminate when the heating and cooling system is active. The jog dial (13) can be used to make selections. If equipped with a touch screen, the selections can be made by touching the monitor.

Refer to Air Conditioning and Heating Control for more information.

Next Menu(16)

Next Menu (16) – Press the next menu button to access the next higher menu. If there is not a menu above the current screen being viewed, the button will not do anything.

Refer to Monitoring System for more information.

Travel Alarm Mute Switch (17)

Travel Alarm Mute Switch (17) – Press travel alarm mute switch (17) to mute the travel alarm.

Note: The travel alarm will sound when the travel levers or the travel pedals are activated.

Home (18)

Home Key (18) – Press the home key to return to the default display at any time.

Refer to Monitoring System for more information.

Radio Control (19)

Radio Control (19) – Press this button to display the radio controls on the monitor. The indicator light on the button will illuminate when the radio is turned on. Use jog dial (14) to make selections. If equipped with a touch screen display, touch the icons on the screens to make a selection.

Refer to Radio for more information.

Radio Mute (20)

Radio Mute (20) – Press radio mute switch (20) to mute the radio. The indicator light will illuminate when mute is activated. Press the button again to unmute the radio.

Window Wiper (21)

Window Wiper (21) – Push the switch to activate the window wiper. Whenever the switch is depressed, the mode of the window wiper will change according to the indicator light that is illuminated.

6 Second Delay – When the window wiper switch is depressed one time, the first indicator light will turn on. The window wiper will operate intermittently at six second intervals.

3 Second Delay – When the window wiper switch is depressed two times, the second indicator light will turn on. The window wiper will operate intermittently at three second intervals.

Continuous Operation – When the window wiper switch is depressed three times, the first indicator light and the second indicator light will turn on. The window wiper will operate continuously.

OFF – When the window wiper switch is depressed four times, the indicator lights will turn off. The window wiper stops.

Travel Speed Control (22)

WARNING

Do not change the setting of the travel speed control switch while you travel. Machine stability may be adversely affected.

Personal injury can result from sudden changes in machine stability.

Travel Speed Control Switch (22) – Press the travel speed control switch to select automatic travel speed or low travel speed. When the engine start switch is on, the travel speed control switch is always set at the LOW SPEED position. Whenever the travel speed control switch is pressed, the travel speed changes. The indicator lights illuminate to show which speed selection is active.

LOW SPEED – Select the LOW SPEED position if you travel on rough surfaces or on soft surfaces or if you require a great drawbar pull. Also, select the LOW SPEED position if you are loading a machine onto a trailer or you are unloading a machine from a trailer.

AUTOMATIC – If you travel on a hard, level surface at a fast speed, select the AUTO position.

Continuous driving at high speed should be limited to 2 hours. If you need to continue driving at high speed for more than 2 hours, stop the machine for 10 minutes. This process will cool down the travel drives before you resume driving.

USB/Aux Ports (23)

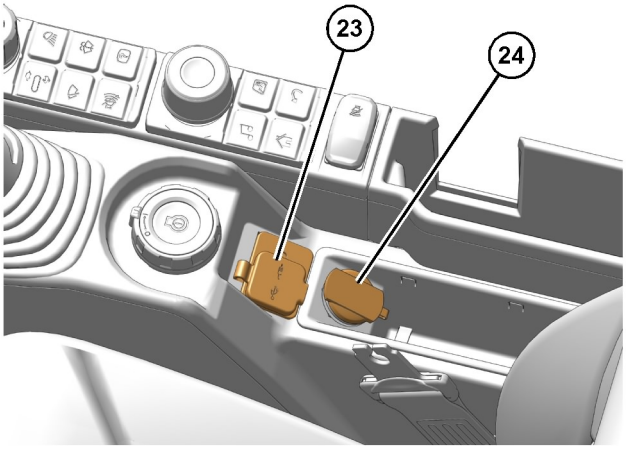

Illustration 344 g06204950

(23) USB/AUX/MIC port
(24) 12 V socket

USB – The USB port is used to play music from a portable device. The USB symbol on the radio screen on the monitor must be selected.

AUX – The AUX port is used to play music from a portable device. AUX must be selected on the radio screen on the monitor.

12V Power Receptacle (24) & (25)

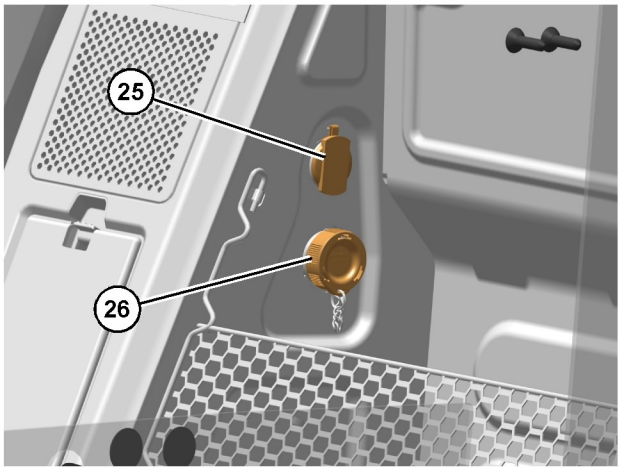

Illustration 345 g06178354

Electronic Technician service port

12V Power Receptacle – The power receptacles can be used to power automotive electrical equipment or accessories. The power receptacle only operates when the engine start switch is in the ON position.

Service Port (26)

An Electronic Technician (ET) service port is located inside the cab behind the seat. This service port allows service personnel to connect a laptop computer that is equipped with Electronic Technician. Service personnel can use electronic technician to diagnose machine and engine systems.

Contact your Cat dealer for additional information.

Dome Light (27)

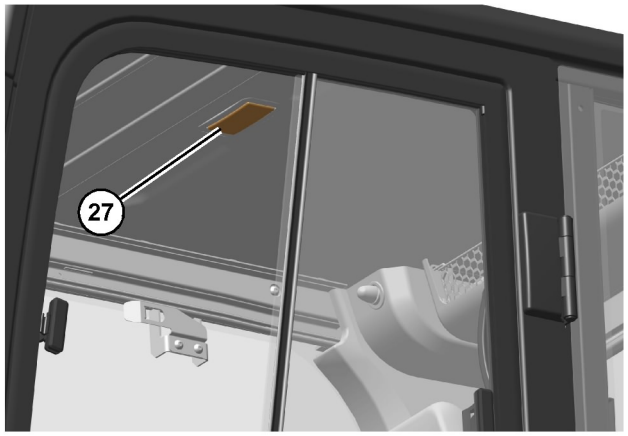

Illustration 346 g06208645

The dome light has three different positions. When the dome light is in the center position (horizontal), the light will come on when the door is open and shut off when the door is closed.

When the left side of the light is pressed, the lamp will be inoperable.

When the right side of the light is pressed, the lamp will be illuminated until the lamp is switched to another position.

i07348763

Battery Disconnect Switch

SMCS Code: 1411-B11

Illustration 347 g06264946

The battery disconnect switch is on the left side of the machine behind the rear access door.

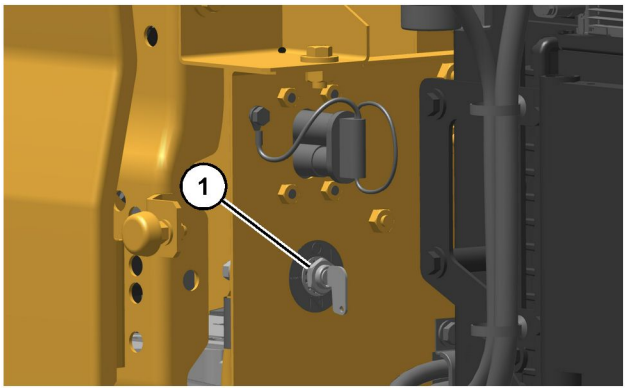

Illustration 348 g06264951

(1) Battery disconnect switch

Battery Disconnect Switch – The battery disconnect switch can be used to disconnect the battery from the machines electrical system. The key must be inserted into the battery disconnect switch before the battery disconnect switch can be turned.

ON – To activate the electrical system, insert the disconnect switch key and turn the battery disconnect switch clockwise. The battery disconnect switch must be turned to the ON to enable battery power to start the engine.

OFF – To deactivate the electrical system, turn the battery disconnect switch counterclockwise to the OFF position.

The battery disconnect switch and the engine start switch perform different functions. The entire electrical system is disabled when you turn the battery disconnect switch to the OFF position. The battery remains connected to the electrical system when you turn the engine start switch to the OFF position.

Turn the battery disconnect switch to the OFF position and remove the key when you service the electrical system or any other machine components. If installed with a cover lock, close the cover and install a padlock.

It is also good practice to use the disconnect switch after you operate the machine. This will prevent the battery from being discharged. The following problems can cause battery discharge:

- short circuits
- current draw via some components
- vandalism

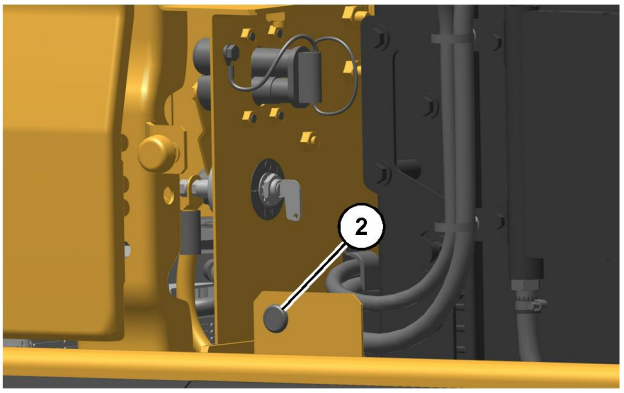

Illustration 349 g06289653

(2) DEF purge indicator lamp

Note: If DEF purge indicator lamp (2) is illuminated, wait for the light to turn off before turning the disconnect switch to the OFF position. Waiting for the light to turn off allows the DEF system to fully purge the exhaust fluid and prevents damage to engine components.

i08001446

Product Link

SMCS Code: 7490; 7606

Note: Your machine may be equipped with the Cat ® Product Link™ system.

The Cat Product Link communication device utilizes cellular and/or satellite technology to communicate equipment information. This information is communicated to Caterpillar, Cat dealers, and Caterpillar customers. The Cat Product Link communication device uses Global Positioning System (GPS) satellite receivers.

The capability of two-way communication between the equipment and a remote user is available with the Cat Product Link communication device. The remote user can be a dealer or a customer.

Data Broadcasts

Data concerning this machine, the condition of the machine, and the operation of the machine is being transmitted by Cat Product Link to Caterpillar and/or Cat dealers. The data is used to serve the customer better and to improve upon Cat products and services. The information transmitted may include: machine serial number, machine location, and operational data, including but not limited to: fault codes, emissions data, fuel usage, service meter hours, software, and hardware version numbers and installed attachments.

Caterpillar and/or Cat dealers may use this information for various purposes. Refer to the following list for possible uses:

- Providing services to the customer and/or the machine
- Checking or maintaining Cat Product Link equipment
- Monitoring the health of the machine or performance
- Helping maintain the machine and/or improve the efficiency of the machine
- Evaluating or improving Cat products and services
- Complying with legal requirements and valid court orders
- Performing market research
- Offering the customer new products and services

Caterpillar may share some or all the collected information with Caterpillar affiliated companies, dealers, and authorized representatives. Caterpillar will not sell or rent collected information to any other third party and will exercise reasonable efforts to keep the information secure. Caterpillar recognizes and respects customer privacy. For more information, please contact your local Cat dealer.

Operation in a Blast Site for Product Link Radios

WARNING

This equipment is equipped with a Cat® Product Link communication device. When electric detonators are being used for blasting operations, radio frequency devices can cause interference with electric detonators for blasting operations which can result in serious injury or death. The Product Link communication device should be deactivated within the distance mandated under all applicable national or local regulatory requirements. In the absence of any regulatory requirements Caterpillar recommends the end user perform their own risk assessment to determine safe operating distance.

Refer to your products Operation and Maintenance Manual Supplement, “Regulatory Compliance Information” for more information.

For information regarding the methods to disable the Cat Product Link communication device, please refer to your specific Cat Product Link manual listed below:

- Operation and Maintenance Manual, SEBU8142, “ Product Link - PL121, PL321, PL522, and PL523”
- Operation and Maintenance Manual, SEBU8832, “ Product Link PLE702, PLE602, PLE601, PL641, PL631, PL542, PL240, PL241, PL243, PL141, PL131, PL161, PL083 and PL042 Systems”

Note: If no radio disable switch is installed and the equipment will be operating near a blast zone, a Product Link radio disable switch may be installed on the equipment. The switch will allow the Cat Product Link communication device to be shut off by the operator from the equipment control panel. For more details and installation procedures, refer to the following:

- Special Instruction, REHS7339, “Installation Procedure for Product Link PLE640 Systems”
- Special Instruction, REHS8850, “Installation Procedure for the Elite Product Link PLE601, PLE641, and PLE631 Systems”
- Special Instruction, SEHS0377, “Installation Procedure for the Product Link PL131, PL141, and PL161 Systems”
- Special Instruction, REHS9111, “Installation Procedure for the Pro Product Link PL641 and PL631 Systems”
- Special Instruction, M0098124, “Installation Procedure for Pro Product Link PL243 Systems”
- Special Instruction, M0109130, “Installation Procedure for Product Link PL683 and PL783 Systems”

i07785958

Machine Security System

SMCS Code: 7631

General Information

NOTICE
This machine may be equipped with a Cat ® Machine Security System (MSS) and may not start under certain conditions.

Illustration 350 g06223917

Machines that are equipped with Cat MSS can be identified by a decal in the operator station Read the following information and know your machines settings. Your Cat dealer can identify your machine settings.

The Cat Machine Security System (MSS) discourages unwanted operation of a machine. When armed, the MSS requires operator login to start the engine. The following methods of operator login to disarm the security system are available:

- Cat Bluetooth® key fob
- Cat App: Fleet Management
- Passcode

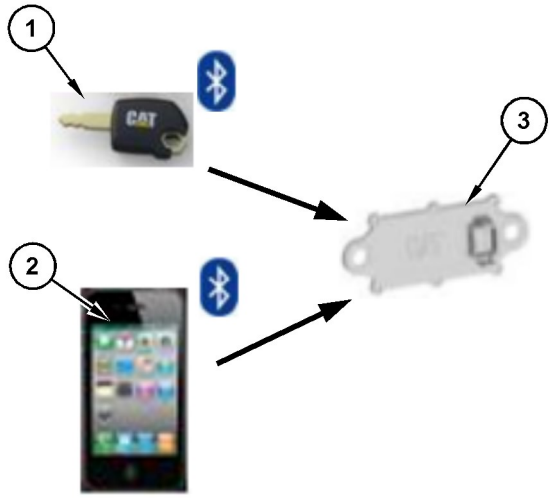

Illustration 351 g06212167

Bluetooth Connections

(1) Cat Bluetooth key fob (CATBTFOB)
(2) Cat App: Fleet Management mobile application
(3) Cat Bluetooth transceiver (CATBTNT)

The Cat Bluetooth key fob (1) contains an electronic chip. The electronic chip has a unique identification number (ID). A Bluetooth transceiver is mounted in the cab to read the ID of the key. The Bluetooth transceiver module translates the information received from the key fob into a J1939 message. This message is sent to the Electronic Control Module (ECM) that is connected to the MSS. The ECM is typically the Machine ECM. The ECM is set up with the ID of the keys of the intended users.

When the MSS is armed, the ECM validates the ID of the key fob. If the key ID is on the list of authorized keys in the ECM and the key is valid, the machine will operate normally. If the key ID is not on the list of authorized keys in the ECM or is not valid, the MSS will keep the critical machine functions disabled.

Note: A Bluetooth enabled phone can disarm MSS if the phone is on the list. Operator Management System (OMS) is necessary to be able to add phones to the vehicle ID list. After the phone is added, OMS is no longer needed for the Cat App: Fleet management mobile application to function as a valid key.

If the MSS is not installed, the operator can skip the login and the machine will operate normally.

Components

The Machine Security System (MSS) consists of the following components:

- Electronic Control Module (ECM)
- Cat Bluetooth key fob (CATBTFOB)
- Machine display
- Bluetooth transceiver module (CATBTNT)
- Engine start switch

System Overview

The Machine Security System (MSS) is designed to restrict operation of a machine. A list of the authorized electronic keys and passcodes for a machine is contained in the ECM for the MSS. A valid Bluetooth key fob, mobile application, or passcode can disarm the MSS. If the MSS is disabled or not installed, any operator may access critical machine functions.

The Cat ® Electronic Technician (Cat ET) Service Tool can be used to program the ECM with the authorized keys and passcodes. Bluetooth devices and passcodes can be registered using the in-cab display if the operator is logged in to the system using a master access account.

When the engine start switch is turned to the ON position, the display boots up. If Bluetooth detection is enabled, the transceiver will receive a signal from any Bluetooth key that is present or from the mobile application. The ECM will then compare this ID to the list of authorized keys.

Note: If multiple devices are present, the first valid device detected by the transceiver will be read.

If the ID of the key matches an authorized key, the status indicator on the engine start switch will turn a green color and the MSS will disarm. This disarming will allow the operator access to critical functions of the machine.

If the ID of the key that is read does not match the list in the ECM, the status indicator will remain a red color. The MSS remains in the “armed” state and the machine will remain disabled.

If the MSS is disabled and the ID of the key matches an authorized key, the operator will be identified and allowed access to the critical machine functions. The operator will be able to save configurations and start the machine.

If the MSS is disabled and the ID of the key that is read does not match an authorized key, the operator must log in as a guest. The operator will not be able to save custom configurations but will have access to starting the engine.

Activating Bluetooth Functionality

For shipping purposes, Bluetooth functionality is deactivated. Ensure that Bluetooth functionality is active on your machine using the following procedure:

1. Ensure that the function is active from the radio screen:

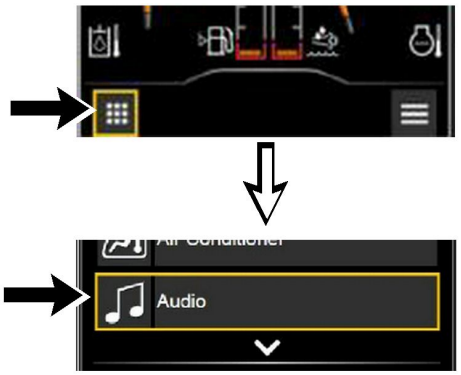

Illustration 352 g06319669

a. From the home screen, press the navigation button in the lower left corner, then select “Audio” .

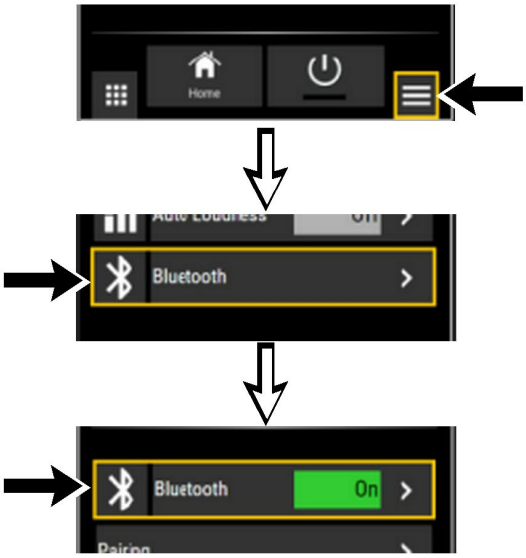

Illustration 353 g06319667

b. Press the radio function list menu button in the lower right corner, then select “Bluetooth” . Ensure that “Bluetooth” is set to “ON” .

Pairing Your Device to the Machine

Use to following procedure to pair your device to the machine:

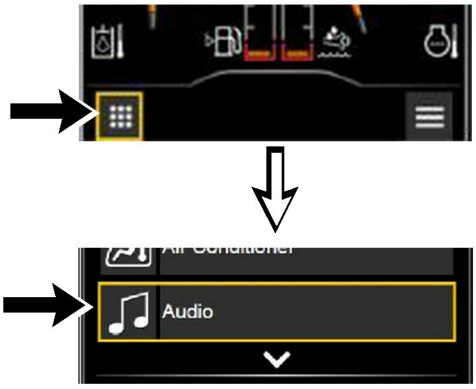

Illustration 354 g06319669

1. From the home screen, press the navigation button in the lower left corner, then select “Audio” .

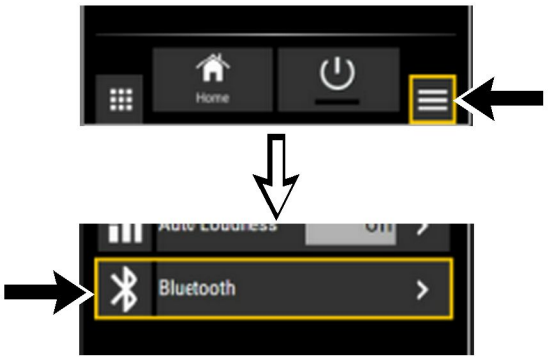

Illustration 355 g06319672

2. Press the radio function list menu button in the lower right corner, then select “Bluetooth” .

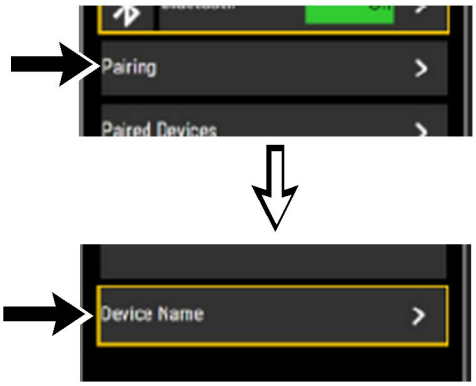

Illustration 356 g06319676

3. Select “Pairing” , then “Device Name” .

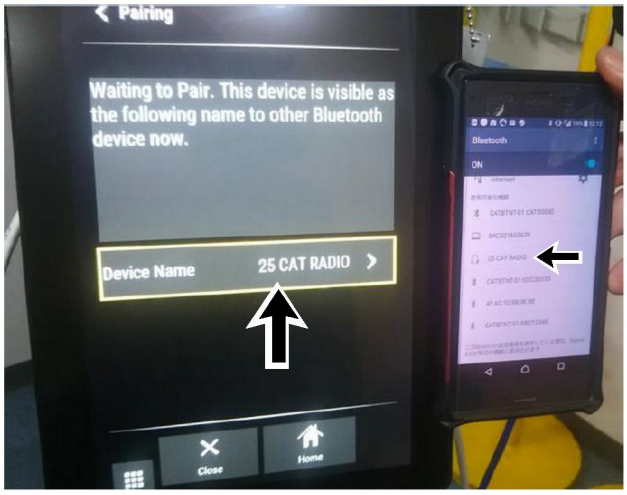

Illustration 357 g06319681

Machine name on monitoring system and operator device

4. Find your device on the list and pair the devices. Ensure that the devices are paired on your phone as well.

Note: The device name on your phone should be “## CAT RADIO” , with the number being from “00” to “99” .

Reading the ID of a Key

The Machine Security System (MSS) must identify a valid passcode, Bluetooth key fob ID, or Cat App: Fleet management mobile application ID.

When the engine start switch ring is turned to the ON position, the MSS will check the ID of any key fob or mobile application. If the ID matches a key ID stored in the machine ECM, the critical ECM functions are enabled. An enable message is also sent via the Cat ® data link or J1939 data link to the other ECMs on the machine. The machine will operate normally.

Note: If the machine ECM has failed or has been removed, the critical machine operations controlled by the other electronic control modules will not operate.

Armed

When the MSS is armed, critical machine functions are disabled. The MSS disables the power that is supplied to each component that is powered by the output drivers. The machine will not be able to operate normally.

There are two states of operation within the “armed” mode:

Engine Start Switch Ring Position OFF – When no power is applied to the MSS, the MSS will default to “armed” state. When power is applied to the MSS and the grace period has expired, the MSS will return to the “MSS Armed” .

Engine Start Ring Switch Position ON – When the engine start switch ring is first moved to the ON position, the display boots up and the system attempts to detect a Bluetooth key ID or mobile application ID. The ECM will continue reading until a valid key ID is read or a passcode is entered. If a valid key ID or passcode is not read, the MSS status indicator will remain red and the MSS remains armed.

Disarmed

When the MSS is disarmed, normal machine operation is allowed. A message is sent to the other machine ECMs over the Cat data link. or J1939 data link. The machine will be able to start. The green LED on the status indicator will illuminate.

There are multiple ways to disarm the machine:

- Use a valid passcode
- Use a valid Bluetooth key fob
- Use the Cat App: Fleet management mobile application
- Use the Cat ® Electronic Technician (Cat ET) Service Tool to configure the MSS bypass schedule to allow machine operations during scheduled periods of time during the week.

Grace Period

After a machine has been started successfully, the operator will have a grace period after the machine is turned off before the MSS is automatically armed. The operator is not required to arm the system manually.

During the grace period an operator can start the machine without a key ID or passcode. When the grace period expires, the MSS will rearm automatically.

If the MSS is unable to read a key ID, the system will remain armed. When the MSS identifies a key with an invalid key ID, the system will remain armed.

The grace period for a machine can be configured with Cat ET if a factory password or master level account is available.

Navigating the User Interface Touchscreen Display

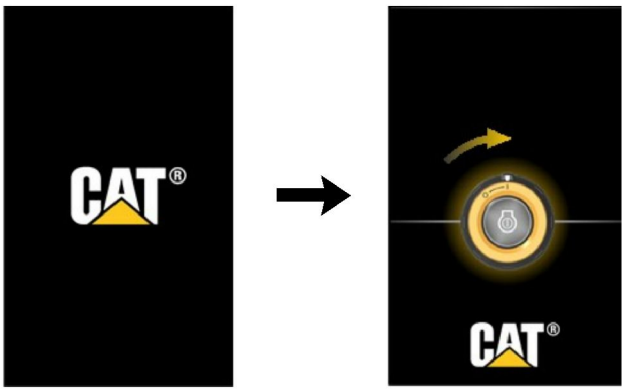

Illustration 358 g06210561

Startup sequence screens

The display will start up automatically after turning the battery disconnect switch to the ON position. The screen will prompt the operator to turn the engine start ring to the ON position. When the engine start ring is turned to the ON position, the display will navigate to the passcode entry screen.

If the operator has not turned the engine start ring to the ON position, the display will time out after 1 minute.

If the battery disconnect switch is already on and the display is off, the display will startup automatically after the engine start ring is powered on. The Cat screen will appear for a short time and then login keypad will appear.

Note: Avoid touching the screen with sharp objects.

The access level assigned to the operator can limit or expand the amount of freedom the user has to manage the system. The following paragraphs explain access levels.

There are three levels of operator access recognized by the touchscreen display. The following levels are available:

- Guest
- Standard
- Master

Guest – If an operator does not have an authenticated key or passcode, the user is able to bypass log in as a guest. Some menu features will not be available such as the options for saving configurations and operator management. If the Machine Security System (MSS) is enabled, guest operators cannot start the machine.

Standard – A standard operator is a registered user of the machine. Operators with this access level can start the engine whether or not the MSS is installed. This user may save a control configuration for future application.

Master – Master accounts can perform operator management in addition to all standard level functions.

Any “Standard” or “Master” account may be created or removed by a “Master” level operator.

Table 20

Selections and Access for the Touchscreen Display	
Access Level	**Operator Setting**
Guest	“Operator Input Configuration” “Response” “Change Operator”
Standard	“Operator Input Configuration” “Response” “Controls Setup” “Change Operator”
Master	“Operator Input Configuration” “Response” “Controls Setup” “Change Operator” “Manage Operator”

Operation of Status Indicator

Illustration 359 g06215426

Engine start switch with integrated MSS indicator

The Machine Security System (MSS) uses a status indicator that is integrated into the engine start switch in the cab. This indicator provides a visible alert for the security system.

The operator can use the status indicator to determine the status of the system or for troubleshooting.

Illustration 360 g06226442

Status indicator when the MSS is armed

When the MSS is armed, the status indicator will be red. The red light warns the operator that the machine is armed with the security system and that an operator login is required. The red LED will remain ON until a valid key is read while the key switch or engine start switch ring is in the ON position.

Illustration 361 g06226444

Status indicator when the MSS is disarmed or uninstalled

When the MSS is disarmed, the status indicator will be green. The green light notifies the operator that an operator is logged on the machine and the security system has been disarmed. The status indicator will be green if the MSS is not installed on the machine. Also, the green LED will remain ON after power down for the duration of the grace period. After the grace period, the MSS automatically returns to the “armed” mode.

For machines with a standard key switch, a separate status indicator will be available.

Operator Login

Any user may start the engine if the Machine Security System (MSS) is disabled.

If the MSS is active, only a “Standard” or “Master” account can start the machine engine. Before starting the machine engine, the security system must identify a registered operator. An operator can access the machine display using one of the following methods:

- Passcode
- Cat Bluetooth key
- Cat App: Fleet management mobile application

Passcode Entry

To log in using a passcode, refer to the following steps:

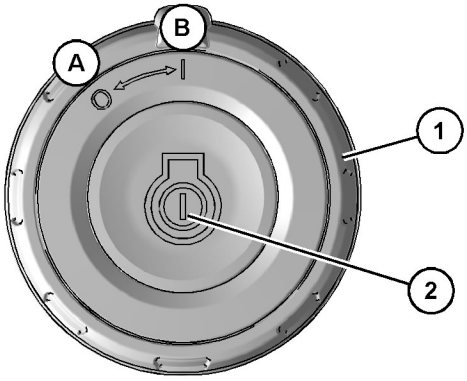

Illustration 362 g06180554

(A) Off
(B) On
(1) Engine start switch ring
(2) Engine start button

1. Turn engine start switch (1) to the ON position (B).

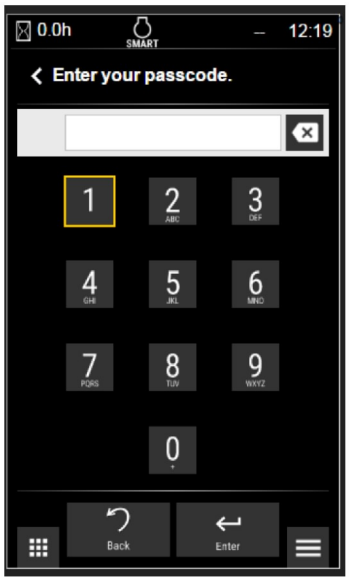

Illustration 363 g06209470

2. Enter a registered passcode using the monitor keypad and then press “Enter” .

Note: The jog dial or the numbered buttons on the right-side switch panel can also be used to enter the code.

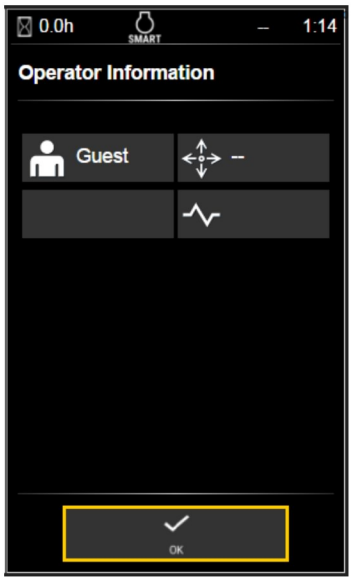

Illustration 364 g06211194

3. Select “Enter” to confirm the passcode. If a registered passcode is recognized, the operator information screen will appear on the display. If the MSS is not installed, the passcode screen will be bypassed automatically after 10 seconds. The operator will be logged in to the system as a guest. Refer to Illustration 364 .

4. Select “OK” to continue to the display homescreen.

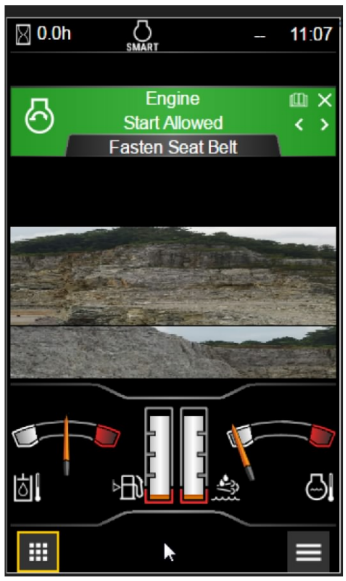

Illustration 365 g06209482

5. After an operator logs in to the system successfully, an “Engine Start Allowed” message will appear across the top of the monitor. Refer to Operation and Maintenance Manual, Engine Starting for instructions on starting the engine.

Invalid Passcode

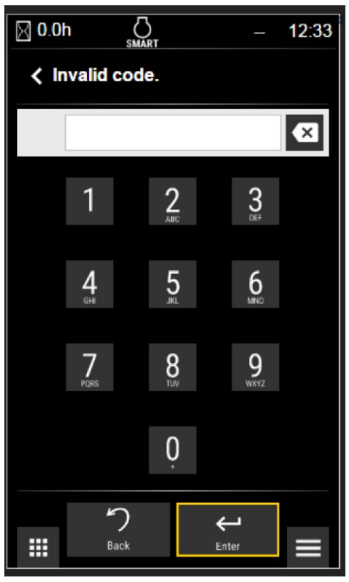

Illustration 366 g06209472

Invalid passcode screen

If a passcode is not recognized, the display will notify the user with an “Invalid code” message. Refer to Illustration 366 .

The operator has five tries to enter a valid passcode successfully. After a fifth unsuccessful attempt, a lockout screen will appear and remain on the display for a duration of 5 minutes.

Note: If the Machine Security System (MSS) is not active, the user can select the “Skip Login” button to avoid the lockout period. Refer to the “Bypass login” section for further information.

Bypass login

Operator login can be bypassed if the user selects the “Skip Login” button on the display. The operator will be logged in to the machine with “Guest” level access.

If the MSS is inactive, the operator will be able to start the engine as normal and view all display screens.

If the MSS is active on the machine, the operator is able to view all display screens but will not have access to starting the engine.

Bluetooth Entry

Alternatively, a Bluetooth Operator ID can be used to log in to the machine. For a Bluetooth key to be detected by the system, ensure that the following qualifications are met:

- The key must be registered with the machine
- The key must be within the cab
- Bluetooth setting must be enabled on the display

Refer to the following steps when logging in to a machine using the Bluetooth key:

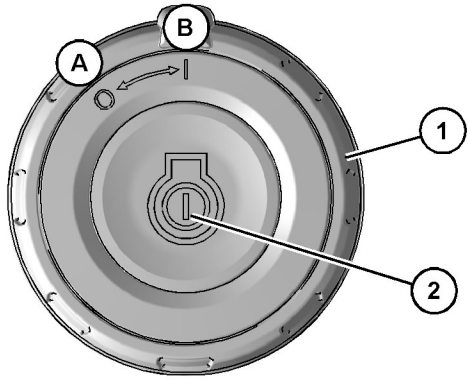

Illustration 367 g06180554

(A) Off
(B) On
(1) Engine start switch ring
(2) Engine start button

1. Turn engine start switch (1) to the ON position (B).

2. Wait several seconds for the system to detect the key when the passcode dialog appears. Once the key is detected, the “Operator Information” screen will display.

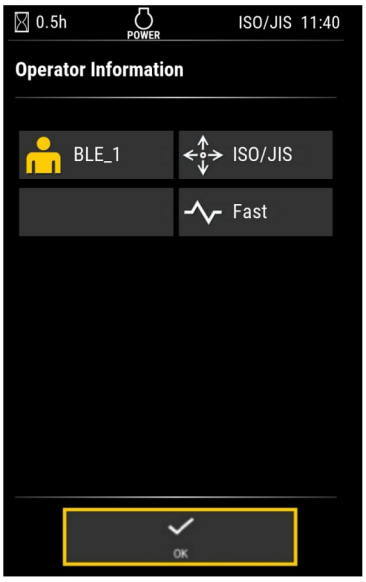

Illustration 368 g06209615

Bluetooth operator information screen

3. Select the “OK” button if the proper operator has been displayed.

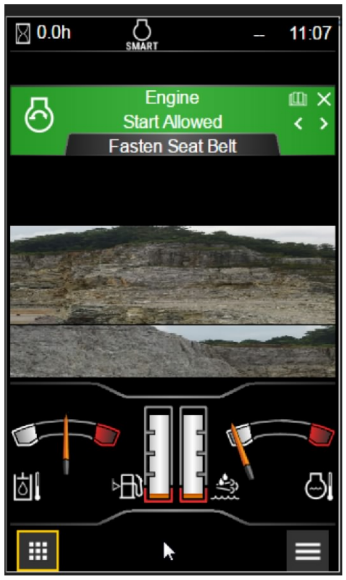

Illustration 369 g06209482

4. After an operator logs in to the system successfully, an “Engine Start Allowed” message will appear across the top of the monitor. Refer to Operation and Maintenance Manual, Engine Starting for instructions on starting the engine.

NOTICE

The access level will change to a “Guest” account automatically if the key is removed from the cab at any time. If the MSS is enabled and the engine is on when the key is removed from the cab, the operator will not be able to start the engine if turned off. To turn on the engine again without the Bluetooth key, the operator will need to log in a registered account using either the smart phone application or passcode.

Note: If multiple Bluetooth devices are within the cab, the system will select the first device detected by the Bluetooth transceiver as the active operator.

Cat ®Fleet Management Mobile Application

Operators can also log in to a machine using the Cat App: Fleet management mobile application. For the application to be detected by the system, ensure that the following qualifications are met:

- The Mobile Device ID (MDID) of the mobile application must be assigned to the machine in the Operator Management System (OMS)

Note: It is not possible to assign mobile devices through the MSS interface.

- The mobile device must be within the cab

- “Operator Management Bluetooth Device Enabled Status” is enabled (Cat ET Configuration)

Note: For adding an operator, adding MDID to the machine key list, and pushing the machine key list from the OMS to the machine refer to the OMS documentation at:

https://myoperators.cat.com/

Mobile Device / Operating Software Compatibility

Table 21

Mobile Device / Operating Software Compatibility		
Make	**Model**	**Operating Software**
Android	Varies	Android 8.x Oreo and up (Preferably Android 9.x Pie)
Apple	iPhone 6/ iPhone 6 Plus and up	iOS 11.0 and up (Preferably 12)

Note: Android mobile hardware support for Bluetooth can vary, so it is possible that a mobile device running Android 8.x software or higher could have hardware that does not support Bluetooth 4.1.

Mobile Application Entry (Android Devices)

To log in using the Cat App: Fleet management mobile application, refer to the following steps:

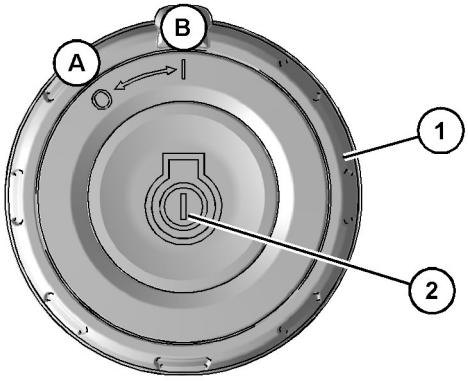

Illustration 370 g06180554

(A) Off
(B) On
(1) Engine start switch ring
(2) Engine start button

1. Turn engine start switch (1) to the ON position (B).

Illustration 371 g06400799

2. Open the Cat App: Fleet management mobile application on the mobile device.

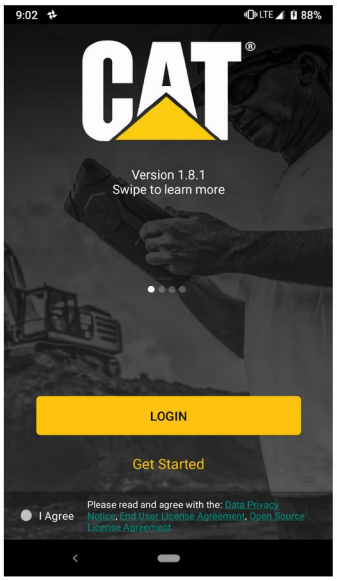

Illustration 372 g06433500

3. Click “I Agree” to agree with the End-User License Agreement and sign in with Cat eCustomer account credentials.

Note: If you do not have a Cat eCustomer account, click “Get Started” to create one.

4. Select “Login” .

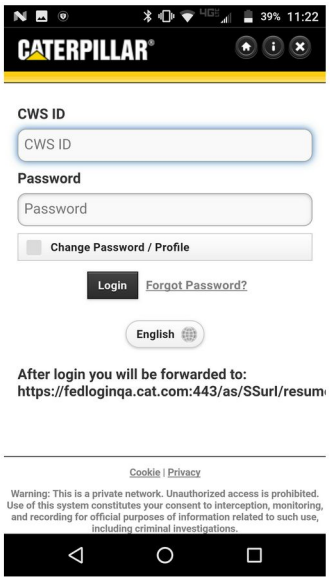

Illustration 373 g06214518

CWS login screen

5. Enter Cat eCustomer account credentials.

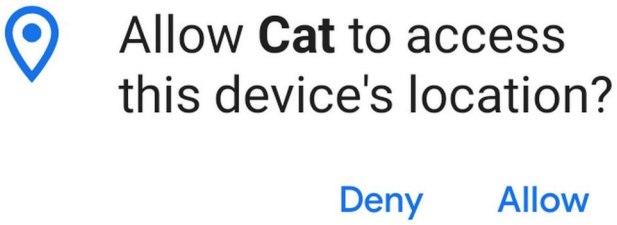

Illustration 374 g06400826

6. Click “Allow” to enable the Cat App: Fleet management mobile application to work as designed.

Note: Cat App: Fleet management requires access to the mobile device location to use Bluetooth radio to connect to Cat machines.

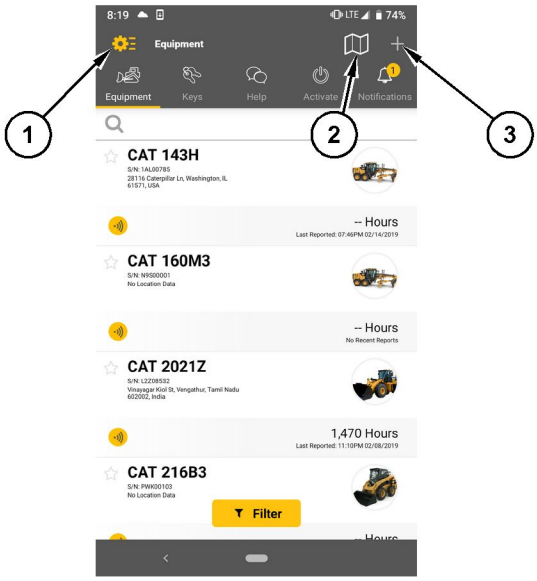

Illustration 375 g06433507

(1) Menu Icon
(2) Map Icon
(3) Add Equipment Icon

7. Upon login, the Cat App: Fleet management mobile application will open onto the equipment tab.

Note: The “Equipment” tab will be empty on the first login.

The Menu Icon (1) includes “Preferences” , “Notifications and Alerts” , along with various documents covering the end-user license agreement, and privacy notice.

By tapping the Map Icon (2), the operator will be able to see the location of each vehicle on their “Equipment” tab on a map.

If a vehicle is not equipped with a telematics device, or the vehicle is a non-caterpillar machine it may be necessary to add it manually using the Add Equipment Icon (3).

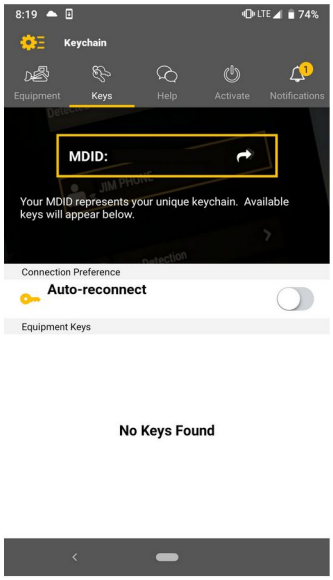

Illustration 376 g06433513

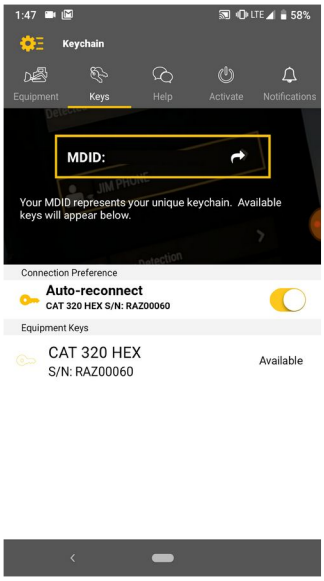

Illustration 377 g06433520

8. Go to the keys tab.

Keys are necessary to connect to vehicles. If no keys are given, the screen in Illustration 376 will be displayed. The MDID is necessary to assign keys to the user account. The MDID of Android devices is linked to the app.

Note: Uninstalling the Cat App: Fleet management mobile application will result in the MDID and keys being deleted. The Sim card of the phone contains the MDID information, damage to the Sim card may result in keys being lost, if the phone is replaced transfer the Sim card to avoid key loss.

9. Pull the “Equipment Keys” down to refresh the list once the Fleet/Key configuration process has finished. Wait up to 30 seconds until the keys populate. If the keys do not populate, check that the MDID is correct and that the list was pushed properly through OMS.

10. Ensure that the machine is ON to connect to a machine.

The machine display should prompt the operator for a password. In the “Keys” tab in the Cat App: Fleet management mobile application and tap the key that matches the machine. If a vehicle is OFF, currently occupied, or too far away the key will be grayed out and say “Out of range” .

Note: If the machine has a user signed in that is not in the cab and it has become necessary for a different user to operate the machine, change the operator in operator setting.

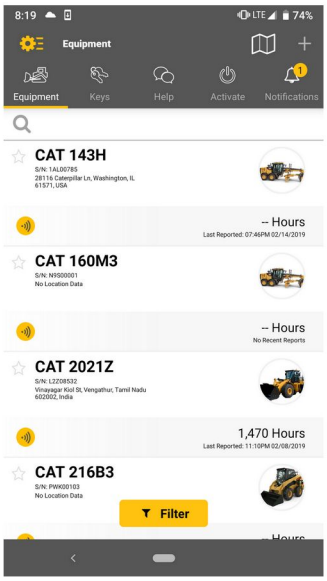

Illustration 378 g06433521

11. Access the “Equipment” tab by tapping it. The machines associated with the keys should have populated. To learn more about a machine, tap it.

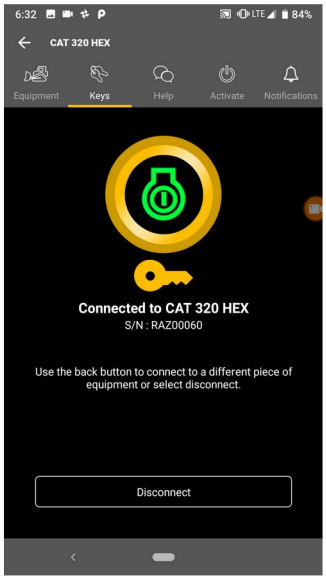

Illustration 379 g06433525

12. Press the “Disconnect” button if the user wishes to disconnect. If the user wants to switch machines, tap the arrow in the upper left then tap the machine the operator wants to be switched to.

Note: Disconnect from vehicles if the user is not going to be using a vehicle again within a short time.

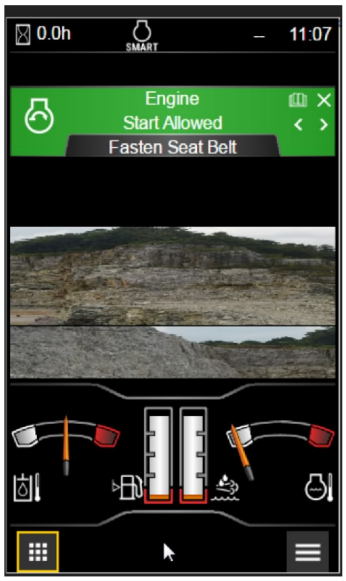

Illustration 380 g06209482

13. After an operator logs in to the system successfully, an “Engine Start Allowed” message will appear across the top of the monitor. Refer to Operation and Maintenance Manual, Engine Starting for instructions on starting the engine.

Mobile Application Entry (iOS Devices)

To log in using the Cat App: Fleet management mobile application, refer to the following steps:

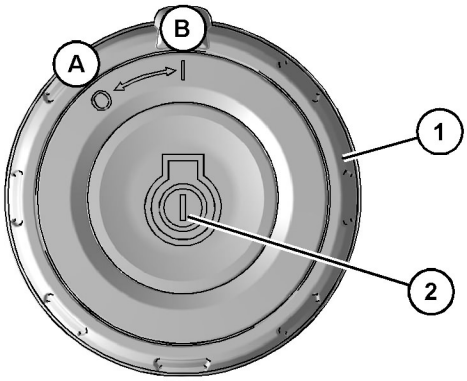

Illustration 381 g06180554

(A) Off
(B) On
(1) Engine start switch ring
(2) Engine start button

1. Turn engine start switch (1) to the ON position (B).

2. Ensure that Bluetooth detection is enabled on the in-cab display.

Illustration 382 g06400799

Cat App: Fleet management mobile application icon

3. Open the Cat App: Fleet management mobile application on the mobile device.

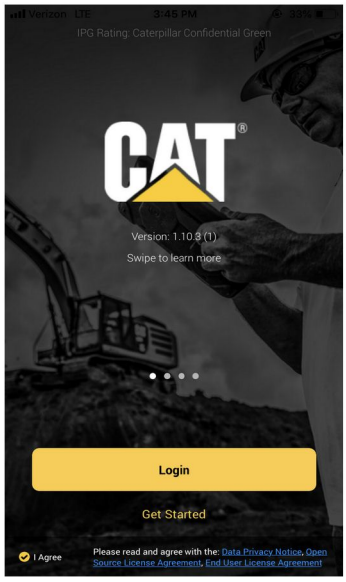

Illustration 383 g06433528

4. Click “I Agree” to agree with the End-User License Agreement and sign in with Cat eCustomer account credentials.

Note: If you do not have a Cat eCustomer account, click “Get Started” to create one.

5. Select “Login” .

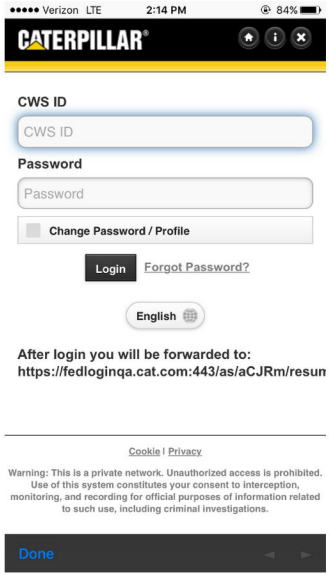

Illustration 384 g06214875

6. Enter eCustomer account credentials to log in.

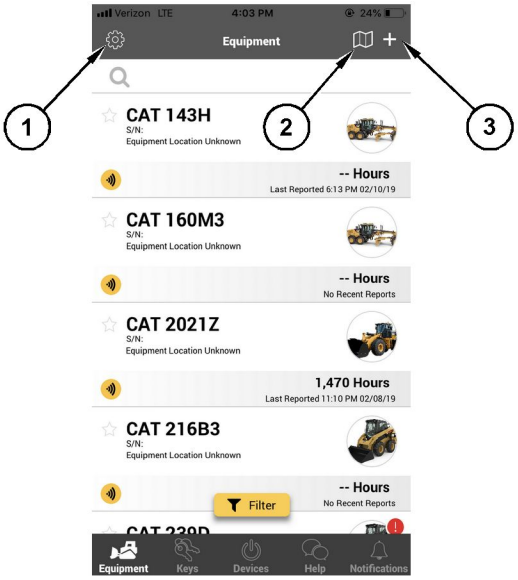

Illustration 385 g06433533

(1) Menu Icon
(2) Map Icon
(3) Add Equipment Icon

7. Upon login the Cat App: Fleet management mobile application will open onto the equipment tab.

Note: The equipment tab will be empty on the first login.

The Menu Icon (1) includes “Preferences” , “Notifications and Alerts” , along with various documents covering the end-user license agreement, and privacy notice.

By tapping the Map (2), the operator will be able to see the location of each vehicle on the equipment tab on a map.

When using this for the first time, the Cat App: Fleet management mobile application will ask if it can use the location feature. Allow the location feature to use the map.

If a vehicle is not equipped with a telematics device, or the vehicle is a non-caterpillar machine it may be necessary to add it manually using the add equipment button (3).

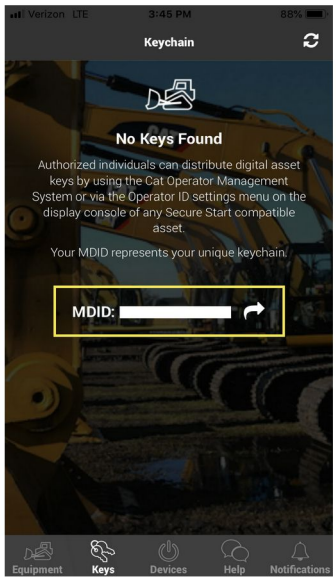

Illustration 386 g06433536

8. Access the “Keys” tab. Keys are necessary to connect to vehicles. If no keys are given, the screen in Illustration 386 will be displayed. The MDID is necessary to assign keys to the user account. The MDID of IOS devices is linked to the user account.

9. Once the Fleet/Key configuration process has finished, tap the refresh button in the Cat App: Fleet management mobile application top right. Wait up to 30 seconds until the keys populate. If the keys do not populate, check that the MDID is correct and that the list was pushed properly in OMS.

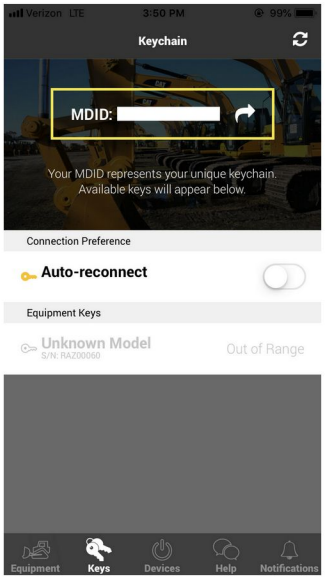

Illustration 387 g06433538

10. To connect to a machine, ensure that the machine is ON. The machine display should prompt the operator for a password. At this point on the Cat App: Fleet management mobile application go to the “Keys” tab and tap the key that matches the machine. If a vehicle is OFF, currently occupied, or too far away the key will be grayed out and say “Out of range” .

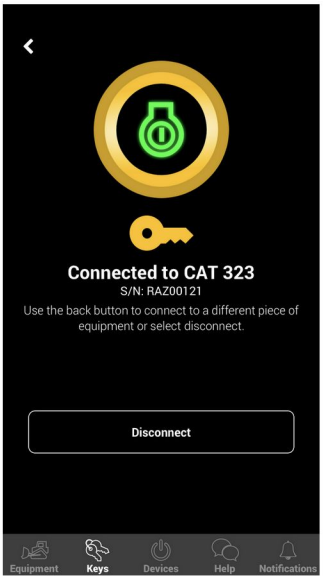

Illustration 388 g06433540

11. Press the disconnect button if the user wishes to disconnect. If the user wants to switch machines tap the arrow in the upper left, then tap the key of the machine to switch to.

Note: Disconnect from vehicle if the user will not be using the vehicle again within a short time.

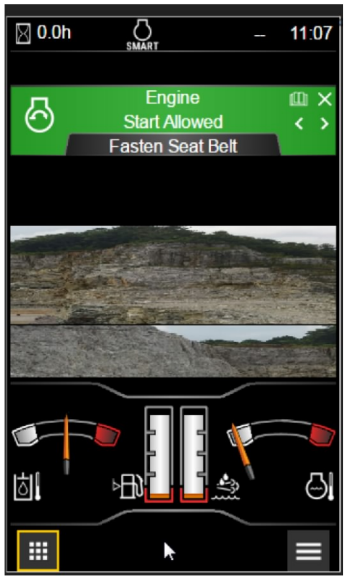

Illustration 389 g06209482

12. After an operator logs in to the system successfully, an “Engine Start Allowed” message will appear across the top of the monitor. Refer to Operation and Maintenance Manual, Engine Starting for instructions on starting the engine.

Engine Start Switch Troubleshooting

Table 22

Switch Status	Possible Cause	Resolution
Engine startswitch is not illuminated	Engine start accessory power not on	Turn engine start switch ring to ON position
	Power management triggered	Cycle engine start switch ring and try to restart
Engine start switch is green	Starting component failure	Contact your Cat dealer
Engine start switch is red	Machine interlock conditions not met	Hydraulic lock in LOCKED position
	Engine shut down without cycling start switch ring	Cycle engine start switch ring and try restart
	Operator not authenticated (Passcode login)	Add operator to machine authorized user list
		Switch operator from guest mode using display
	Operator not authenticated (Bluetooth key)	Add operator to machine authorized user list
		Replace key fob battery
		Ensure more than 4.5 m (15 ft) from other Bluetooth equipped machine

(continued)

(Table 22, contd)

Switch Status	Possible Cause	Resolution
		Alternately login with display passcode or contact local Cat dealer
	Operator not authenticated (Cat Fleet management app)	Add operator to machine authorized user list
		Ensure more than 4.5 m (15 ft) from other Bluetooth equipped machine
		Enable phone Bluetooth and connect Cat Fleet management app
		Change Bluetooth system enable status to enabled (Cat dealer)
		Contact local Cat dealer if unable to see machine Bluetooth device

i08257805

Monitoring System

SMCS Code: 7451; 7490

WARNING

Do not operate the machine if the monitor is not functioning (for example, monitor has a black screen or is not responding) when the key switch is in the ON position.

The monitor provides images from the camera system and other information for safe machine operation. Operating the machine without a properly functioning monitor may result in injury or death. If the monitor is not functioning, place the machine in a safe state by following the procedures for stopping and parking the machine. Determine the cause of the monitor malfunction and correct before returning the machine to service.

NOTICE

When the monitor provides a warning, immediately check the monitor and perform the required action or maintenance as indicated by the monitor.

The monitor indicator does not guarantee that the machine is in a good condition. Do not use the monitor panel as the only method of inspection. Maintenance and inspection of the machine must be performed on a regular basis. See the Maintenance Section of this Operation and Maintenance Manual.

General Information

Reference: For complete monitoring system information, refer to M0109053, “Next Generation Hydraulic Excavator Monitoring System Supplement”.

The monitoring system is an input and an output of the Machine Control System. The monitor has a multi-touch 8 inch or 10 inch display. The Machine Control System communicates back and forth on the data link. The monitoring system consists of the following components:

- Display (with numerous screens and menus)
- Indicators
- Gauges
- Soft Switch Panel
- Jog Dial

Illustration 390 g06397192

(1) Action Lamps
(2) Status Information Area
(3) Event Indicator Area
(4) Camera View Area
(5) Gauge Area
(6) Navigation Area
(7) Function List
(8) Shortcuts

The monitoring system displays various warnings and information about the condition of the machine, and the machines surrounding with various camera views. There are gauges and several alert indicators included on monitoring system display. Each gauge is dedicated to a parameter within a machine system. The monitoring system will allow the user to do the following:

- View Surroundings
- Interpret status information
- Interpret parameters
- View OMM
- View service intervals
- Perform calibrations
- Troubleshoot machine systems

Action Lamps (1)

The action lamps illuminate to show that a problem has occurred with the machine.

Status Information Area (2)

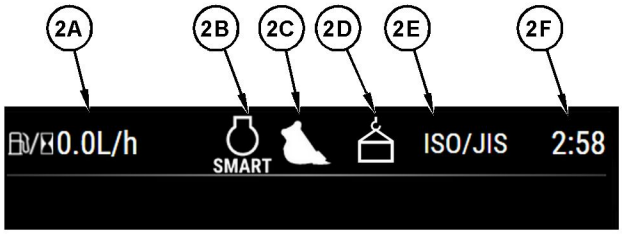

Illustration 391 g06464039

(2A) Multi Status Information
(2B) Seatbelt Switch Status (if equipped) / Power Mode
(2C) Work tool
(2D) Heavy Lift / Cat ® Dig Boost (if equipped)
(2E) Lever Pattern / Fuel Level
(2F) Clock

Reference: For complete status information, refer to M0109053, “Next Generation Hydraulic Excavator Monitoring System Supplement”.

Event Indicator Area (3)

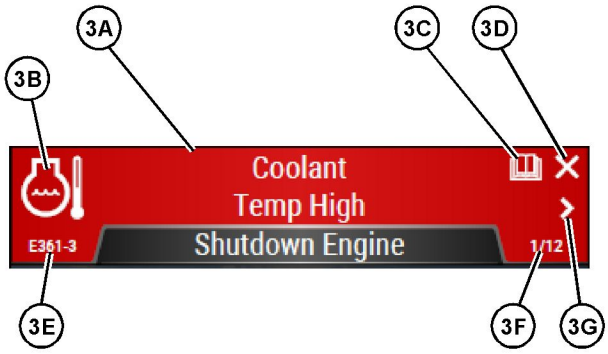

Illustration 392 g06223056

(3A) Event Description
(3B) Event Symbol
(3C) e-OMM
(3D) Close
(3E) Event ID
(3F) Order Number / Total Number
(3G) Arrow (Next)

Event Description (3A) – This area will display the description of pop-up message of the impending problem.

- Line 1 : System
- Line 2 : Condition
- Line 3 : Action to be taken

Event Symbol (3B) – This area will display the symbol of the problem

e-OMM (3C) – This area will indicate that the e-OMM is available for this event. If e-OMM is not available for this event, the area will be blank.

Close (3D) – Select this to hide the pop-up message and display the event icon list.

Event ID (3E) – The identification number for the event will be shown here.

Priority Number / Total Number (3F) – The priority number of the pop-up message is displayed next to the total number of messages. The messages are ordered from the highest to the lowest priority.

Arrow (3G) – The arrow is shown when there is a next or previous message. Select the arrow to display the next or previous message.

Camera View (4)

This area on the monitor displays the view of the cameras. A rear view camera mounted on top of the counterweight and an optional side view camera mounted in the side panel next to the hydraulic tank.

If both rear view camera and side view camera are equipped, the monitor screen can be toggled to show:

- Rear only
- Side only
- Split vertically
- Split horizontally

The camera view can be toggled when the cursor is on the camera view area and the area is touched or the jog dial is turned.

Gauge Area (5)

Fuel Level – This gauge indicates the amount of fuel that is remaining in the fuel tank. When the fuel gauge is in the red range, add fuel immediately.

Hydraulic Oil Temperature – This gauge indicates the temperature of the hydraulic oil. The normal operating range is the green range. If the gauge is in the white range, the engine and machine warm-up is required. Refer to Operation and Maintenance Manual, “Engine and Machine Warm-up”. If the gauge reaches the red range, reduce the load on the system. If the gauge stays in the red range, stop the machine and investigate the cause of the problem.

Engine Coolant Temperature – This gauge indicates the temperature of the engine coolant. The normal operating range is the green range. If the gauge is in the white range, the engine and machine warm-up is required. Refer to Operation and Maintenance Manual, “Engine and Machine Warm-up”. If the gauge reaches the red range, stop the machine and investigate the cause of the problem.

Diesel Exhaust Fluid (DEF) Gauge – This gauge indicates the level of DEF fluid in the DEF tank. When the DEF gauge is in the red range, add DEF immediately.

Navigation Bar (6)

Apps Key – Allows you to display different information in the gauge area related to operation. Also contains air conditioner and audio controls. This key includes the settings screen allowing change of a multitude of parameters, some password protected.

Function List Key – Allows you to turn on and off various functions related to the active screen. This icon only appears in certain screens where additional settings are necessary.

Shortcuts – Allows you to set certain shortcuts on the navigation bar.

Machine Warnings

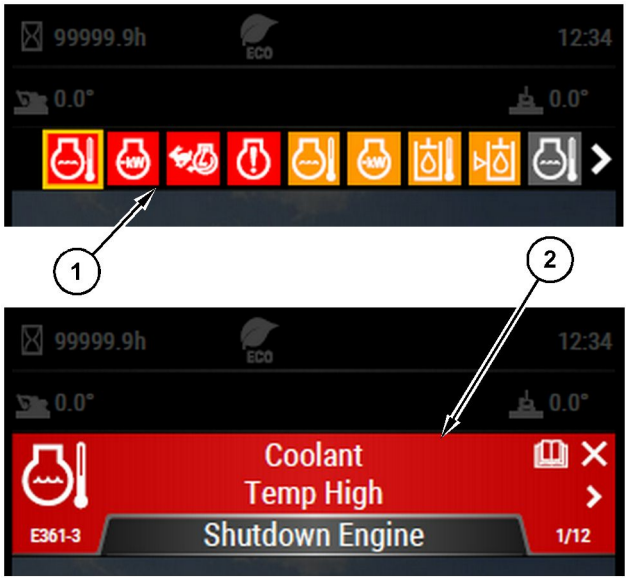

Illustration 393 g06223766

Event Indicator Area

(1) Event Icon List
(2) Pop-up Event Message

The Monitor will display warnings, and log events for machine conditions that are not within normal operating parameters.

The event warnings are classified into three warning levels. Warning Level 1 represents the least severe problem and Warning Level 3 represents the most severe problem. The warning levels, monitor response, and the required operator actions are given below.

Warning Level 1 (Gray) – Requires operator awareness. The icon and pop-up message will both appear gray.

Warning Level 2 (Amber) – Requires a change in the operation of the machine or a change in the maintenance of the machine to correct the condition. The icon and pop-up message will both appear amber and the action lamp will blink.

Warning Level 3 (Red) – Requires immediate shutdown of the machine to prevent damage to the machine or personnel. The icon and pop-up message will both appear red, the action lamp will blink, and the buzzer will sound.

When multiple warnings are present in the system, the highest warning is shown first. Press the right or left key to view all the logged warnings. If no keys are pressed within a few seconds, the display will return to the highest warning.

Reference: For complete machine warning information, refer to M0109053, “Next Generation Hydraulic Excavator Monitoring System Supplement”.

Logging In

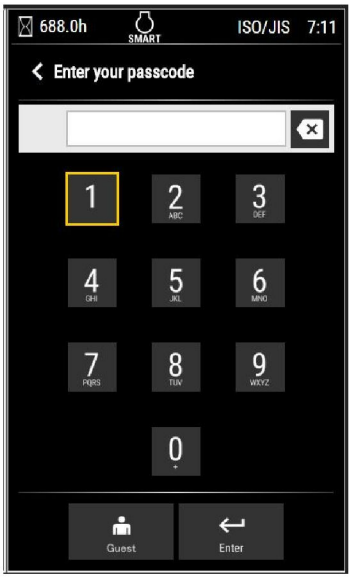

Illustration 394 g06242074

There are different ways to access the monitor which include:

- Guest access
- Passcode access
- Bluetooth access
- Cat ® Fleet Management app

For more information on logging in, refer to Operation and Maintenance Manual, Machine Security System - Operator Login.

Navigation

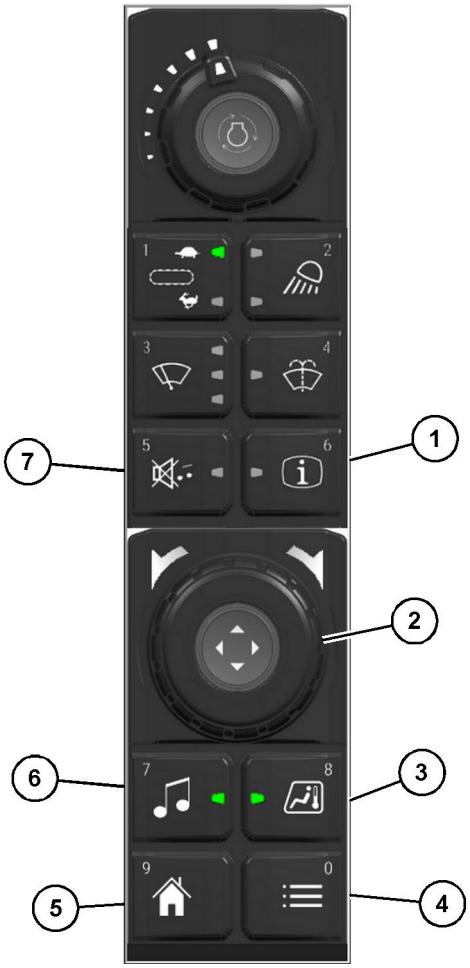

Illustration 395 g06464384

Right side switch panel

(1) Operator information button
(2) Jog dial
(3) Air conditioner button
(4) Next menu button
(5) Home button
(6) Audio button
(7) Mute button

The monitor can be navigated by touch screen or the switch panel. Switch panel components can be used to interface with the monitor in the following ways:

Operator information button (1) – Press and hold this button to access the operator information screen. This screen shows information such as operator settings.

Jog dial (2) – Rotate the jog dial to highlight menu items in the monitor. Push the jog dial down to select the highlighted item.

Air conditioner button (3) – Press the button to access the air conditioner controls.

Next menu button (4) – This button is equivalent to the function list key on the monitor. This button can only be used on screens where the function list key is shown.

Home button (5) – Press this button to return to the main screen.

Audio button (6) – Press this button to access the audio controls.

Mute button (7) – Press this button to mute the audio. Press the button again to unmute the audio.

Each of the buttons is also assigned a number which is imprinted in the top corner of the button. These buttons can be used to enter the numerical passcodes used to log in to the monitor.

Application Menu

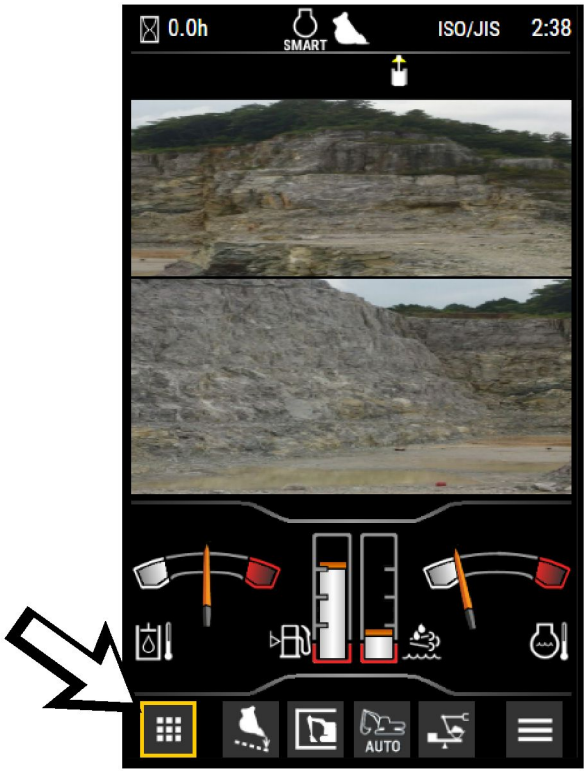

Illustration 396 g06391692

Press the application menu button to access the Application menu.

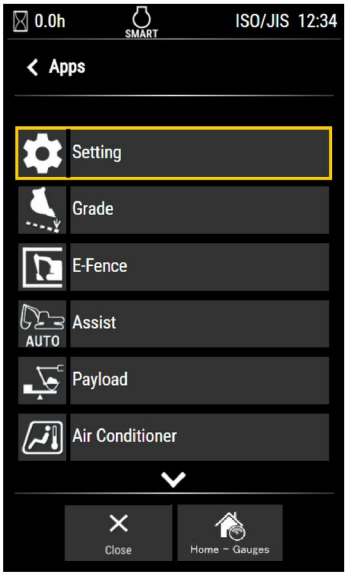

Illustration 397 g06247445

The Application menu “(Apps)” contains the list of applications. The available applications may differ depending on the machine configuration or software version.

Illustration 398 g06263058

Once an “App” has been selected, an operator can sort through the available “Apps” by swiping the selected area left or right.

Reference: For complete application menu information, refer to M0109053, “Next Generation Hydraulic Excavator Monitoring System Supplement”.

Setting Menu

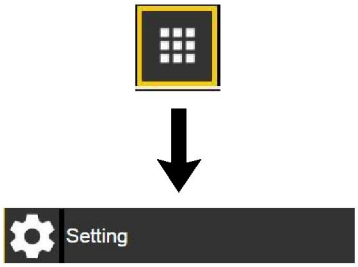

Illustration 399 g06213909

From the main screen, press the application menu button. In the Application menu, select “Setting” .

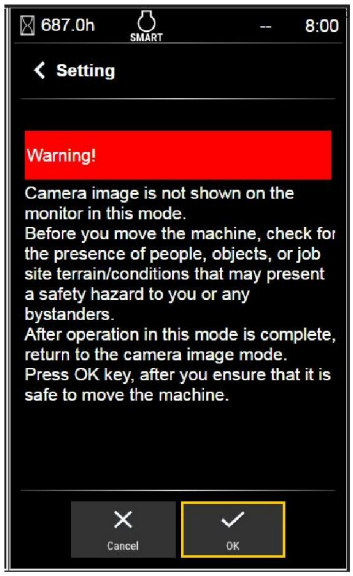

Illustration 400 g06217518

A warning will appear notifying the operator that the camera is not visible in the Setting menu. After you have read the warning and understand the content, press the “OK” button.

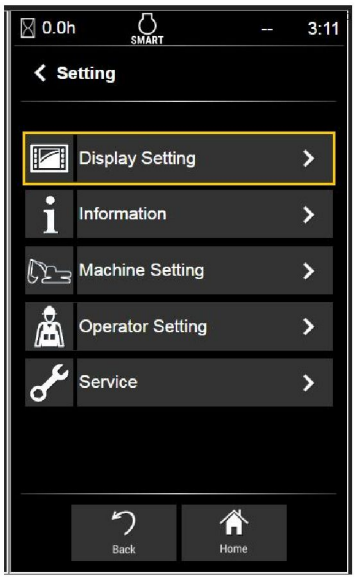

Illustration 401 g06213929

The Setting menu contains the following menu items:

- Display Setting
- Information
- Machine Setting
- Operator Setting
- Service

Note: A dealer password is necessary to access the Service menu.

Machine Setting

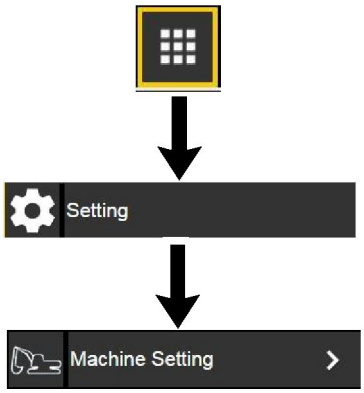

Illustration 402 g06217583

From the main screen, press the application menu button. In the Application menu, select “Setting” . Next, select “Machine Setting” .

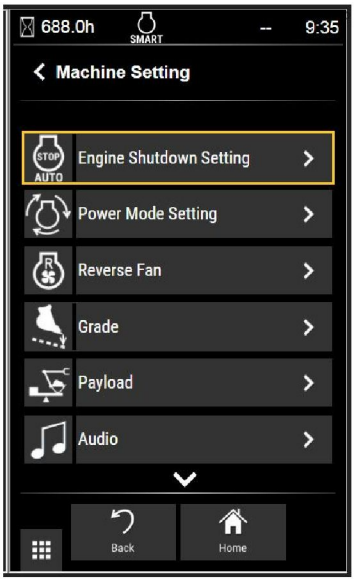

Illustration 403 g06261306

The Machine Setting menu may differ depending on the machine configuration or software version. Basic settings are described below.

Reference: For complete machine settings information, refer to M0109053, “Next Generation Hydraulic Excavator Monitoring System Supplement”.

Audio

The Audio screen allows the user to choose the radio region, enable Bluetooth, pair devices, and scan for Digital Audio Broadcast (DAB) channels.

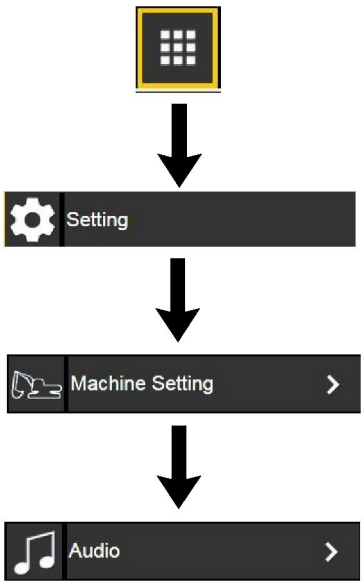

Illustration 404 g06261319

From the main screen, press the application menu button. In the Application menu, select “Setting” . Next, select “Machine Setting” , and then “Audio” .

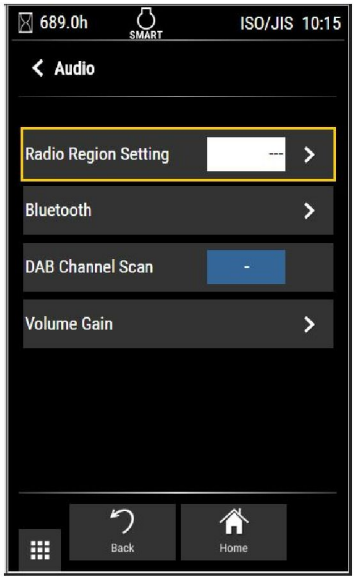

Illustration 405 g06241515

The Audio screen contains the following menu items:

- Radio Region Setting - Choose the radio region from the list of locations around the world.
- Bluetooth - Allows the operator to enable Bluetooth and pair a phone. This menu is also available through the main Audio screen. Refer to Operation and Maintenance Manual, Monitoring System - Bluetooth for information on the Bluetooth screen.
- DAB Channel Scan - Start a scan to find DAB channels in the area with good reception.
- Volume Gain - Allows the user to individually adjust the gain on various outputs such as the AM radio, FM radio, and the phone.

Auto Warm Up

The Auto Warm Up screen allows the user to enable and set the auto warm-up feature. This feature automatically starts a warm-up period when the engine is started and the hydraulic oil is below the set temperature.

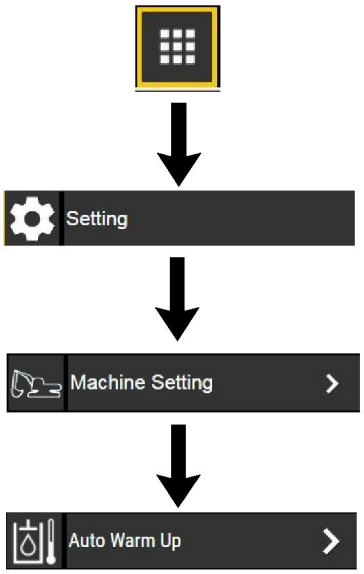

Illustration 406 g06261321

From the main screen, press the application menu button. In the Application menu, select “Setting” . Next, select “Machine Setting” , and then “Auto Warm Up” .

Illustration 407 g06219830

To set the auto warm-up temperature, press the “Auto Warm Up Target Temp” window, then enter the temperature. If the hydraulic oil is below the set temperature, the auto warm-up feature will activate after the engine is started.

Sleep Time

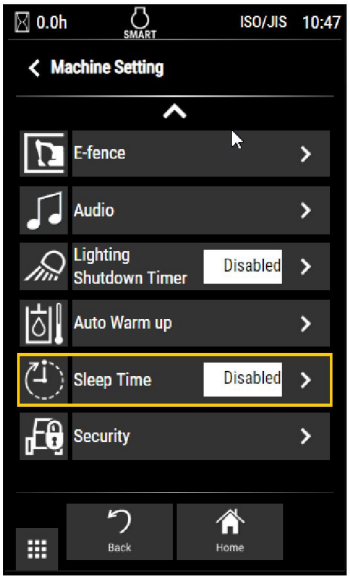

Illustration 408 g06360101

The Sleep time Setting feature allows the user to set a sleep timer for the engine start switch. If the start switch is left in the ON position, power will automatically shut off once the chosen timer interval has elapsed.

Security

Note: Master level access is required to adjust security settings.

The Security screen allows the user to set the operator lockout time. The lockout time is the amount of time after engine shutdown that an operator can start the engine without logging back in to the monitor.

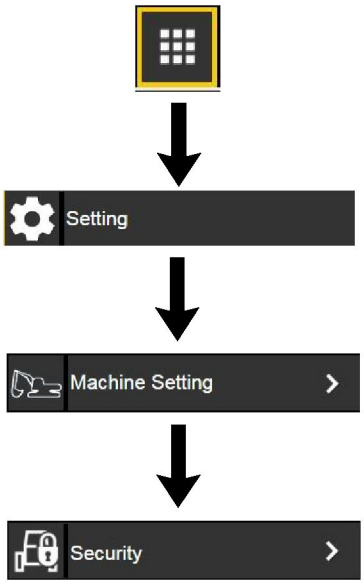

Illustration 409 g06261324

From the main screen, press the application menu button. In the Application menu, select “Setting” . Next, select “Machine Setting” , and then “Security” .

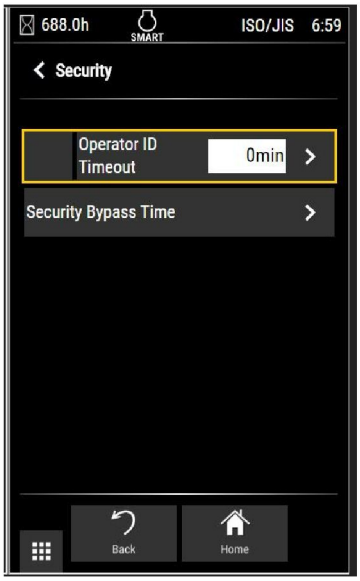

Illustration 410 g06242069

Select “Operator ID Timeout” to select the amount of time before the operators passcode times out after engine shutdown. To block out periods of time throughout the week to bypass security, select “Security Bypass Time” .

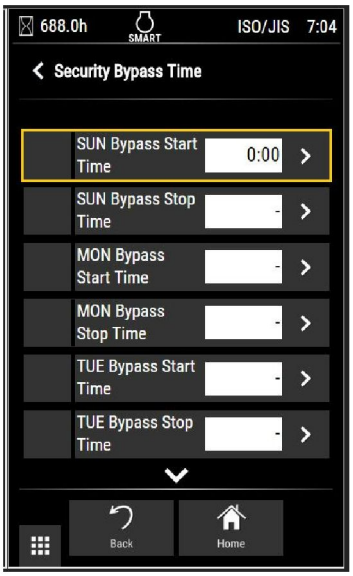

Illustration 411 g06242071

Enter the times and the days to bypass the security system.

Operator Setting

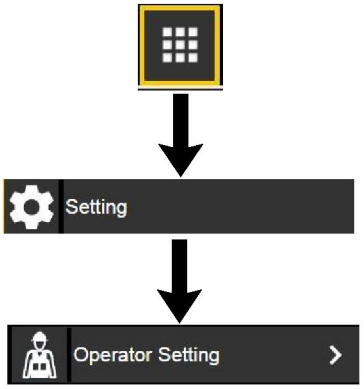

Illustration 412 g06217328

From the main screen, press the application menu button. In the Application menu, select “Setting” . Next, select “Operator Setting” .

Illustration 413 g06261330

The Operator Setting menu contains the following menu items:

- Operator Inputs Configuration
- Response

Reference: For complete operator settings information, refer to M0109053, “Next Generation Hydraulic Excavator Monitoring System Supplement”.

Operator Inputs Configuration

The operator inputs configuration screen allows the operator to configure the joystick buttons for personal preference. The settings will be stored in the preferences for that login ID.

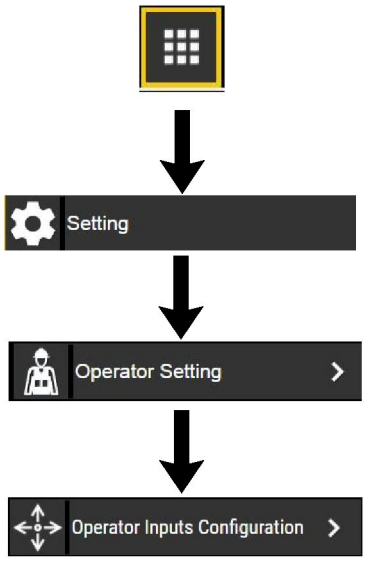

Illustration 414 g06261334

From the main screen, press the application menu button. In the Application menu, select “Setting” . Next, select “Operator Setting” , then “Operator Inputs Configuration” .

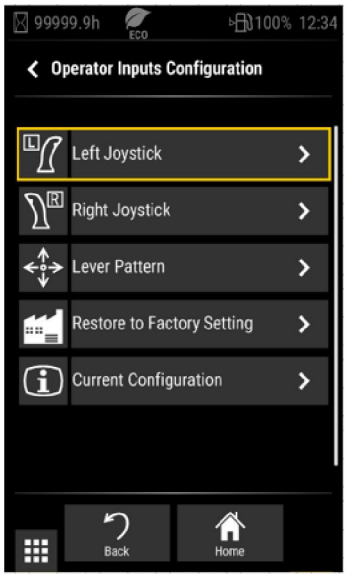

Illustration 415 g06222026

Choose the operator input to configure.

Lever Pattern

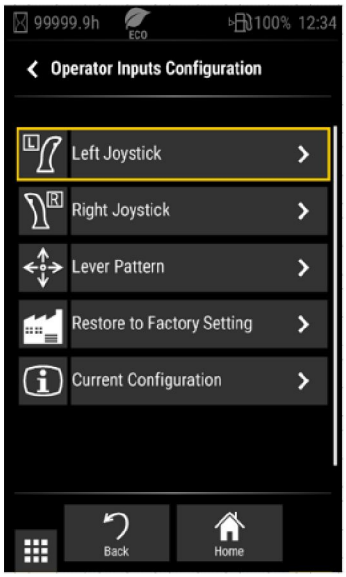

Illustration 416 g06222026

From the Operator Inputs Configuration screen, select “Lever Pattern” .

Select the desired lever pattern from the menu items. Press the “Home” button to return to the main screen.

Restore to Factory Setting

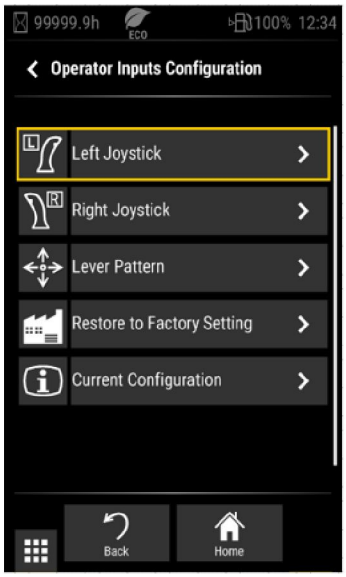

Illustration 417 g06222026

From the Operator Inputs Configuration screen, select “Restore to Factory Setting” .

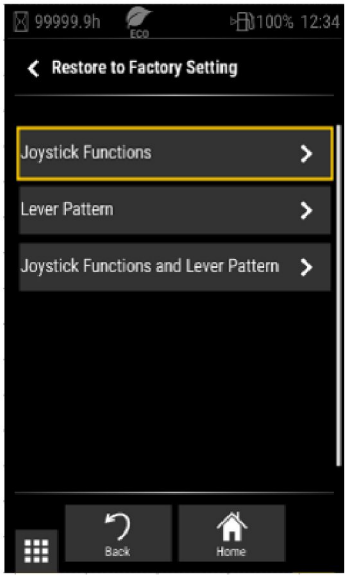

Illustration 418 g06222053

Select the item from the list to be restored.

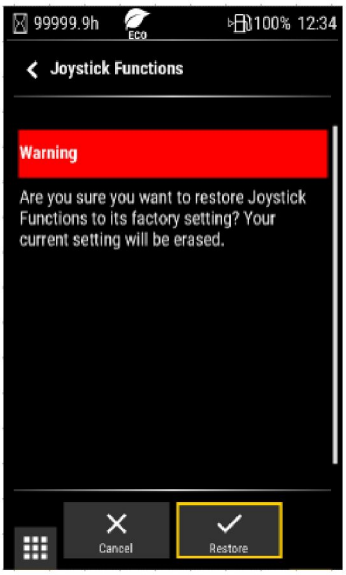

Illustration 419 g06222061

A warning will appear asking if you want to proceed. Press “Restore” to restore the settings or press “Cancel” to abort. After pressing “Restore” , the operator information screen will appear to show the new button assignments. Press the “OK” button to return to the main screen.

Air Conditioner

Refer to Operation and Maintenance Manual, Air Conditioning and Heating Control for coverage of the air conditioner screen in the monitor.

Audio

Refer to Operation and Maintenance Manual, Radio for coverage of the audio screen in the monitor.

Phone

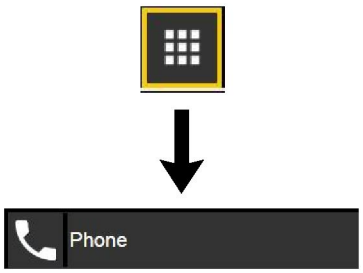

Illustration 420 g06213901

From the main screen, press the application menu button. In the Application menu, select “Phone” .

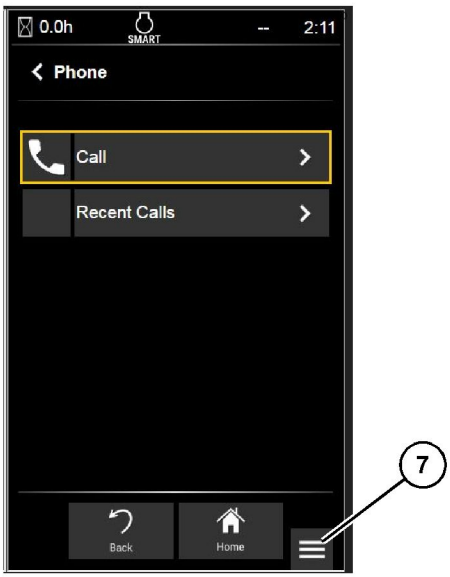

Illustration 421 g06340470

To make a call, select “Call” , then use the keypad to dial the number.

Note: There must be a paired phone in the cab and Bluetooth enabled to make a call.

Reference: For phone and Bluetooth settings, refer to M0109053, “Next Generation Hydraulic Excavator Monitoring System Supplement”.

Bucket/Work Tool Setting

The Bucket/Work Tool Setting screen allows the operator to choose the tool being used for work.

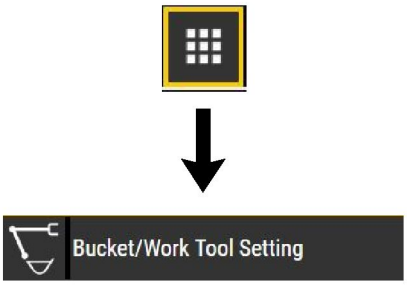

Illustration 422 g06220041

From the main screen, press the application menu button. In the Application menu, select “Bucket/Work Tool Setting” .

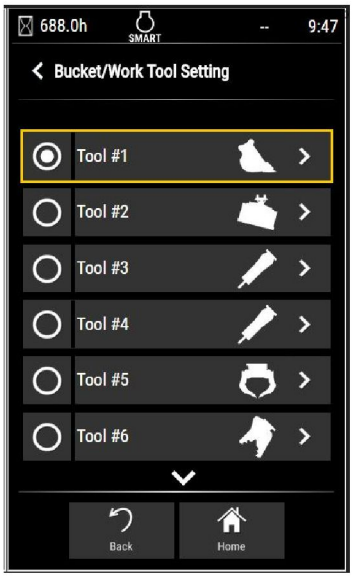

Illustration 423 g06220034

Select the desired tool.

Reference: For complete Bucket/Work Tool settings, refer to M0109053, “Next Generation Hydraulic Excavator Monitoring System Supplement”.

Electronic OMM

The Electronic OMM screen allows the operator to view the Operation and Maintenance Manual (OMM) for the machine.

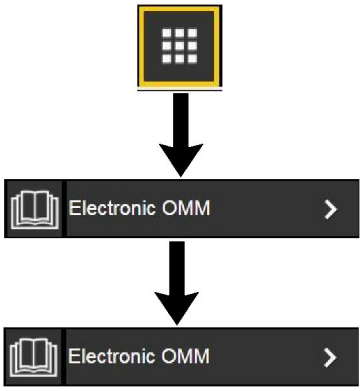

Illustration 424 g06261340

From the main screen, press the application menu button. In the Application menu, select “Setting” . Next, select “Information” and then “Electronic OMM” .

Note: Contact your Cat Dealer for information to update the electronic OMM.

Function List Screen

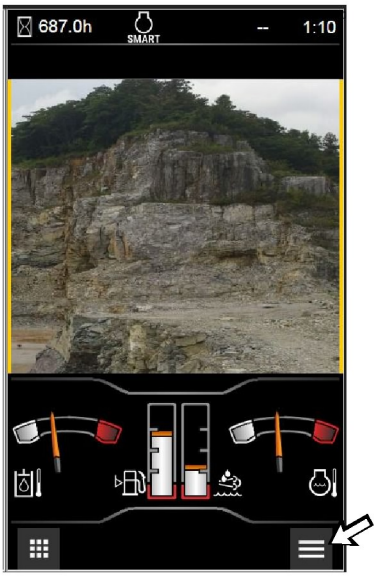

Illustration 425 g06213511

Press the Function List icon to access the Function List screen.

The Function List screen allows the user to turn on or off the available functions on the machine. Tap or select with the jog dial the item to turn on or off.

The Function list menu may differ depending on the machine configuration or software version.

Reference: For complete function list information, refer to M0109053, “Next Generation Hydraulic Excavator Monitoring System Supplement”.

i07046279

Fuel Transfer Pump (Refueling)
(If Equipped)

SMCS Code: 1256

Use the following procedure to pump fuel and store the hose.

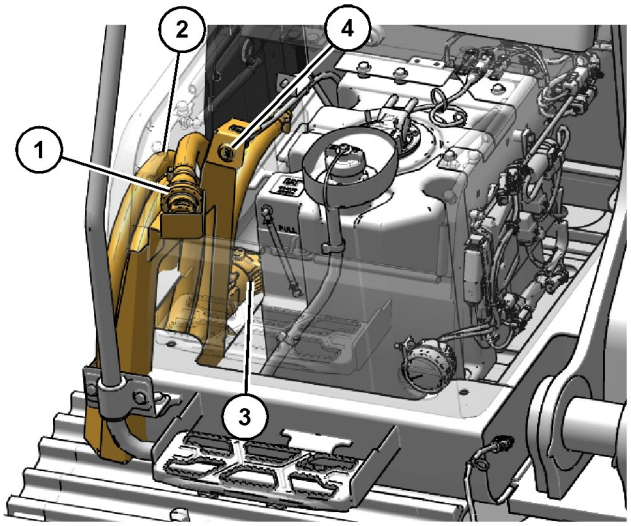

Illustration 426 g06208102

(1) Suction valve
(2) Suction hose
(3) Electric refueling pump
(4) ON/OFF switch

ON/OFF Switch – Push the ON/OFF switch to activate or deactivate the fuel transfer pump. A red indicator on the switch will illuminate when the fuel transfer pump is activated.

If one of the following conditions occur, the fuel transfer pump will not activate and/or stop operating:

- Battery disconnect switch is in the OFF position
- Engine is operating
- Engine start switch is moved to the START position.
- Engine start switch is in the OFF position
- Hydraulic lockout control is not in the LOCKED position
- Fuel tank level is full
- Fuel is not detected at the suction valve.
- 30 seconds following a detection of no fuel at the suction valve.

Use the following procedure to pump fuel and store the hose.

1. Park the machine on a level surface. Move the hydraulic lockout control to the LOCKED position. Stop the engine
2. Turn the engine start switch to the ON position without starting the engine.
3. Remove the fuel tank cap from the fuel tank.
4. Open the access that is on the right side of the machine.

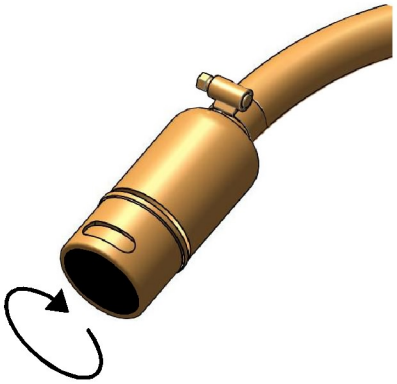

Illustration 427 g06180748

Suction valve (1) is at the end of hose (2).

Turn the end of the suction valve clockwise to open the valve

5. Uncoil the hose and turn the end of the suction valve clockwise to open the suction valve.
6. Properly insert the end of the suction valve into a container of fuel.
7. Push switch (4) to activate the fuel transfer pump and supply the fuel to the tank. A red indicator on the switch will illuminate when the fuel transfer pump is activated.

   When the fuel tank is full, the fuel transfer pump will automatically stop.

   When the fuel container is empty, push the switch again to stop refueling. If additional fuel is needed, wait 30 seconds and return to step 6.

Note: The red indicator on the switch will no longer illuminate when the fuel transfer pump has stopped refueling.

Note: The fuel transfer pump will not activate for 30 seconds following a detection of no fuel at the suction valve.

8. Push the switch at any time to deactivate the fuel transfer pump.

Note: The red indicator on the switch will no longer illuminate when the fuel transfer pump has stopped refueling.

9. Drain excess fuel from the hose and turn the end of the suction valve counter-clockwise to close the suction valve.

10. Wind the hose and store in the hose container.

NOTICE
To prevent hose damage, do not coil the hose in a tight radius.

11. Close the access door.

12. Install the fuel tank cap onto the fuel tank.

13. Turn the engine start switch to the OFF position.

i07092848

Radio

SMCS Code: 7338

The radio is integrated into the monitoring system. All the radio controls are adjusted using the monitor. The actual radio is mounted in the right rear console behind the operator seat.

Illustration 428 g06213193

(1) Jog dial
(2) Home button
(3) Radio button

The audio menu can be directly accessed by pressing radio button (3) on the right side switch panel. Input selections can be made using jog dial (1) or using the monitor touch screen. Home button (2) can be used to return to the main screen.

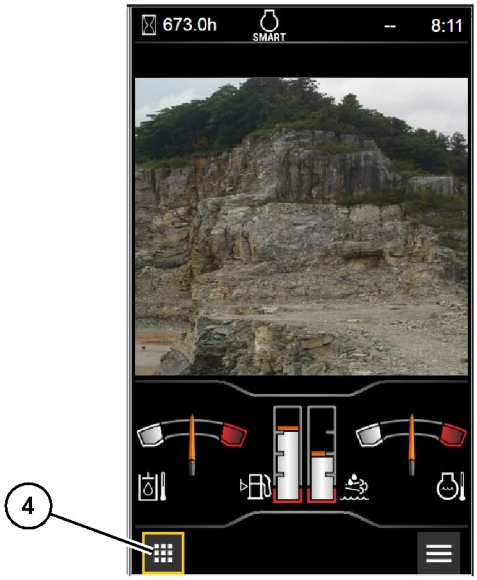

Illustration 429 g06213076

Press radio button (3) to go directly to the radio screen. To navigate to the radio screen from the main screen, press application menu button (4).

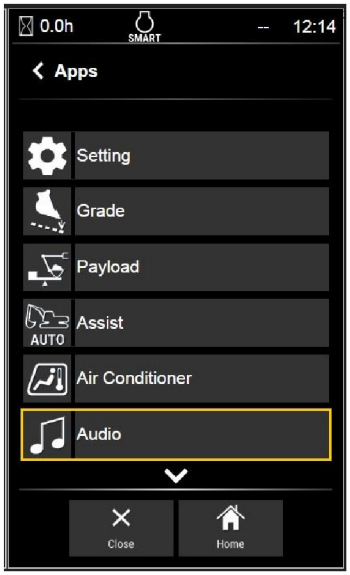

Illustration 430 g06213198

Use jog dial (1) to highlight “Audio” and then press the jog dial downward to select the entry. You may also access the screen by simply touching the “Audio” box on the touch screen.

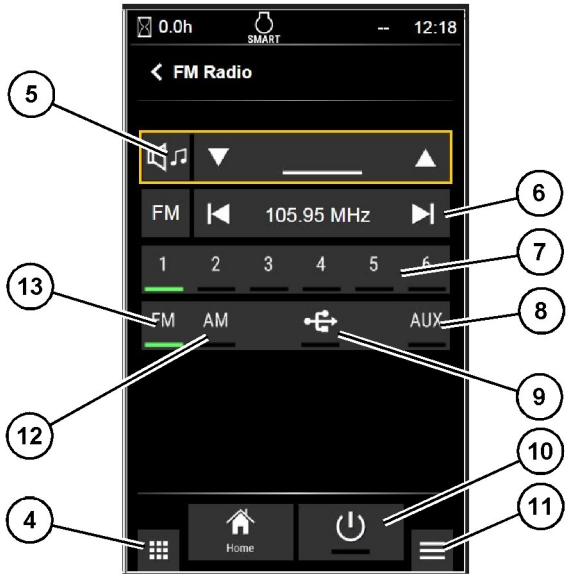

Illustration 431 g06213200

Radio screen

(4) Application menu button
(5) Volume control
(6) Tuner
(7) Preset stations
(8) Auxiliary button
(9) USB button
(10) Power button
(11) Radio Function List menu
(12) AM button
(13) FM button

Application menu button (4) – Use this button to return to the application menu.

Volume control (5) – The volume control is used to raise or lower the audio volume.

Tuner (6) – The tuner is used to tune the radio to the desired station.

Preset stations (7) – The preset stations store favorite radio stations for the operator. To set a station, tune to the desired station. Press and hold the preset number you want to assign to that station. Once a beep is heard, release the button. The indicator light for the active preset station will illuminate.

Auxiliary button (8) – When a device is plugged into the auxiliary port, press the auxiliary button to connect the device to the radio. The indicator light will illuminate when this mode is active.

USB button (9) – When a device is plugged into the USB port, press the USB button to connect the device to the radio. The indicator light will illuminate when this mode is active.

Power button (10) – Pressing this button turns the radio on and off. The indicator light on the monitor and on button (3) will illuminate when the power is on.

Radio function list menu button (11) – Pressing this button leads to the radio function list menu.

AM button (12) – Press this button to access AM radio. The indicator light will illuminate when this mode is active.

FM button (13) – Press this button to access FM radio. The indicator light will illuminate when this mode is active.

Radio Function List

To access the radio function list, press the function list button (11) in the lower right corner of the radio screen.

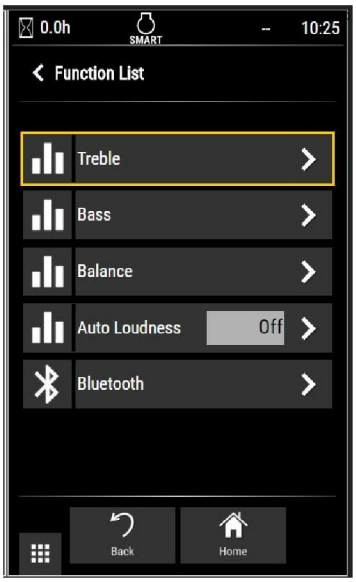

Illustration 432 g06223378

The function list menu consists of the following items:

Treble – Allows the user to adjust the treble.

Bass – Allows the user to adjust the bass.

Balance – Allows the user to adjust the balance between speakers.

Auto Loudness – When on, this feature automatically adjust treble and bass levels when reducing the volume setting. This effect allows the user to hear more clearly at a lower volume.

Bluetooth – Allows the user to pair a phone, view paired devices, and edit device names.

Refer to Operation and Maintenance Manual, Monitoring System - Bluetooth for information on the Bluetooth screen.

Selection Method

All settings can be made using the touch screen or by using the jog dial. The method depends on the preference of the operator. When using the touch screen, simply touch the icon you want to select. When using the jog dial, rotate the dial to switch to different selections within the screen. Press the jog dial downward to choose a selection.

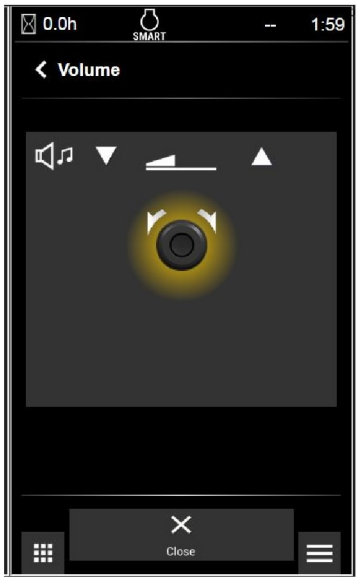

Illustration 433 g06213233

When using the jog dial to set the volume or tuner, rotate the dial clockwise to increase and counter-clockwise to decrease. Press downward on the dial to enter the desired setting.

Radio Operation

1. To operate the system, press power button (10).
2. Select between the AM button for AM stations or select the FM button for FM stations.
3. Use tuner (6) to adjust to the desired station. If presets stations (7) are set, press the desired preset station.
4. Use volume control (5) to adjust the volume.
5. When the machine is in operation turn down the volume of the radio.

USB/AUX Operation

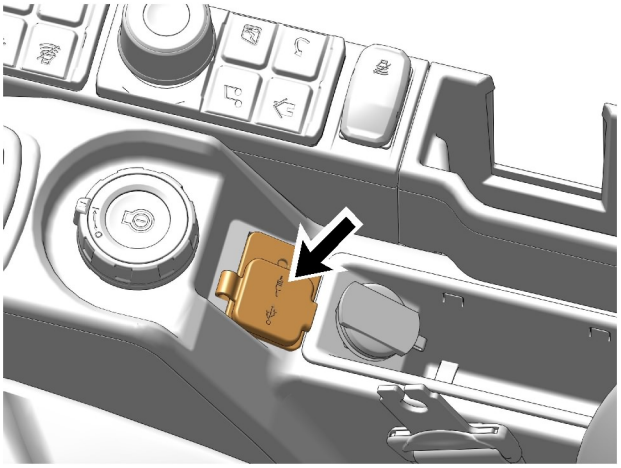

Illustration 434 g06213245

1. To play music from a device such as an MP3 player or a phone, connect the device using an auxiliary cable or a USB cable. Depending on the cable being used, plug the cable into the appropriate port on the console.
2. Select either USB or AUX depending on which type of cable was used. Play the music from the device. The music should be playing over the radio speakers if properly connected. Adjust the volume as necessary.

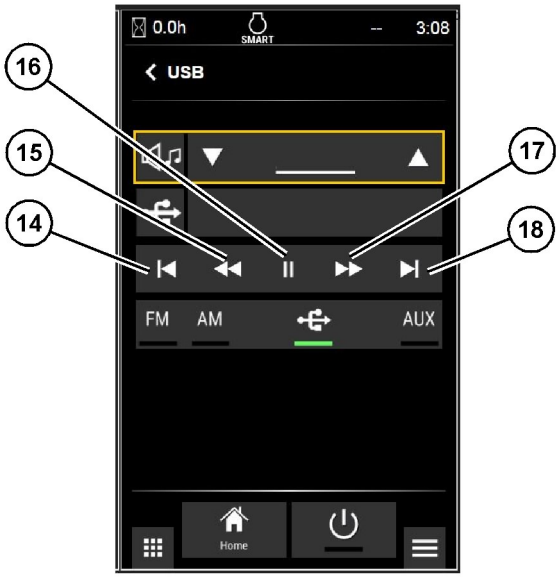

Illustration 435 g06213254

Note: If USB is selected, extra controls appear on the screen for playing music. They include the following:

14 – Skip to the beginning of the track

15 – Rewind the track

16 – Pause/Play the track

17 – Fast forward the track

18 – Skip to the end of the track

i08031142

Air Conditioning and Heating Control

SMCS Code: 7304; 7320; 7337

Consult with your Cat dealer for periodic maintenance of the heating and air conditioning system.

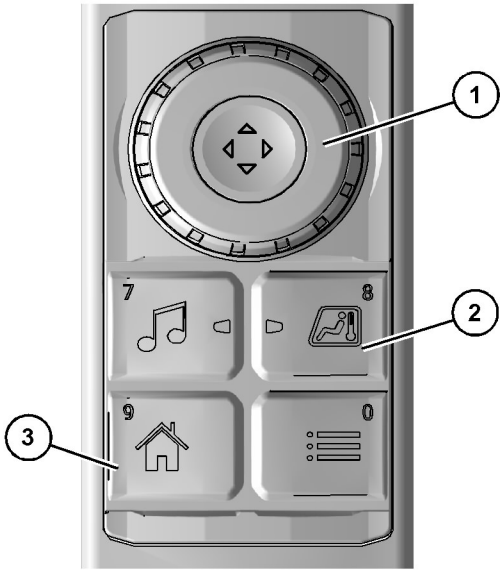

Illustration 436 g06178710

(1) Jog dial
(2) Heating and air conditioning button
(3) Home button

Air conditioning and heating functions are controlled through the monitor. The heating and cooling menu can be directly accessed by pressing button (2) on the right side switch panel. Input selections can be made using jog dial (1) or using the monitor touch screen. Home button (3) can be used to return to the main screen.

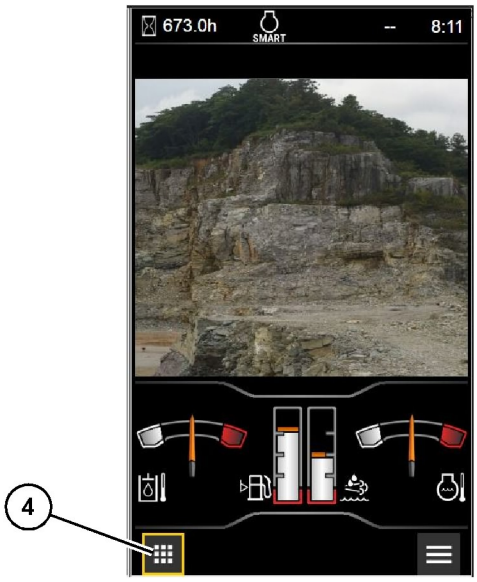

Illustration 437 g06213076

Press the Air Conditioning and Heating button (2) to go directly to the air conditioner screen. To navigate to the air conditioner screen from the main screen, press application menu button (4).

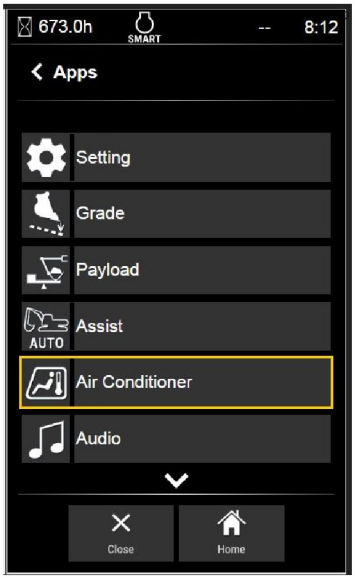

Illustration 438 g06213088

Use jog dial (1) to highlight “Air Conditioner” and then press the jog dial downward to select the entry. You may also access the screen by simply touching the “Air Conditioner” box on the touch screen.

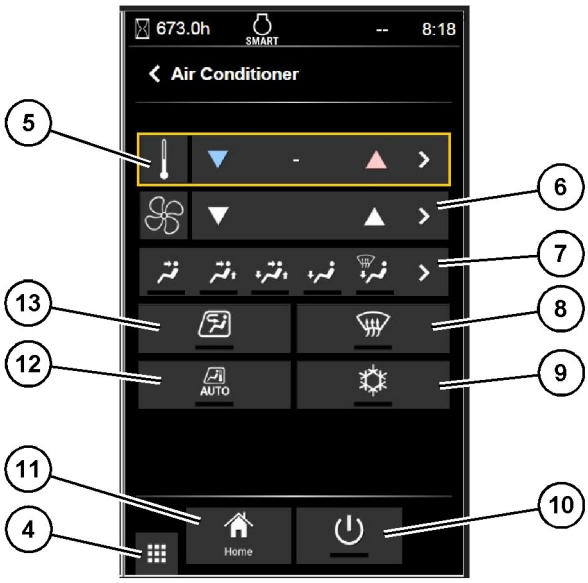

Illustration 439 g06213092

Air conditioner screen

(4) Application menu button
(5) Temperature control
(6) Fan blower speed control
(7) Air outlet settings
(8) Defroster
(9) Compressor ON/OFF
(10) Power
(11) Home button
(12) Auto
(13) Recirculation

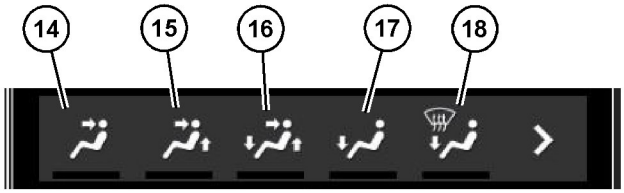

Illustration 440 g06213104

(14) Front vents
(15) Front and rear vents
(16) Front, foot, and rear vents
(17) Foot vents
(18) Defrost and foot mode

Application menu button (4) – Use this button to return to the application menu.

Temperature control (5) – The temperature control is used to raise or lower the desired temperature.

Fan blower speed control (6) – The blower control is used to increase or decrease the desired blower speed.

Air outlet settings (7) – The desired air outlet setting can be chosen from this panel. The indicator light will illuminate to show the active setting.

Defroster (8) – Pressing this button activates and deactivates the defroster. Use the defroster to remove steam and frost from the windows. The indicator light will illuminate when this mode is active.

Compressor ON/OFF (9) – Pressing this button activates and deactivates the air conditioner. The indicator light will illuminate when this mode is active.

Power (10) – Pressing this button turns the heating and cooling system on and off. Push and hold the power button for 3 seconds to turn OFF the HVAC system. The indicator light on the monitor and on button (2) will turn green when power is on.

Home button (11) – Use this button to return to the main screen.

Auto (12) – Select this option to hold the system at the desired temperature. The system will modulate to keep the cab at the temperature that the system is set to. The indicator light will illuminate when this mode is active.

Recirculation (13) – This option recirculates air from the cab instead of pulling air from the outside. This mode is more efficient because the system is recycling conditioned air from the cab. However, no fresh air is coming into the cab when in this mode. The indicator light will illuminate when this mode is active.

Front vents (14) – In this mode, air will only circulate from the front vents.

Front and rear vents (15) – In this mode, air will circulate from the front vents and rear vents.

Front, foot, and rear vents (16) – In this mode, air will circulate from the front vents, rear vents, and foot vents.

Foot vents (17) – In this mode, air will only circulate from the foot vents.

Defrost and foot mode (18) – In defrost mode, air will circulate from the defrost vents and foot vents.

Selection Method

All settings can be made using the touch screen or by using the jog dial. The method depends on the preference of the operator. When using the touch screen, simply touch the icon you want to select. When using the jog dial, rotate the dial to switch to different selections within the screen. Press the jog dial downward to choose a selection.

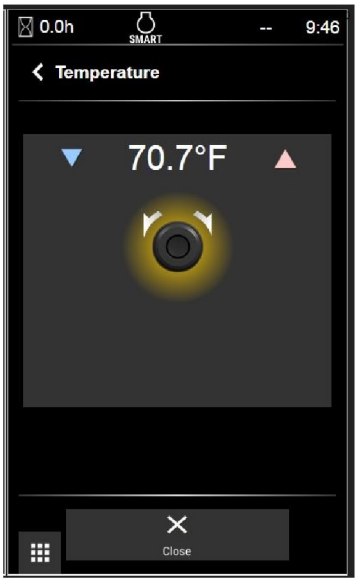

Illustration 441 g06213141

When using the jog dial to set the temperature or blower speed, rotate the dial clockwise to increase and counter-clockwise to decrease. Press downward on the dial to enter the desired setting.

Operation

1. To operate the system, press power button (10).
2. Use temperature control (5) to adjust to the desired temperature.
3. Select the desired mode and outlet vents.
4. Use fan blower speed control (6) to adjust the blower. If the system is in “Auto” mode, the blower fan speed and air outlet setting will automatically be adjusted. But recirculation air intake is not changed automatically.

Note: In cold ambient temperature condition, fan speed is stopped or restricted depend on coolant temperature.

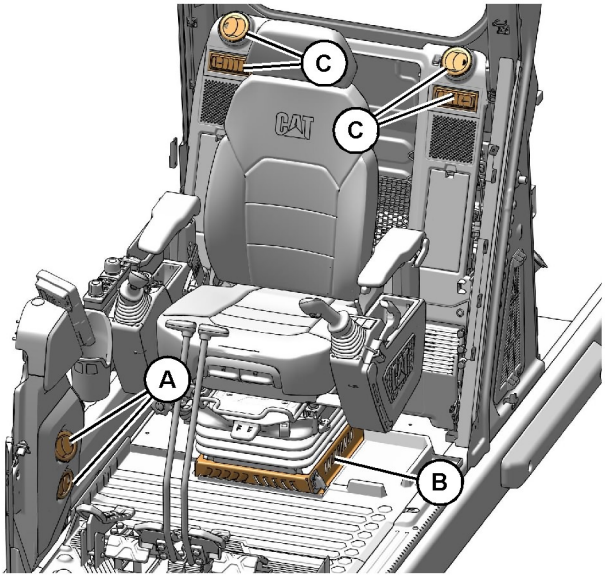

Illustration 442 g06178705

(A) Defrost vent (front window)
(B) Foot air vents
(C) Rear air vents

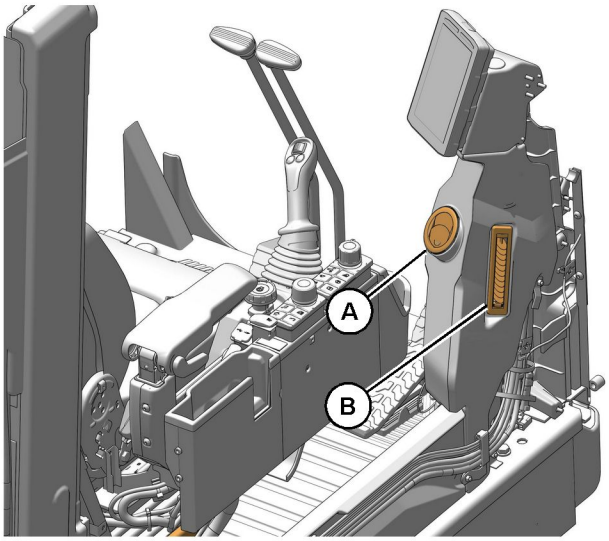

Illustration 443 g06287632

(A) Front vent
(B) Defrost vent (RH window)

5. Redirect the louvers for air outlets (A) and (C) by hand to the desired direction. The louvers for air outlet (B) cannot be redirected.

i07311301

Mirror

SMCS Code: 7319

WARNING

Adjust all mirrors as specified in the Operation and Maintenance Manual. Failure to heed this warning can lead to personal injury or death.

Note: Your machine may not be equipped with all the mirrors that are described in this topic.

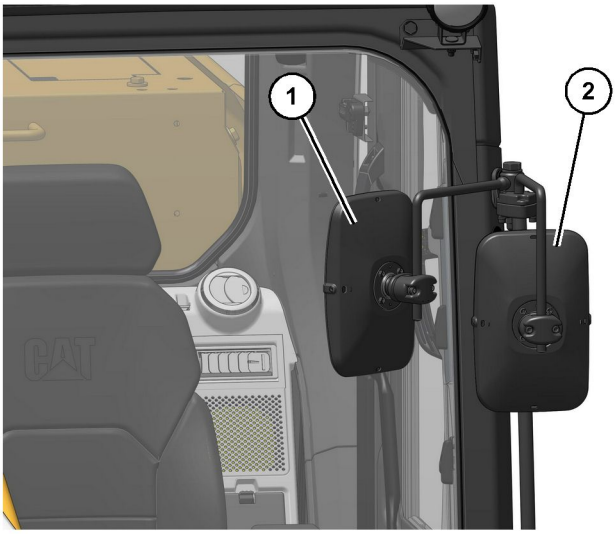

Illustration 444 g06220616

(1) Right Side View Mirror on the Cab
(2) Left Side View Mirror on the Cab

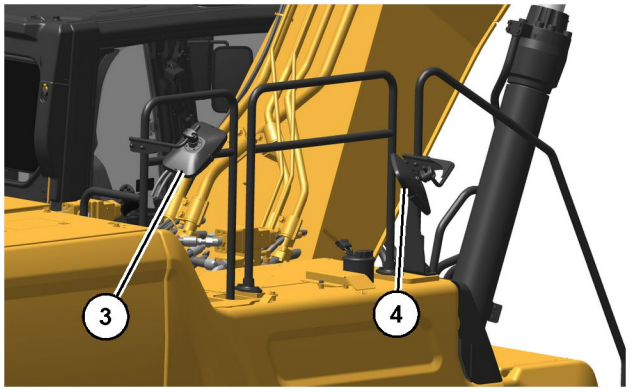

Illustration 445 g06279207

(3) Rear tank mirror
(4) Front tank mirror

Mirrors provide more visibility around your machine. Make sure that the mirrors are in proper working condition and that the mirrors are clean. Adjust all mirrors at the beginning of each work period and adjust the mirrors when you change operators.

Modified machines or machines that have more equipment or attachments may influence your visibility.

Mirror Adjustment

- Park the machine on a level surface.
- Lower the work tool to the ground.
- Move the hydraulic lockout control to the LOCKED position. For further details on this procedure, refer to Operation and Maintenance Manual, “Operator Controls”.
- Stop the engine.
- Adjust rear view mirrors to provide visibility behind the machine at a maximum distance of 30 m (98 ft) from the rear corners of the machine.

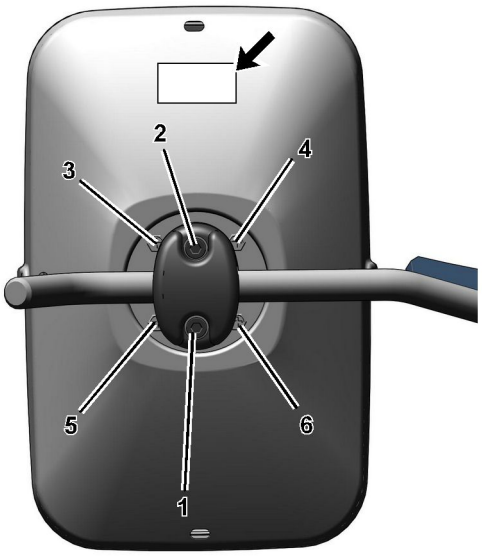

Illustration 446 g06220634

Tightening sequence

After adjustment of the mirror angle, make sure that the CAT logo is at the top.

It may be necessary to tighten the mirror mounting bolts periodically. If the bolts are loose, tighten the bolts in the sequence shown in Illustration 446 . Tighten bolts (1) and (2) to 11 ± 2 N·m (8.1 ± 1.5 lb ft).

Tighten the bolts (3) through (6) to 2 ± 0.4 N·m (1.5 ± 0.3 lb ft).

Right Side View Mirror on the Cab (1)

Illustration 447 g06223277

If equipped, adjust the right side view mirror on the cab (1) so the front of the right track can be seen from the operator seat. A view of at least 1 m (3.3 ft) from the right front of the machine should be seen from the operator seat.

Left Side View Mirror on the Cab (2)

Illustration 448 g06223279

If equipped, adjust the left side view mirror on the cab (4) so the left side of the cab, access door, and rear of left track can be seen from the operator seat. A view of at least 1 m (3.3 ft) from the side of the machine should be seen from the operator seat. Additionally, provide as much visibility to the rear as possible.

Rear Tank Mirror (3)

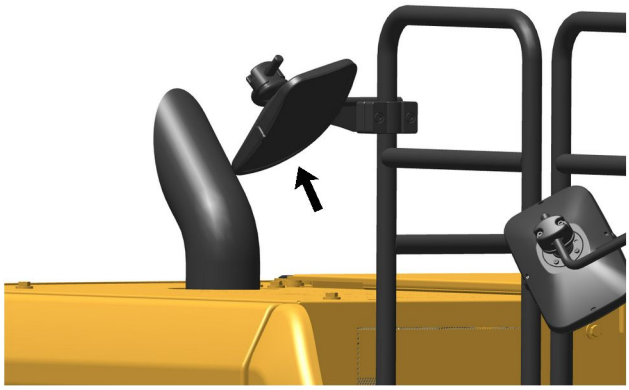

Illustration 449 g06279214

If equipped adjust the rear mirror on the tank so the right side of fuel tank and the hydraulic tank can be seen from the operator seat. A view of at least 1 m (3.3 ft) from the side of the machine should be seen from the operator seat.

Front Tank Mirror (4)

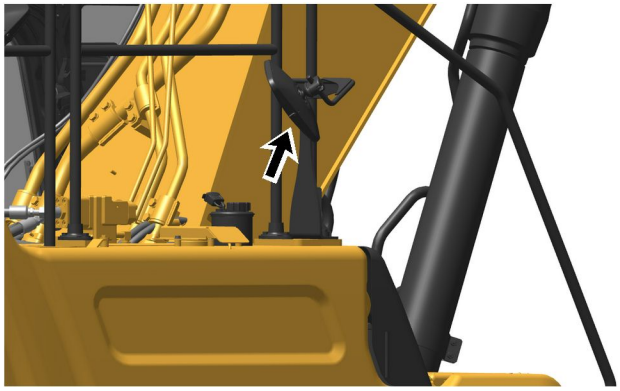

Illustration 450 g06279217

If equipped adjust the front mirror on the tank (2) so the right access door and the counterweight can be seen from the operator seat. A view of at least 1 m (3.3 ft) from the side of the machine should be seen from the operator seat. Additionally, provide as much visibility to the rear as possible.

i07692597

Camera

SMCS Code: 7347; 7348

Rear View Camera

Illustration 451 g06279174

The rear view camera system consists of a camera that is located in the middle of the top of the counterweight.

Note: The rear view camera system has been set up by the factory or by a Cat dealer to provide views which comply with specified guidelines. Consult your Cat dealer before any adjustments are made to the system.

For more information refer to Operation and Maintenance Manual, “Monitoring System”.

Right Side View Camera (If Equipped)

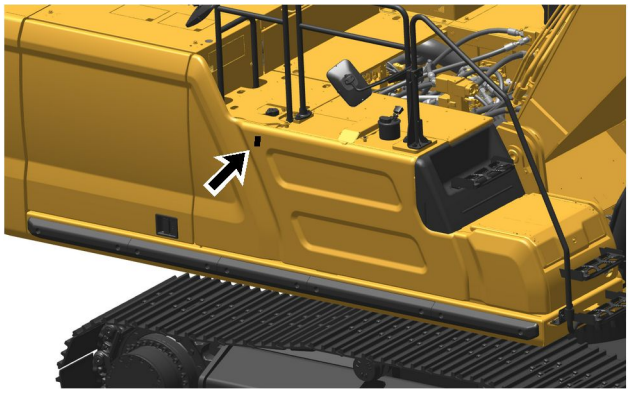

Illustration 452 g06279183

The side view camera system consists of a camera mounted on the panel next to the pump compartment.

Note: The side view camera system has been set up by the factory or by a Cat dealer to provide views which comply with specified machine side views. Consult your Cat dealer before any adjustments are made to the system.

For more information refer to Operation and Maintenance Manual, “Monitoring System”.

360 Visibility (If Equipped)

Note: 10 inch monitor is required for 360 Visibility.

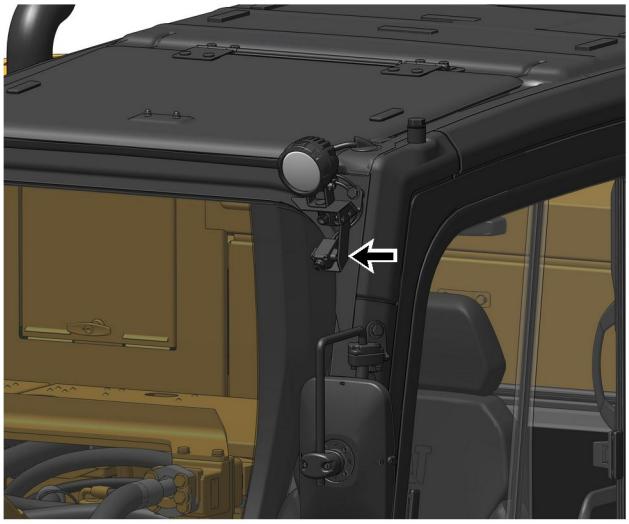

Illustration 453 g06263449

Front camera

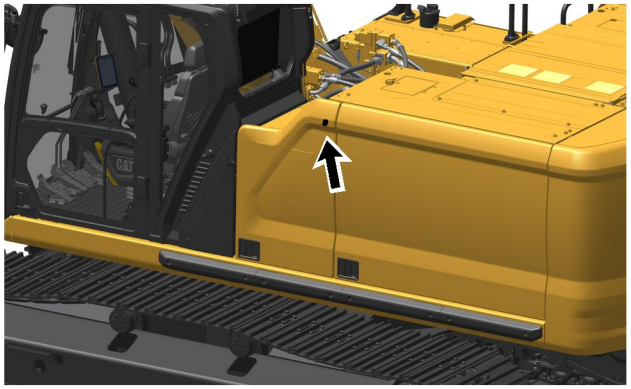

Illustration 454 g06279184

Left side camera

The 360 visibility system consists of a front camera and a left side camera in addition to the right side and rear view cameras.

If equipped with the optional side and front cameras, the 360 visibility feature can be toggled on and off to enable or disable the 360 degree visibility view in the monitor.

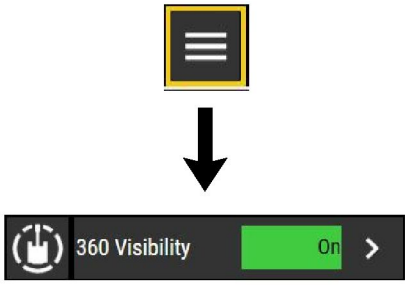

Illustration 455 g06263096

Note: The 360 visibility system has been set up by the factory or by a Cat dealer to provide views which comply with specified machine side views. Consult your Cat dealer before any adjustments are made to the system.

For more information refer to Operation and Maintenance Manual, “Monitoring System”.

i07427990

Window (Front)

SMCS Code: 7310-FR

To provide full ventilation inside the cab, the upper window and the lower window can be fully opened.

WARNING

When opening or closing the windows, be extra careful to prevent any personal injury. The hydraulic lockout control must be in the LOCKED position in order to prevent any possibility of sudden movement of the machine due to inadvertent contact with the hydraulic control(s).

Do not change the position of the window until the following items have been done:

- Park the machine on a level surface.
- Lower the work tool to the ground.
- Move the hydraulic lockout control to the LOCKED position.
- Stop the engine.

Perform Step 1 through Step 3 to open the upper window.

Note: If equipped, the Cat Grade Control monitor may interfere with the window when opening. Ensure that the monitor is adjusted out of the way before opening the window.

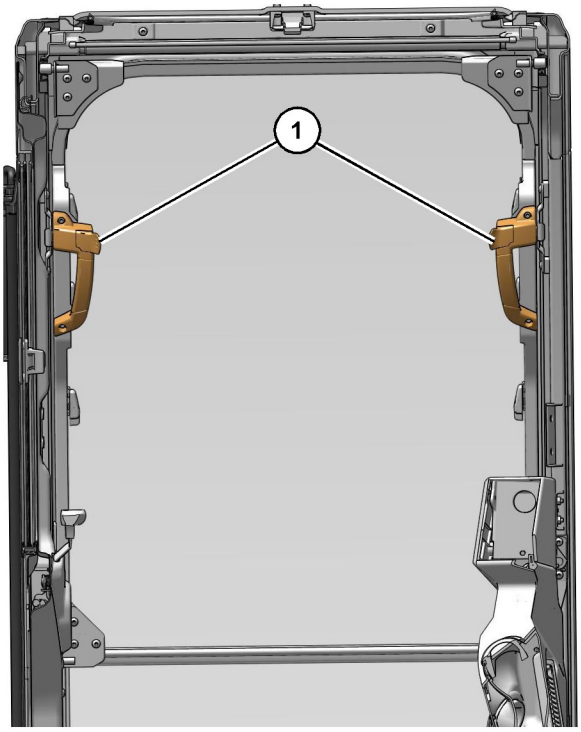

Illustration 456 g06185052

(1) Release lever

1. Release the auto-lock latches by pressing release levers (1) on the window handles.
2. Holding both handles on the window frame, pull the window upward.
3. Hold both grips that are provided on the window frame and move the window into the storage position until the auto-lock latches near the ceiling are engaged.

   Perform Steps 4 through 5 to close the upper window.

Note: If equipped, the Cat Grade Control monitor may interfere with the window when closing. Ensure that the monitor is adjusted out of the way before closing the window.

4. Release the auto-lock latches by pressing release levers (1) on the window handles.
5. Reverse Steps 1 through 3 to close the upper window.

Perform Steps 6 through 8 to open the lower window and close the lower window.

6. Raise the lower window out of the window frame.

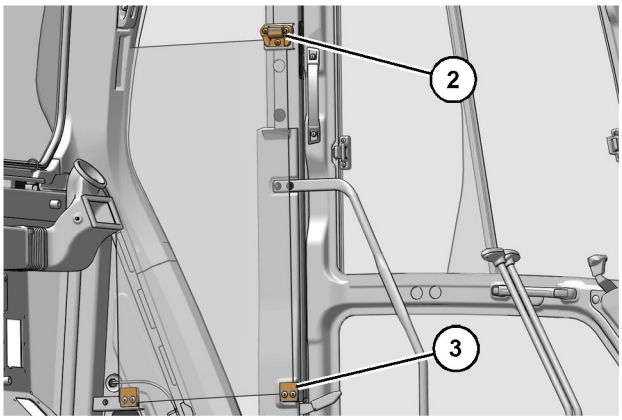

Illustration 457 g06185076

(2) Catch
(3) Brackets

7. Store the lower window in the holder that is located in the rear of the left side cab frame. To store the lower window, locate one end of the lower window into brackets (3). Secure the opposite end of the lower window with catch (2).

8. To close the lower window, reverse the procedure that is used for opening the lower window.

Note: The lower window is curved. The lower window can only be positioned one way in the holders.

i07538754

Sun Screen

SMCS Code: 7165-ZZ

WARNING

When opening or closing the windows, be extra careful to prevent any personal injury. The hydraulic lockout control must be in the LOCKED position in order to prevent any possibility of sudden movement of the machine due to inadvertent contact with the hydraulic control(s).

NOTICE

Do not change the position of the sun screen without performing the following actions:

- Park the machine on a level surface.
- Lower the work tool to the ground.
- Move the hydraulic lockout control to the LOCKED position.
- Stop the engine.

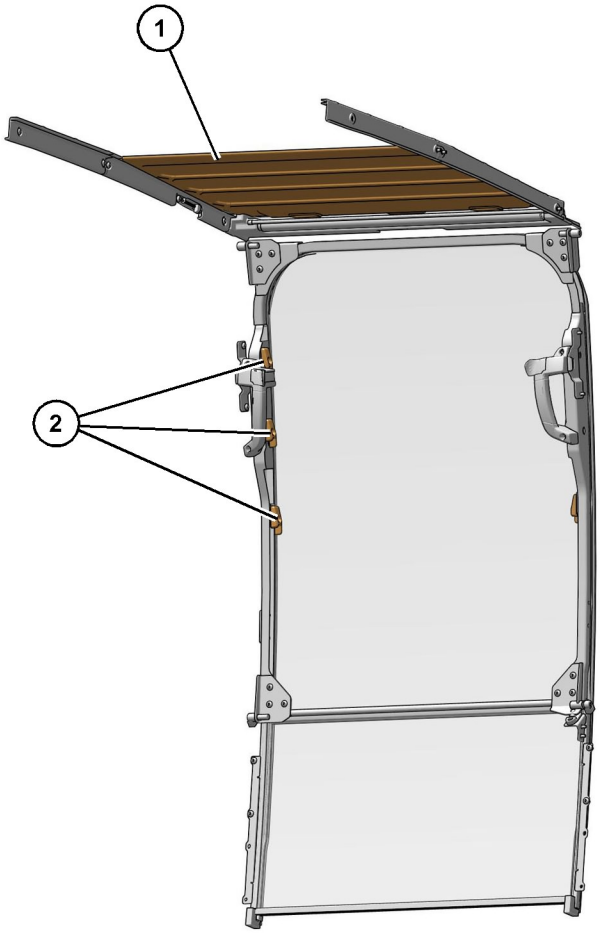

Illustration 458 g06179846

Pull sun screen (1) down from the ceiling. Hook the sun screen to the brackets (2) at both sides of the front window. The sun screen may be positioned at two different heights.

i07538807

Roof Hatch

SMCS Code: 7303

WARNING

When opening or closing the windows, be extra careful to prevent any personal injury. The hydraulic lockout control must be in the LOCKED position in order to prevent any possibility of sudden movement of the machine due to inadvertent contact with the hydraulic control(s).

NOTICE
Do not change the position of the roof hatch without performing the following actions:

- Park the machine on a level surface.
- Lower the work tool to the ground.
- Move the hydraulic lockout control to the LOCKED position.
- Stop the engine.

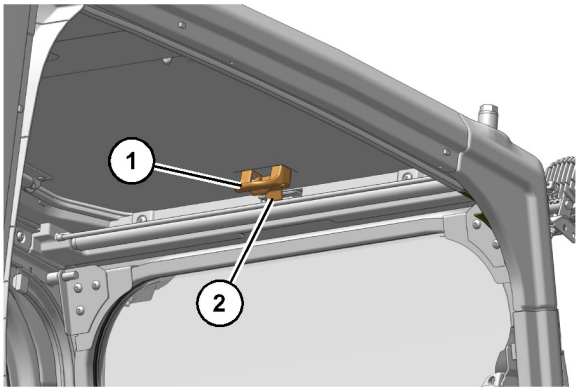

Illustration 459 g06179871

(1) Grip
(2) Lock

To open the roof hatch, release lock (2). Hold grip (1) and push the roof hatch upward.

To close the roof hatch, hold grip (1) and pull the roof hatch downward. Engage lock (2) securely.

NOTICE
Do not stand or walk on the hatch or the roof of the cab. Serious damage may occur.

i06949447

Cab Door

SMCS Code: 7308

Illustration 460 g06180275

To open the cab door from the outside of the cab, pull outward on the door handle.

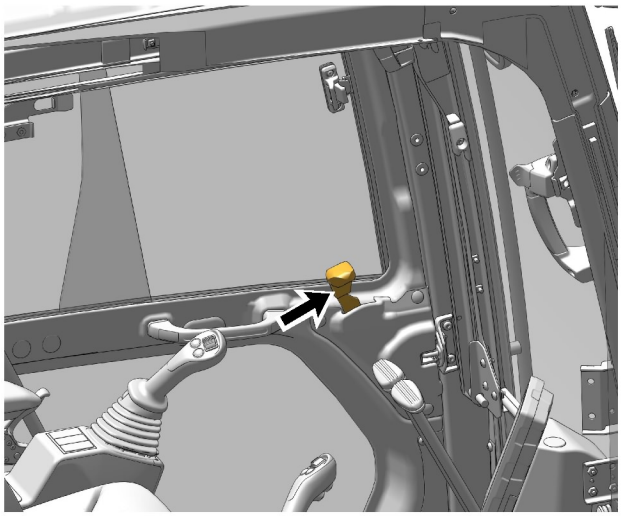

Illustration 461 g06179959

To open the cab door while inside the cab, push forward on the lever for the cab door latch.

For additional ventilation, open the cab door all the way to engage the catch on the exterior wall of the cab.

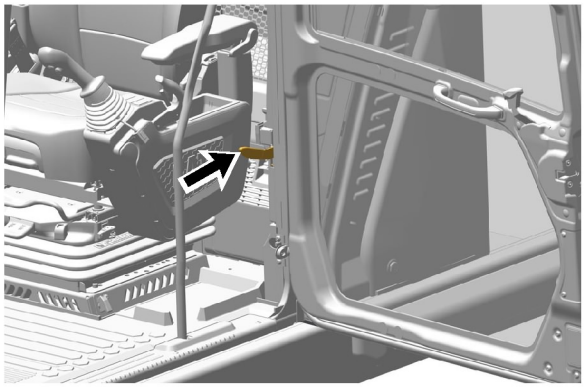

Illustration 462 g06180267

To release the cab door from the catch, pull downward on the cab door release lever.

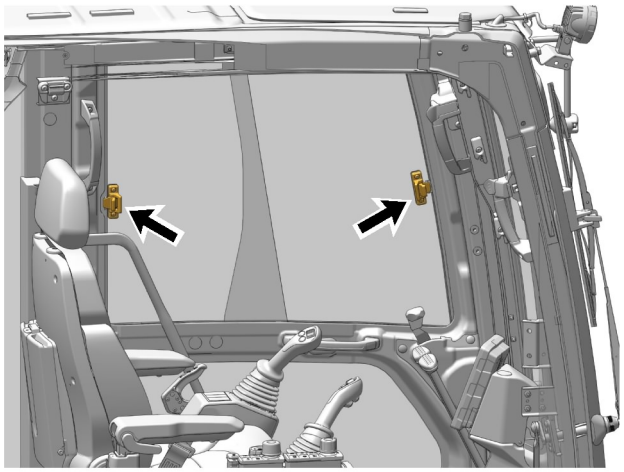

Illustration 463 g06179957

To open a window, release the window latch, and then slide the window to the desired position.

i06946782

Travel Control
(Straight Travel Pedal (If Equipped))

SMCS Code: 5462

WARNING

With certain attachment combinations, the third pedal can have different functions. Always check for third pedal function before using the third pedal. Improper operation of the third pedal could result in serious injury or death.

Illustration 464 g06178249

Position for normal travel

(A) Rear of machine
(B) Final drive
(C) Idler

When you travel, make sure that final drive sprockets (B) are under the rear of the machine.

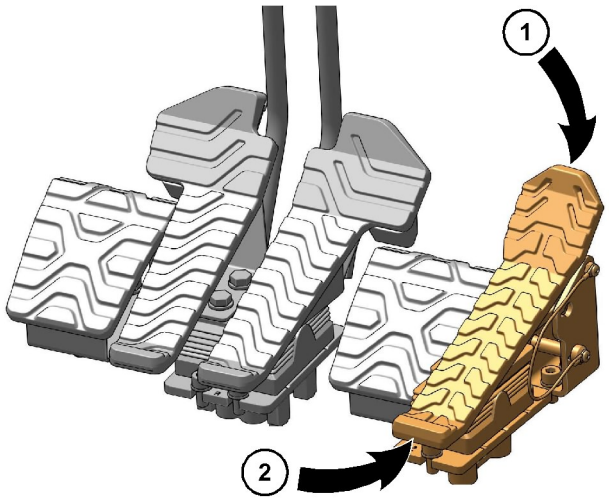

Illustration 465 g06178758

(1) Forward Travel
(2) Reverse Travel

The third pedal is to the right of the right travel pedal. The third pedal controls the forward and backward movement of the machine.

Note: If the third pedal is depressed and a travel pedal or a travel lever is operated, the machine will turn accordingly.

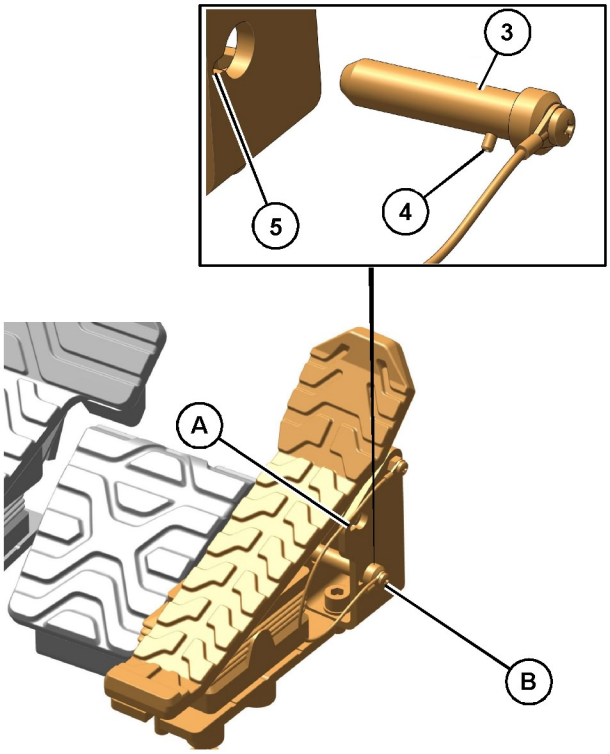

Illustration 466 g06178798

(3) Lock pin
(4) Pin
(5) Notch
(A) LOCKED position
(B) UNLOCKED position

When the machine is not operated with the third pedal, install lock pin (3) at the LOCKED position to prevent accidental operation.

Note: To prevent lock pin (3) from being pulled out, insert pin (4) through notch (5) and turn lock pin (3) counterclockwise by 1/4 turn.

i08034255

Joystick Controls

SMCS Code: 5705

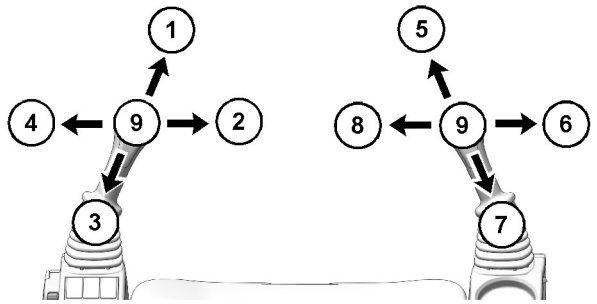

Illustration 467 g06180324

(1) STICK OUT
(2) SWING RIGHT
(3) STICK IN
(4) SWING LEFT
(5) BOOM LOWER
(6) BUCKET DUMP
(7) BOOM RAISE
(8) BUCKET CLOSE
(9) HOLD

WARNING

The joystick and controls on the joystick can be configured with different functions. Always make sure to check the joystick configuration on the monitor before using the machine to avoid unexpected machine movement. These unexpected machine movements could cause a hazard resulting in serious injury or death.

WARNING

The Fine Swing Control delays the engagement of the swing parking brake.

If the machine is operating on a slope with the Fine Swing Control in the ON position, the swing motion may become uncontrollable which could result in property damage, personal injury or death.

Turn the Fine Swing Control to the OFF position when the machine is operating on a slope.

When you release the joysticks from any position, the joysticks will return to HOLD position (9). Movement of the upper structure will stop unless the fine swing control (if equipped) is ON. When the fine swing control is ON, the swing parking brake will not activate until 6.5 seconds after the joystick control for the swing function returns to the HOLD position.

Two functions may be performed at the same time by moving a joystick diagonally.

The machine control pattern is initially set at the factory to the SAE system, as shown. The pattern on the left pertains to the left joystick and the pattern on the right pertains to the right joystick.

The machine control pattern can be varied. Refer to Operation and Maintenance Manual, “Joystick Controls Alternate Patterns” for more information.

Manual Low Idle – Activate the manual low idle to reduce the engine speed to approximately 1000 rpm. Pressing the switch again will allow the engine speed to return to the original setting of the engine speed dial.

The manual low idle allows the operator to reduce the rpm without touching the engine speed dial. Manual low idle is useful when the operator wants to reduce the engine speed to talk to someone or while the operator is waiting for a truck.

Vertical Slider Joystick Controls

Illustration 468 g06224200

Vertical Slider Joystick Controls

(1) Left joystick switch 3
(2) Left joystick switch 4
(3) Left joystick switch 1
(4) Left joystick switch 2
(5) Left joystick thumbwheel
(6) Right joystick thumbwheel
(7) Right joystick switch 2
(8) Right joystick switch 1
(9) Right joystick switch 4
(10) Right joystick switch 3

Table 23

Joystick Configurations					
Switch Location	Machine Configuration				Joystick With Tool Control Sliders
	Grade	Grade Assist	Grade Payload	Grade Assist Payload	
1[1]	Hammer	Hammer	Hammer	Hammer	Hammer
2	Standby / Weigh	Standby / Weigh	Standby / Weigh	Standby / Weigh	Configurable
3	Horn	Horn	Horn	Horn	Horn
4	Store	Store	Store	Store	Configurable
5[1]	Work Tool Rotation	Work Tool Rotation	Work Tool Rotation	Work Tool Rotation	Work Tool Rotation
6[1]	Work Tool Open / Close	Work Tool Open / Close	Work Tool Open / Close	Work Tool Open / Close	Work Tool Open / Close
7	Bucket Recall and Store	Bucket Recall and Store	Bucket Recall and Store	Bucket Recall and Store	Configurable
8	Bench Mark	Bench Mark	Bench Mark	Bench Mark	Configurable
9	Grade and Bucket Assist Activation	Grade and Bucket Assist Activation	Grade and Bucket Assist Activation	Grade and Bucket Assist Activation	Configurable
10	Laser and Touch Point	Laser and Touch Point	Laser and Touch Point	Laser and Touch Point	Configurable

[1] Button is configurable on machines without tool control.

Note: The following functions can be assigned to the configurable buttons: radio mute, one-touch low idle, work tool select, and HVAC.

Dual Slider Joystick Controls (If Equipped)

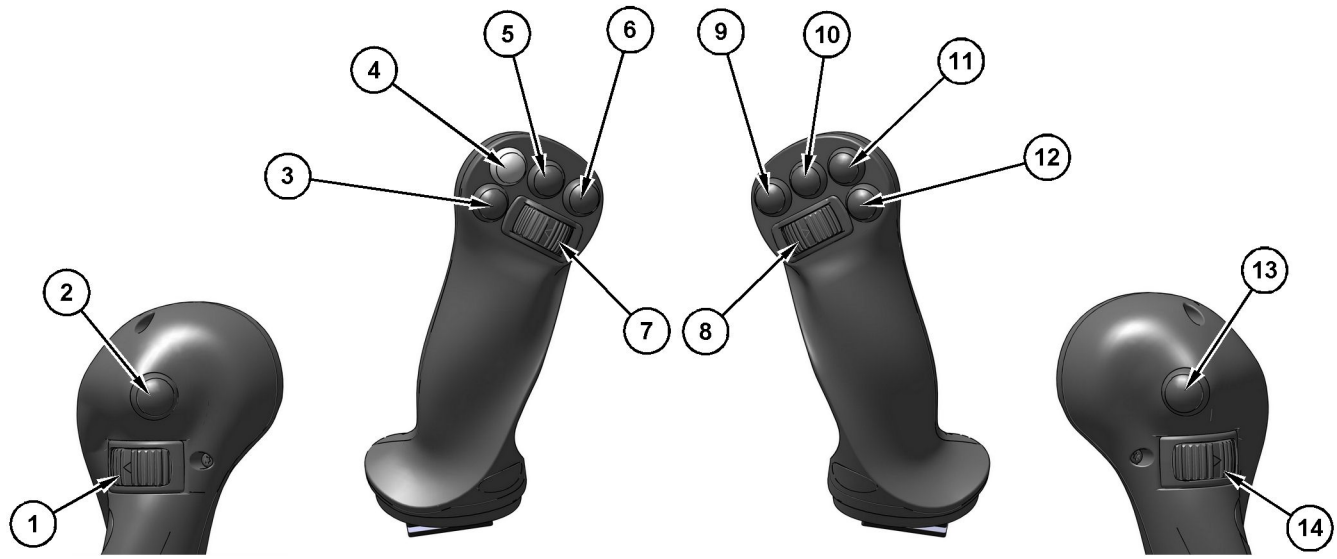

Illustration 469 g06516923

(1) Left Thumbwheel 2
(2) Left Switch 4
(3) Left Switch 2
(4) Left Switch 1 (Horn)
(5) Left Switch 5
(6) Left Switch 3
(7) Left Thumbwheel 1
(8) Right Thumbwheel 1
(9) Right Switch 3
(10) Right Switch 5
(11) Right Switch 1
(12) Right Switch 2
(13) Right Switch 4
(14) Right Thumbwheel 2

Table 24

Default Functions		
Switch	**Function**	**Category**
Left Thumbwheel 2 (1)	-	Configurable
Left Switch 4 (2)	Standby/Weigh	Payload
Left Switch 2 (3)	Store	
Left Switch 1 (4)	Horn	Mandatory
Left Switch 5 (5)	-	Configurable
Left Switch 3 (6)	One-Way ATT	TCS
Left Thumbwheel 1 (7)	Mid-Pressure ATT	
Right Thumbwheel 1 (8)	High-Pressure ATT	
Right Switch 3 (9)	Laser and Tough Point	Grade

(continued)

(Table 24, contd)

Default Functions		
Switch	**Function**	**Category**
Left Switch 5 (10)	-	Configurable
Left Switch 1 (11)	Bench Mark	Grade

(continued)

(Table 24, contd)

Default Functions		
Switch	**Function**	**Category**
Left Switch 2 (12)	Bucket Recall and Store	Assist
Left Switch 4 (13)	Grade and Bucket Assist Activation	
Left Thumbwheel 2 (14)	-	Configurable

Medium Pressure (If Equipped)

Rotating Tool Control

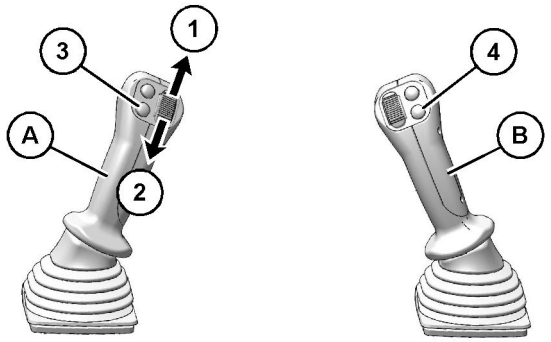

Illustration 470 g06260903

(A) Left joystick
(B) Right joystick
(1) Thumb wheel (Clockwise)
(2) Thumb wheel (Counterclockwise)
(3) Horn switch
(4) AEC switch

(1) ROTATE CLOCKWISE – Move the thumb wheel upward to rotate the work tool clockwise.

(2) ROTATE COUNTERCLOCKWISE – Move the thumb wheel downward to rotate the work tool counterclockwise.

(3) HORN – Press the horn switch on the left joystick to activate the horn.

(4) AEC SWITCH – Press the AEC switch on the right joystick to activate low engine speed. Press the switch again to activate high engine speed.

i06951419

SmartBoom Control
(If Equipped)

SMCS Code: 5461-ZS; 7332

WARNING

Personal injury or death can result from not following the proper procedures.

To avoid the possibility of injury or death, follow the established procedure.

WARNING

Activating the SmartBoom function and using the work tool joystick control while the front of the machine is elevated could result in unexpected machine motion. Unexpected machine motion could result in serious injury or death. Do not activate the SmartBoom function if the front of the machine is elevated by the front linkage.

WARNING

Do not elevate or lower the track when in the SmartBoom mode. Follow the operation procedures for the SmartBoom in the Operation and Maintenance Manual. Failure to follow these instructions can result in serious injury or death.

WARNING

Always make sure that the boom control joystick is in the NEUTRAL position before activating the SmartBoom control. Activating the SmartBoom control with the joystick out of the neutral position could resulted in unexpected machine motion which could result in serious injury or death.

WARNING

Do not select any SmartBoom mode, using the SmartBoom selector switch located on the console, while the tracks are elevated. Selecting the SmartBoom mode with the tracks elevated could result in a sudden drop of the machine which could result in serious injury or death.

WARNING

If any SmartBoom mode is active and the boom control joystick is in the BOOM DOWN position (forward) with a bucket or a work tool on the ground, pressing the disable button that is located on the front of the right hand joystick could cause a sudden boom down motion. This control function could lift the machine upward, with unexpected machine movement that could result in serious injury or death. Do not press the disable button while the SmartBoom mode is active and the boom control joystick is in the BOOM DOWN position (forward) with a bucket or a work tool on the ground.

WARNING

Do not attempt to lift the tracks of the machine by using the disable button and applying downward force with the boom lowering control while the machine is in any SmartBoom mode. Releasing the disable button will immediately return the machine to the active SmartBoom mode. This action could cause the machine to drop down abruptly which could result in serious injury or death.

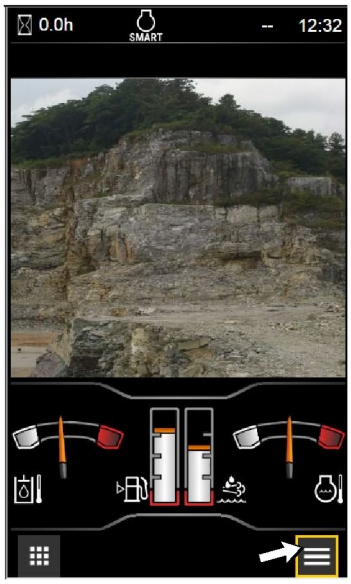

Illustration 471 g06210059

From the home screen, press the function list button.

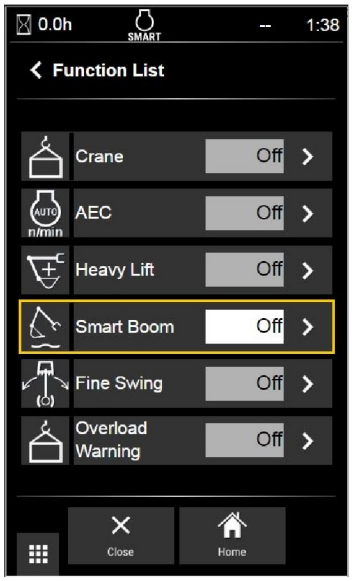

Illustration 472 g06210090

Tap the smart boom option, or if using the jog dial, select the smart boom option and press down on the dial.

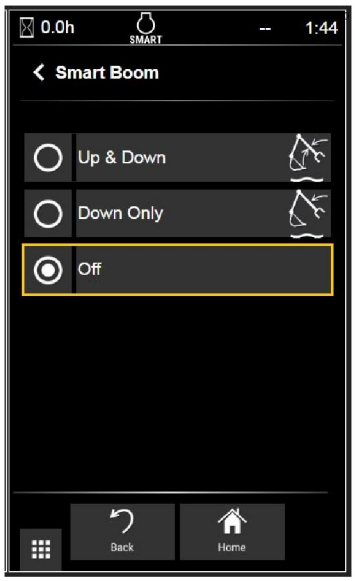

Illustration 473 g06210095

Select either “Up & Down” or “Down Only” from the list. The two options work as follows:

“Up & Down” mode: When the joystick is moved to the BOOM DOWN position, the boom will lower by the weight of the boom. The boom can move upward freely.

“Down Only” mode: The boom will lower by the weight of the boom when the control lever is moved to the BOOM LOWER position. This mode prevents the boom from moving upward. To move the boom upward, the operator must use the boom control joystick to activate the BOOM UP mode.

Press the home button when finished.

During operation of the SmartBoom function, the operator may wish to apply downward force to the boom. The operator can disable the SmartBoom function temporarily with the SmartBoom disable switch. While the trigger switch is pressed, BOOM RAISE and BOOM LOWER will operate in the normal modes. The SmartBoom disable switch is a configurable switch.

i08222281

Work Tool Control (One-Way Flow)
(If Equipped)

SMCS Code: 6700

The following information pertains to work tools that require hydraulic oil flow in one direction. Hydraulic hammers are an example of work tools that require hydraulic oil flow in one direction.

Note: For information that pertains to work tools that require hydraulic oil flow in two directions, refer to Operation and Maintenance Manual, “Work Tool Control (Two-Way Flow)”.

Joystick

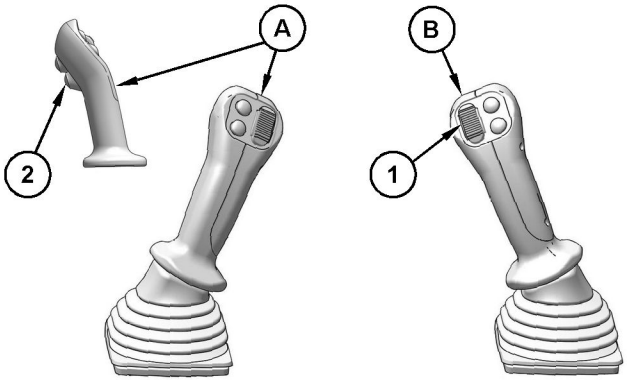

Illustration 474 g06588792

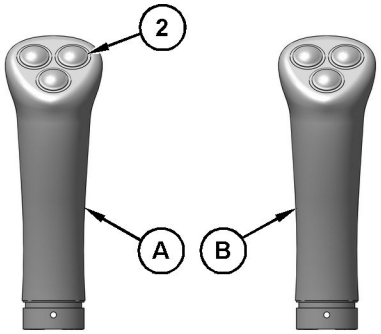

Illustration 475 g06588793

(A) Left joystick
(B) Right joystick

(1) Variable Speed – Move the thumb wheel downward to activate the work tool. Move the thumb wheel further to increase the speed of the work tool.

(2-1) On/Off (Momentary) – While pressing this switch, the work tool will remain activate at a constant rate. Release the switch to turn off the work tool.

(2-2) On/Off (Toggled) – Press the switch once to activate the work tool. Press the switch again to turn off the work tool.

Work Tool Pedal

WARNING

With certain attachment combinations, the work tool pedal can have different functions. Always check for work tool pedal function before using the work tool pedal. Improper operation of the work tool pedal could result in serious injury or death.

The work tool pedal can be installed on either side of the travel pedals. The work tool pedal allows the operator to modulate the speed of the work tool.

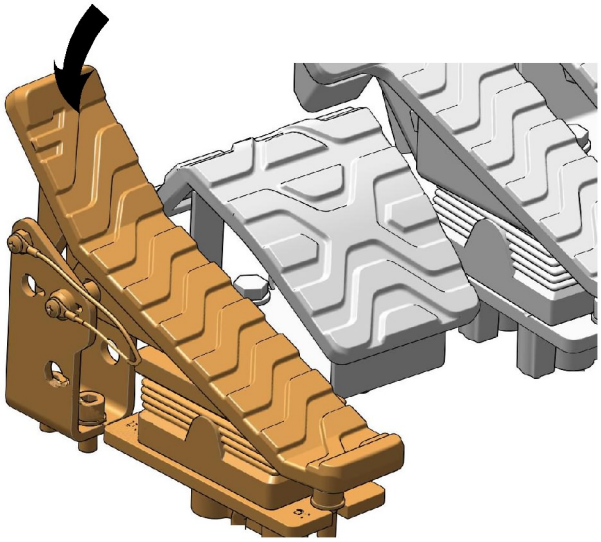

Illustration 476 g06180447

Variable Speed – Push down on the front of the pedal to activate the work tool. Move the pedal further to increase the speed of the work tool. Release the pedal to turn off the work tool.

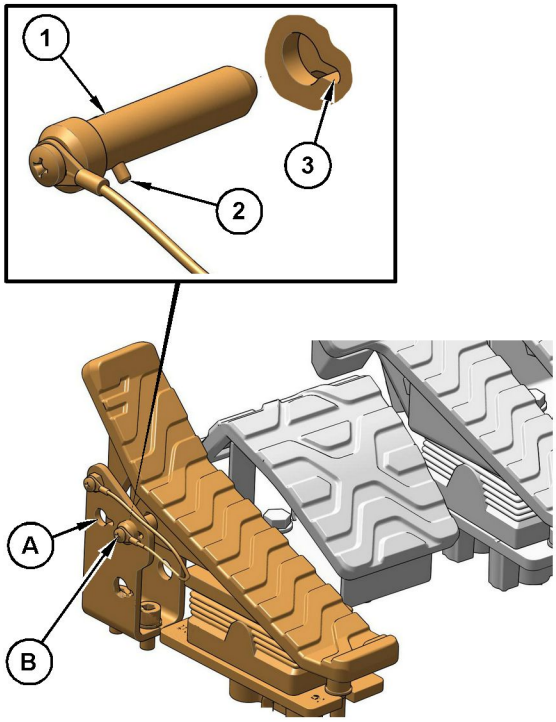

Illustration 477 g06591307

(1) Lock pin
(2) Pin
(3) Notch
(A) UNLOCKED position
(B) LOCKED position

When you are not using the work tool, put the lock pin (1) in LOCKED position (B). This will lock the work tool pedal to prevent any unexpected operation of the work tool.

Note: To prevent lock pin (1) from being accidentally pulled out, insert pin (2) through notch (3) and turn lock pin (1) counterclockwise by 1/4 turn.

i07243676

Work Tool Control (Two-Way Flow)

(If Equipped)

SMCS Code: 6700

WARNING

The joystick and controls on the joystick can be configured with different functions. Always make sure to check the joystick configuration on the monitor before using the machine to avoid unexpected machine movement. These unexpected machine movements could cause a hazard resulting in serious injury or death.

The following information pertains to work tools that require hydraulic oil flow in two directions. These work tools can also be equipped with a rotate circuit. Hydraulic shears, pulverizers, crushers, and grapples are examples of work tools that require hydraulic oil flow in two directions.

Note: For information that pertains to hydraulic hammers, refer to Operation and Maintenance Manual, “Work Tool Control (One-Way)”.

Joystick

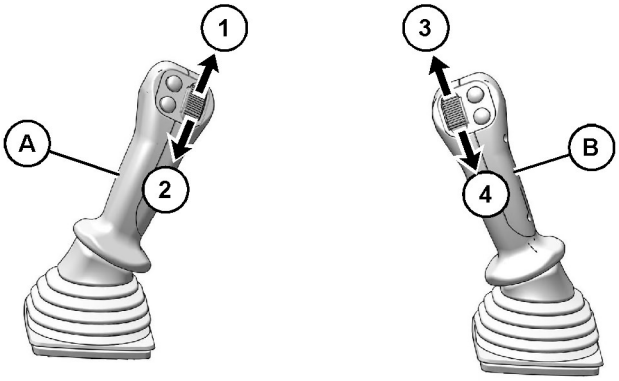

Illustration 478 g06180488

(A) Left joystick
(B) Right joystick

(1) ROTATE CLOCKWISE – Move the thumb wheel upward to rotate the work tool clockwise.

(2) ROTATE COUNTERCLOCKWISE – Move the thumb wheel downward to rotate the work tool counterclockwise.

(3) CLOSE – Move the thumb wheel upward to close the work tool.

(4) OPEN – Move the thumb wheel downward to open the work tool.

Work Tool Pedal

WARNING

With certain attachment combinations, the work tool pedal can have different functions. Always check for work tool pedal function before using the work tool pedal. Improper operation of the work tool pedal could result in serious injury or death.

The work tool pedal can be installed on either side of the travel pedals. The work tool pedal allows the operator to vary the speed of the work tool.

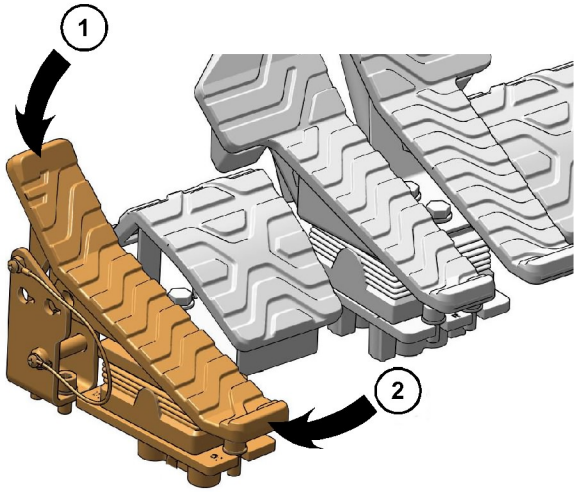

Illustration 479 g06180510

(1) CLOSE – Push down on the front of the pedal to close the work tool.

(2) OPEN – Push down on the rear of the pedal to open the work tool.

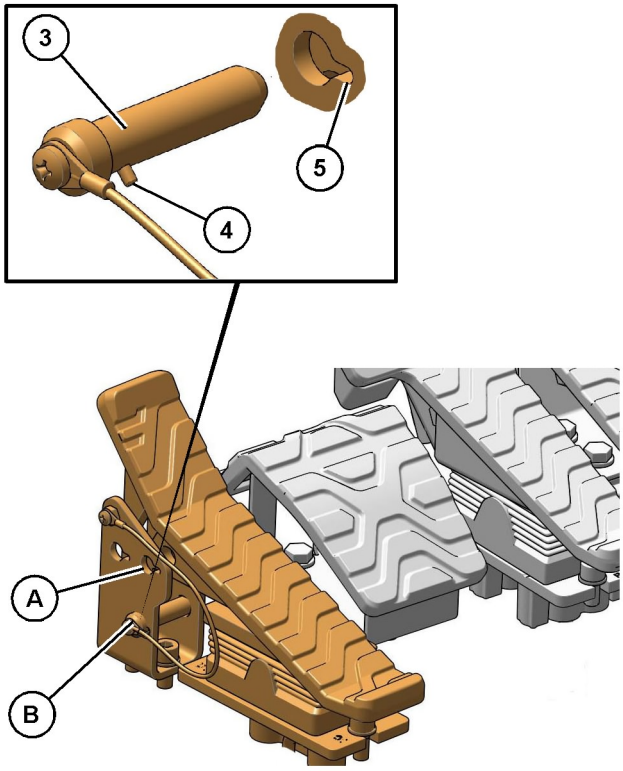

Illustration 480 g06180514

(3) Lock pin
(4) Pin
(5) Notch
(A) LOCKED position
(B) UNLOCKED position

When you are not using the work tool, put the lock pin (3) in LOCKED position (A). This will lock the work tool pedal to prevent any unexpected operation of the work tool.

Note: To prevent lock pin (3) from being accidentally pulled out, insert pin (4) through notch (5) and turn lock pin (3) by 1/4 turn.

i08209549

Joystick Controls Alternate Patterns

SMCS Code: 5059; 5137

Changing Machine Control Pattern (If Equipped)

WARNING

Whenever a change is made to the machine control pattern, also exchange the pattern card in the cab to match the new pattern.

Check the machine control pattern for conformance to the pattern on the card in the cab. If the pattern does not match, change the card to match the machine control pattern before you operate the machine. Failure to do so could result in personal injury.

The machine control pattern can be changed to the ISO/JIS pattern, BHL pattern, MHI pattern, KOBE pattern, or the former SCM pattern. To change the joystick controls between the patterns, refer to Operation and Maintenance Manual, Monitoring System for more information.

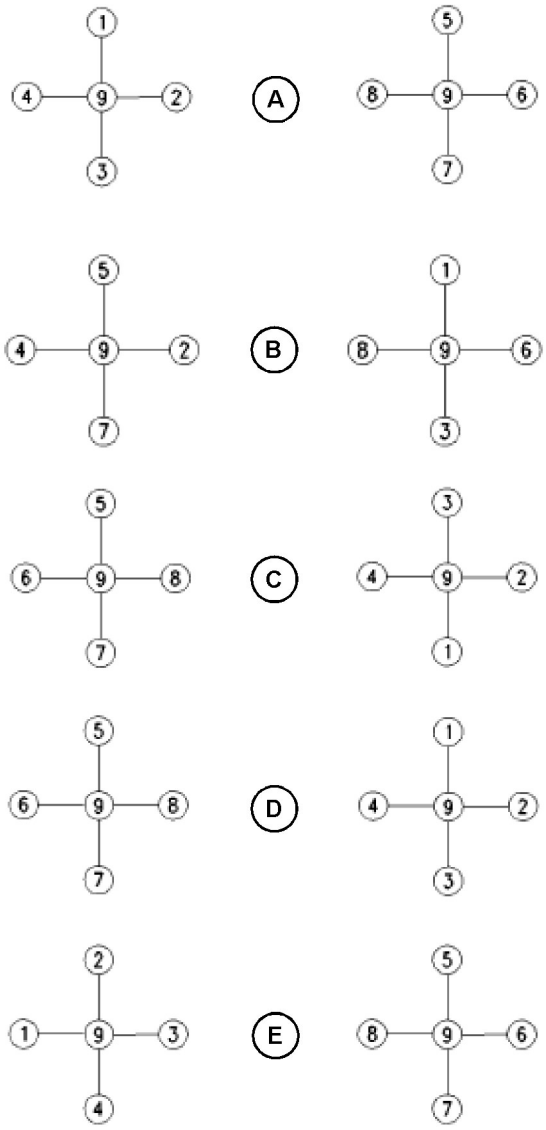

Illustration 481 g06136699

(A) ISO/JIS machine control pattern
(B) BHL machine control pattern
(C) MHI machine control pattern
(D) KOBE machine control pattern
(E) Former SCM machine control pattern

The patterns on the left side of the Illustration show the possible configurations for the left control lever. The patterns on the right side of the Illustration show the possible configurations for the right control lever.

STICK OUT (1) – Move the control lever to this position to move the stick outward.

SWING RIGHT (2) – Move the control lever to this position to swing the upper structure to the right.

STICK IN (3) – Move the control lever to this position to move the stick inward.

SWING LEFT (4) – Move the control lever to this position to swing the upper structure to the left.

BOOM LOWER (5) – Move the control lever to this position to lower the boom.

BUCKET DUMP (6) – Move the control lever to this position to dump the bucket.

BOOM RAISE (7) – Move the control lever to this position to raise the boom.

BUCKET CLOSE (8) – Move the control lever to this position to close the bucket.

HOLD (9) – When the control lever is released from any position, the control lever will return to the HOLD position. Movement of the upper structure will stop.

Two functions may be performed at the same time by moving a control lever diagonally.

If the machine is equipped with a hydraulic hammer, the function of position (6) and of position (8) is different.

HYDRAULIC HAMMER RAISE (6) – Move the control lever to this position to raise the hydraulic hammer.

HYDRAULIC HAMMER LOWER (8) – Move the control lever to this position to lower the hydraulic hammer.

If the machine is equipped with a grapple, the function of position (6) and of position (8) is different.

GRAPPLE OPEN (6) – Move the control lever to this position to open the grapple arms.

GRAPPLE CLOSE (8) – Move the control lever to this position to close the grapple arms.

If the machine is equipped with a clamshell, the function of position (6) and of position (8) is different when in “Clamshell” mode.

Note: When in “Clamshell” mode, the work tool can only be operated if Work Tool Select also has clamshell selected.

CLAMSHELL OPEN (6) – Move the control lever to this position to open the clamshell.

CLAMSHELL CLOSE (8) – Move the control lever to this position to close the clamshell.

i07366331

Work Tool Flow Control

SMCS Code: 7007-WTL

Many hydraulic attachment circuits are adaptable on this machine. Various types of work tools can be installed. Select a suitable arrangement of the hydraulic circuit in order to provide the requirements for flow and the requirements for action for the work tool that is used.

One-way flow is available for work tools such as hydraulic hammers.

Two-way flow is available for work tools such as hydraulic shears.

A manually controlled ball valve is provided in the return line.

Before attachment hydraulic circuits are serviced, place the machine in the servicing position. Stop the engine.

Place the ball valve in the correct position. To determine the correct position, refer to the requirements for the work tool on Illustrations 482 , 483 , and 484 .

Use the manual lever to turn the ball valve. Make sure that you fully turn the ball valve until the ball valve stops.

Never use the manual lever as a step when the manual lever is attached to the ball valve. Remove the manual lever from the valve after the valve is adjusted.

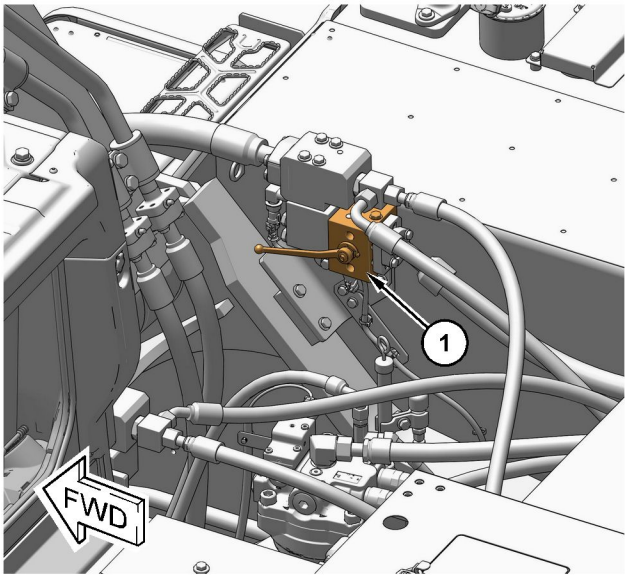

Illustration 482 g06296401

Ball valve location

(1) Ball valve

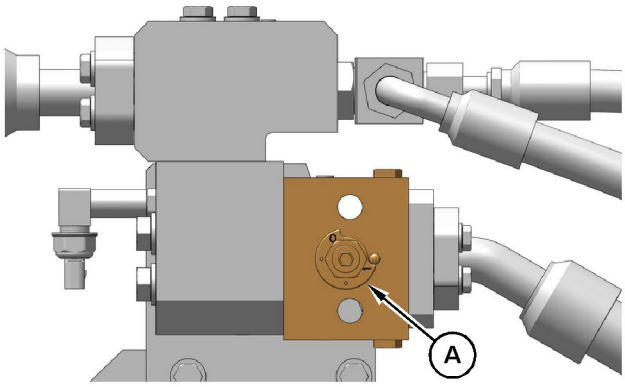

Illustration 483 g06296404

Ball valve (one-way flow position)

(A) Ball valve open

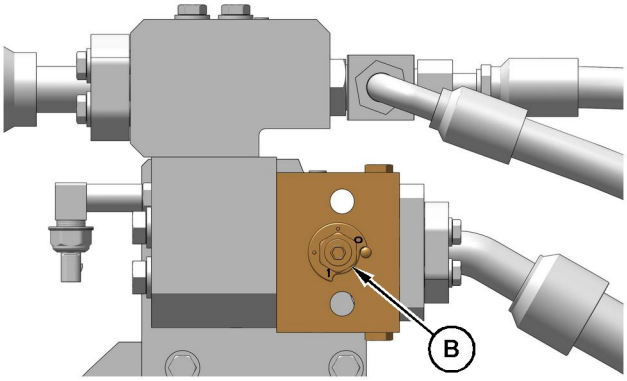

Illustration 484 g06296406

Ball valve (two-way flow position)

(B) Ball valve closed

i07046867

Fuel Tank Shutoff and Drain Control

SMCS Code: 1273

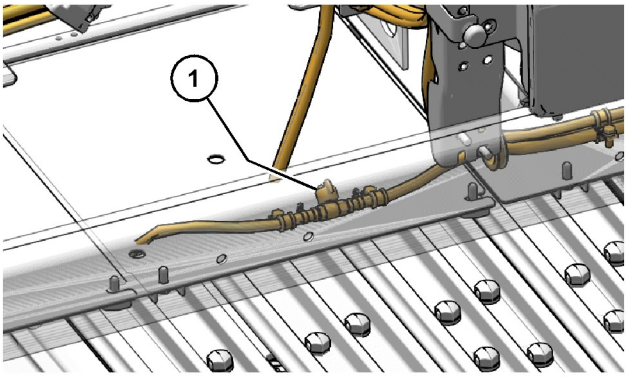

Illustration 485 g06208630

Fuel tank drain valve

Fuel Tank Drain Valve (1) – The drain valve for the fuel tank is located behind the right side access door. To drain the water and sediment from the fuel tank, turn the fuel drain valve counterclockwise. To close the fuel tank drain valve, turn the drain valve clockwise.

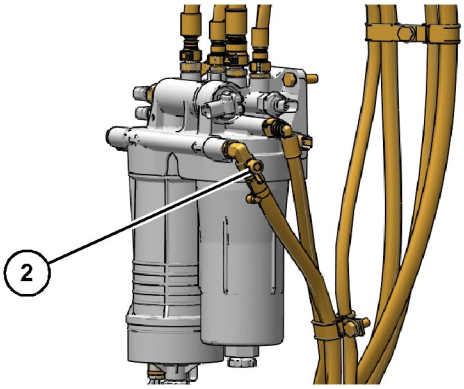

Illustration 486 g06208640

Fuel shutoff valve

Fuel Shutoff Valve (2) – The fuel shutoff valve is on the fuel system water separator. To shut off the fuel supply, turn the fuel shutoff valve clockwise. To turn on the fuel supply, turn the fuel shutoff valve counterclockwise.

Note: For more detailed information that pertains to draining the water and sediment from the fuel tank, refer to Operation and Maintenance Manual, “Fuel Tank Water and Sediment - Drain”.

Engine Starting

i08185791

Engine Starting

SMCS Code: 1000; 1090; 1456; 7000

NOTICE
This machine is equipped with a Cat ® Machine Security System (MSS) and may not start under certain conditions.

NOTICE
The engine start switch must be in the ON position and the engine must be running in order to maintain electrical functions and hydraulic functions. This procedure must be followed in order to prevent serious machine damage.

Note: The engine can start in areas that have temperatures as low as −18°C (0°F). For areas that are colder, a starting kit for cold weather is available.

1. Move the hydraulic lockout control to the LOCKED position.

This machine is equipped with an engine neutral start system. The system only allows the engine to start when the lever for the hydraulic lockout control is in the LOCKED position.

2. Ensure that the joysticks and travel controls are in the HOLD position.

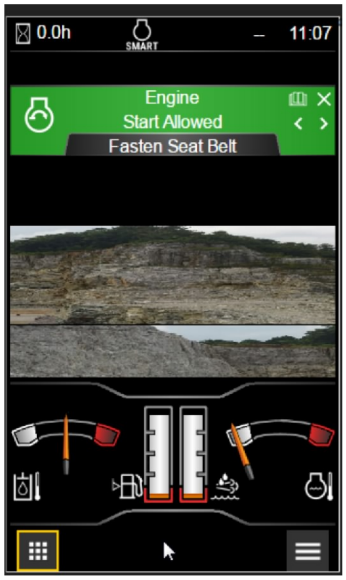

Illustration 487 g06209482

3. The operator passcode, Bluetooth key or Cat App: Fleet management app must be authenticated before starting the engine. Once authenticated, an “Engine Start Allowed” message will appear across the top of the monitor and the start switch LED will turn green.

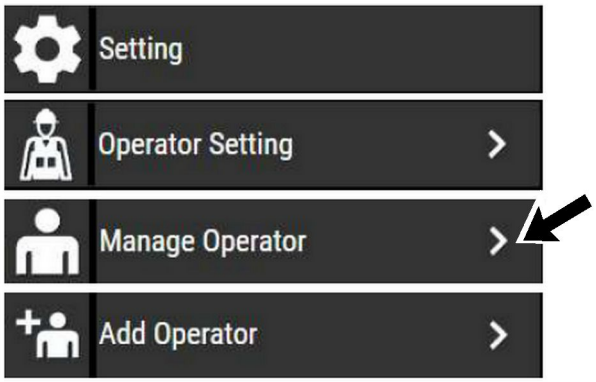

Illustration 488 g06579150

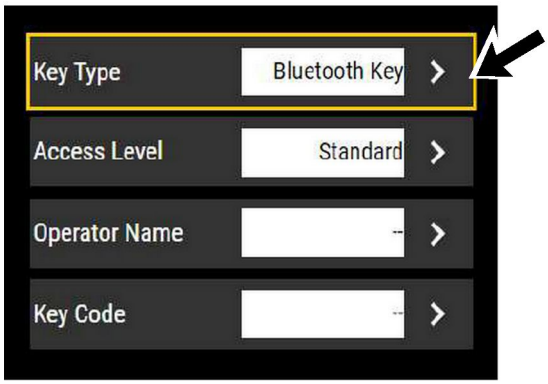

Illustration 489 g06579155

4. Bluetooth devices and passcodes can be registered using the in-cab display if the operator is logged in to the system using a master access account. Contact your Cat dealer for additional information.

Reference: Refer to Operation and Maintenance Manual, Machine Security System, Operator Login for instructions.

5. Before you start the engine, check for the presence of bystanders or maintenance personnel. Ensure that all personnel are clear of the machine. Briefly sound the horn before you start the engine.

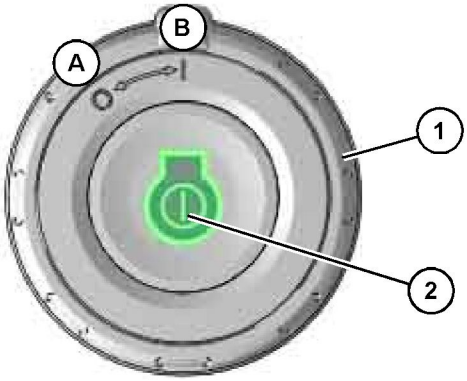

Illustration 490 g06226447

(A) Off
(B) On
(1) Engine start ring
(2) Engine start button

6. Turn the engine start ring(1) to the ON position, then press and hold start button (2) to start the engine. Release the button after the engine has started.

If the engine is having trouble starting, do not crank the engine for more than 30 seconds. Cranking the engine for more than 30 seconds can damage starting system components.

i07549789

Engine and Machine Warm-Up

SMCS Code: 1000; 7000

NOTICE
Keep engine speed low and do not operate until the message 'Warm-Up Mode Power Derate" on the monitor goes out. If it does not go out within thirty seconds, stop the engine and investigate the cause before starting again. Failure to do so, can cause engine damage.

NOTICE
Always run the engine at low idle for at least ten minutes before performing any other operations in cold conditions or each time the engine oil and oil filter are changed in order to protect your engine and hydraulic components.

NOTICE
Depending on the ambient temperature, in order to prevent the machine operation with high speed without sufficient lubrication at the turbo bearing, the engine speed may be set to low speed and the hydraulic power minimized for a pre-determined time after the engine starts. Refer to turbo protection feature.

The engine may automatically change speeds when the machine is stationary and idling in cold ambient temperature for an extended time. This is to:

- Maintain desired coolant temperature.
- Maintain desired operation of engine systems.

During extended idling in cold ambient conditions, engine speed may operate between 900 rpm and 1000 rpm. Operation at 1000 rpm is minimal and will only last for up to 20 minutes.

Hydraulic System

WARNING

When you cycle the machine controls, the machine can move suddenly. Contact between the machine and external objects or ground personnel can result in serious injury or death. Before you cycle the machine controls, the machine should be located in an unobstructed, hazard-free work area that is away from external objects and ground personnel.

1. Make sure that the area is clear of personnel and equipment.

Note: The hydraulic lockout control must be in the UNLOCKED position before the hydraulic controls will function.

2. Allow the engine to warm up at low idle for at least 5 minutes. Engage the work tool controls and disengage the work tool controls. This will speed up the warm-up of the hydraulic components.

   When you idle the machine for warm-up, observe the following recommendations:

   - If the temperature is greater than 0°C (32°F), warm up the engine for approximately 15 minutes.
   - If the temperature is less than 0°C (32°F), warm up the engine for approximately 30 minutes.
   - If the temperature is less than − 18°C (0°F) or if hydraulic functions are sluggish, additional time may be required.

NOTICE
The hydraulic oil temperature should be higher than 25 °C (77 °F) before performing work with the machine. Make sure that the warm-up procedure is performed.

If the hydraulic oil temperature is less than 25 °C (77 °F) and the machine is operated abruptly, serious damage to the hydraulic components may occur.

Note: The recommended operating temperature of the hydraulic fluid for this machine is 55 °C (131 °F).

3. To warm up the hydraulic oil, turn the engine speed dial to the medium engine speed. Run the engine for approximately 5 minutes and move the joystick intermittently from the BUCKET DUMP position to the HOLD position. Do not hold the joystick in the BUCKET DUMP position with the bucket cylinder fully extended for more than 10 seconds.

   This allows the oil to attain relief pressure, which causes the oil to warm up more rapidly.

4. Turn the engine speed dial to the maximum engine speed and repeat Step 3.
5. Cycle all controls to circulate warm oil through all hydraulic cylinders and all hydraulic lines, and through the swing motor and travel motors.
6. Observe the gauges and the indicators frequently during the operation.

Turbo Protection Power Derate – After an engine start, the engine speed will be set to low speed and the hydraulic power limited for a time period . During this period, the monitor displays the message "Warm -Up Mode Power Derate". (Maximum is around 30 seconds). After the turbo bearing lubrication is sufficient, the engine speed goes to the setting dial speed and the monitor stops to display the message.

Improve Cold-Weather Performance

Covers installed over the vents in the radiator compartment door will help to control overcooling in ambient temperatures below −15° C (5° F).

The materials used for the covers and the method used to install the covers is at the installers discretion.

Install the covers if overcooling is observed while the machine is idling in ambient temperatures below −15° C (5° F).

Stop the machine, and remove the covers under the following conditions:

- The ambient temperature is above −15° C (5° F).
- The engine temperature gauge indicates overheating.
- The hydraulic oil temperature gauge indicates overheating.

Recommendation for Crankcase Breather Protection (Machines with C4.4 and C7.1)

Crankcase ventilation gases contain a large quantity of water vapor. This water vapor can freeze in cold ambient conditions and can plug or damage the crankcase ventilation system. If the engine is operated in temperatures below −25° C (−13° F), measures must be taken to prevent freezing and plugging of the breather system. Insulated hoses and a heated canister assembly should be installed.

Consult with your Cat dealer for the recommended breather components for operation from −25° to −40° C (−13° to −40°F).

Installation

Illustration 491 g06181368
Vent locations on the radiator compartment door

1. Clean the surface of the radiator compartment door.
2. Install the covers in the locations shown in Illustration 491 . The covers should fully cover the door vents.

Operation

i07348768

Operation Information

SMCS Code: 7000

Note: Operating Temperature Range for the Machine The machine must function satisfactorily in the anticipated ambient temperature limits that are encountered during operation. The standard machine configuration is intended for use within an ambient temperature range of −18 °C (0 °F) to 43 °C (109 °F). Special configurations for different ambient temperatures may be available. Consult your Cat dealer for additional information on special configurations of your machine.

Make sure that no personnel are on the machine or near the machine to prevent any personal injury. Keep the machine under control at all times to prevent injury.

Sound the horn and allow adequate time for bystanders to clear the area before moving the machine into a restricted visibility area. Follow local practices for your machine application. For more information refer to Operation and Maintenance Manual, “Restricted Visibility”.

Reduce the engine speed when you maneuver the machine in tight quarters and when you drive over an incline.

Select the necessary travel speed range before you drive downgrade. Do not change the travel speed range while you drive downhill.

Use the same travel speed on a downgrade and on an upgrade.

When you travel for any distance, keep the stick inward and carry the boom in a low position.

When you drive up a steep grade, keep the boom as close to the ground as possible.

When you travel uphill or you travel downhill, keep the boom on the uphill side of the machine.

1. Adjust the operator seat.

2. Fasten the seat belt.

Illustration 492 g06181515

3. Turn the engine speed dial to the desired operating range.

4. Move the hydraulic lockout control to the UNLOCKED position.

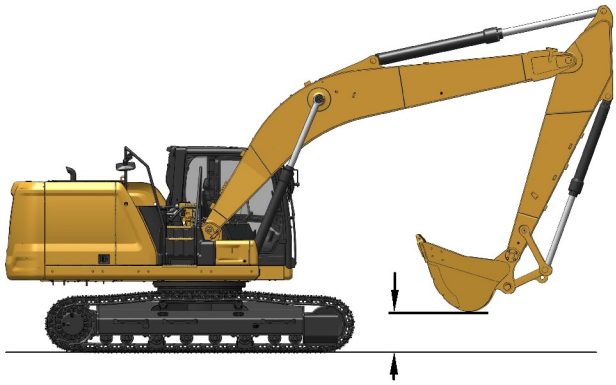

Illustration 493 g06181525

5. Raise the boom enough to provide sufficient ground clearance.

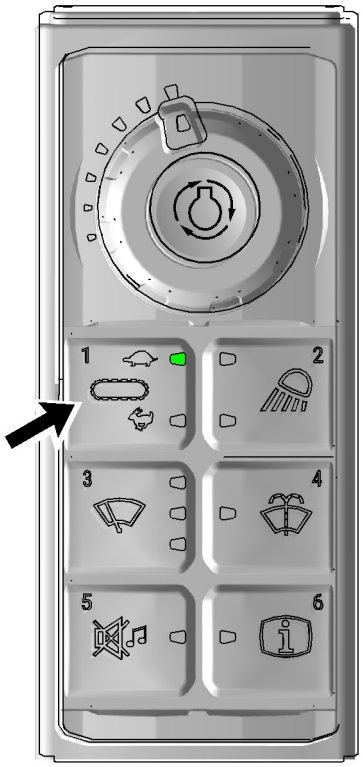

Illustration 494 g06181517

6. Select the desired travel speed by operating the travel speed control switch. The indicator will light to display the active mode.

7. Make sure that the position of the upper structure and of the undercarriage is known before you move the machine. The drive sprockets should be at the rear of the machine.

Note: The directional steering controls will operate normally if the drive sprockets are at the rear of the machine and the idlers are at the front of the machine and under the cab. When the sprockets are under the cab, the travel controls will operate backward.

8. Turn the engine speed dial to increase the engine speed (rpm) to the desired speed.

9. Push both travel levers forward at the same time to travel forward. If both travel levers are pushed farther, the travel speed at the selected engine speed (rpm) will be faster.

Note: If the machine does not operate or if the machine does not travel in a straight line, consult your Cat dealer.

10. See Operation and Maintenance Manual, “Operator Controls” for information about spot turning and about pivot turns.

11. When you make turns in soft material, travel in a forward direction occasionally to clear the tracks.

12. Slowly move both of the travel levers or both of the travel pedals to the CENTER position to stop the machine.

Lifting Objects

If the machine is equipped with the CE plate per requirements for the European Union, used to lift objects, then the machine must be equipped with a boom lowering control valve, a stick lowering control valve, and an overload warning device.

A fit for purpose test was completed to confirm that a properly equipped machine meets the requirements of the European Union Machinery Directive “2006/42/EC” for lifting objects.

The overload warning device (if equipped) must be adjusted for the bucket linkage and bucket size that is installed on the machine. Adjust the overload warning device for proper operation.

The setting for the overload warning device (if equipped) should be checked by an authorized dealer.

i07311368

Frozen Ground Conditions

SMCS Code: 7000

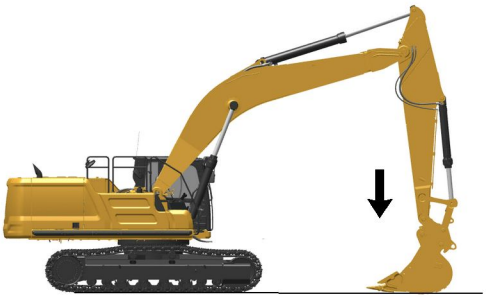

Illustration 495 g06279284

To free the tracks from frozen ground, swing the boom to the front of the machine. Use boom down pressure to free the idler end of the machine.

Swing the boom to the rear of the machine. Use boom down pressure to free the sprocket end of the machine.

i07311402

Equipment Lowering with Engine Stopped

SMCS Code: 7000

To lower the boom, place the hydraulic lockout control in the UNLOCKED position. Move the joystick to the BOOM LOWER position. If the accumulator is still charged, the boom will lower.

If the boom does not lower, the accumulator is empty. Use one of the following procedures to lower the boom.

Machines Equipped with Boom Lowering Control Valves

WARNING

Boom load may cause cylinder oil pressure to reach relief pressure of the boom lowering control device when the boom is supported by one cylinder. Boom can lower suddenly, causing possible injury or death.

To avoid possible injury or death, be sure no one is under or near the work tool before manually lowering the boom.

Keep all personnel away from the boom drop area when lowering the boom with the engine stopped.

The boom lowering control valve is at the back of the base of the boom. The boom lowering control valve allows the operator to manually lower the boom if the engine is stopped.

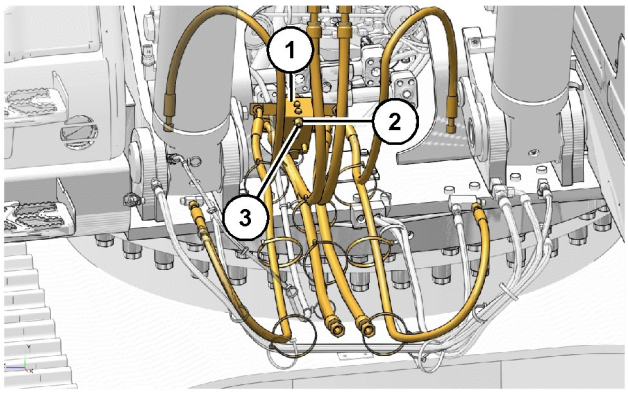

Illustration 496 g06209514

(1) Boom lowering control valve
(2) Locknut
(3) Check valve

1. Release the pressure in the hydraulic system. Refer to Operation and Maintenance Manual, System Pressure Release for instructions.
2. Loosen locknut (2) on the boom lowering control valve (1).
3. Slowly turn check valve (3) counterclockwise until the check valve stops. The boom will lower to the ground.
4. Make sure that the work tool is resting on the ground. Tighten check valve to 2.25 ± 0.25 N·m (20 ± 3 lb in).
5. Tighten the locknut (2) to 4 ± 0.5 N·m (35 ± 4 lb in).
6. Before operating the machine, make any necessary repairs.

For additional information, consult your Caterpillar dealer.

Machines without a Boom Lowering Control Valve

WARNING

Be sure no one is under or near the work tools before manually lowering the boom. Keep all personnel away from the boom drop area when lowering the boom with the engine stopped in order to avoid possible personal injury.

Use the following procedure to manually lower the boom due to an engine malfunction.

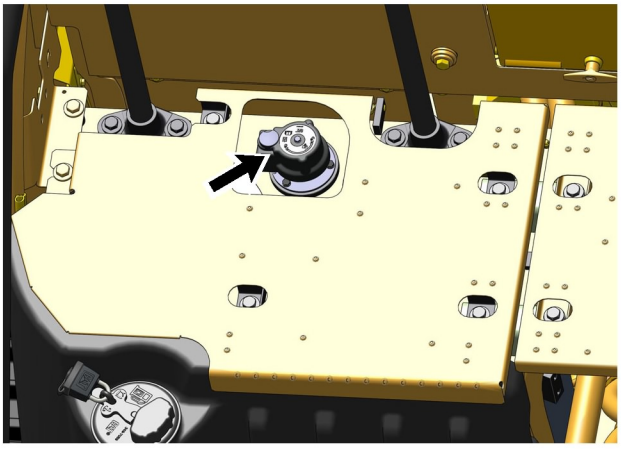

Illustration 497 g06184080

Hydraulic tank filler cap location

WARNING

Pressurized system!

The hydraulic tank contains hot oil under pressure. To prevent burns from the sudden release of hot oil, relieve the tank pressure with the engine off. Relieve pressure by slowly turning the cap until the cap reaches the secondary stop.

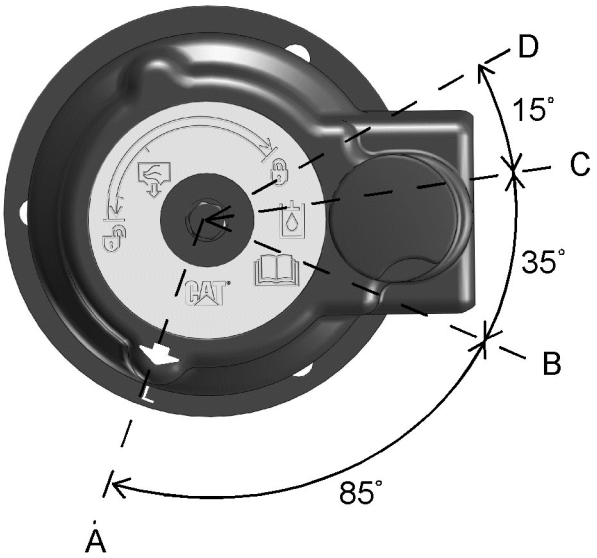

Illustration 498 g06184990

Filler cap

(A) LOCK position
(B) PRESSURE RELEASE - START position
(C) PRESSURE RELEASE - END position
(D) OPEN position

1. Release the pressure that may be present in the return hydraulic circuit with the following procedure. Refer to Illustration 498 for filler cap positions.

a. Turn the filler cap counterclockwise and move the arrow from position (A) to position (B).

b. Release the pressure for a minimum of 45 seconds by moving the arrow from position (B) to position (C).

c. Move the arrow from position (C) to position (D).

d. After the tank pressure is relieved, remove the filler cap.

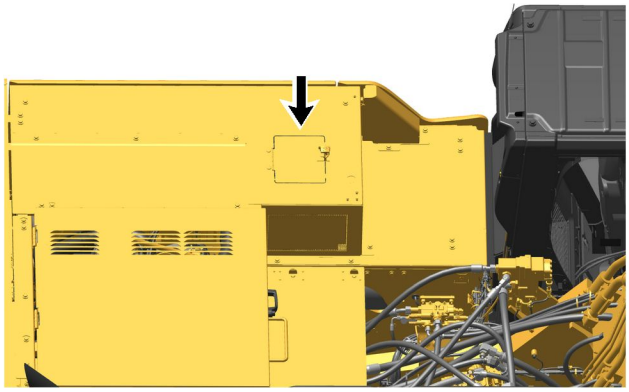

Illustration 499 g06279315

2. Open the access cover.

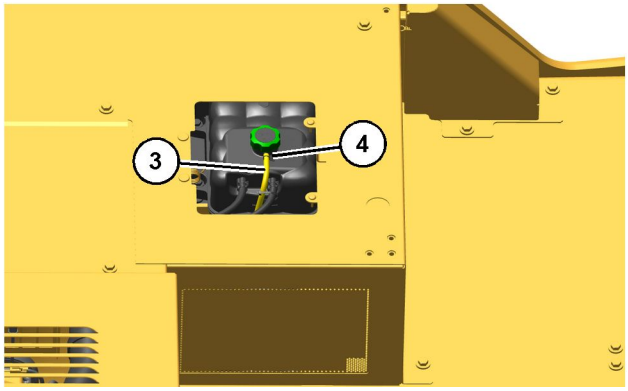

Illustration 500 g06279321

(3) Hose
(4) Clamp

3. Loosen clamp (4) and disconnect hose (3) from the reservoir. Remove the clamps and the cable straps that secure the hose to the machine.

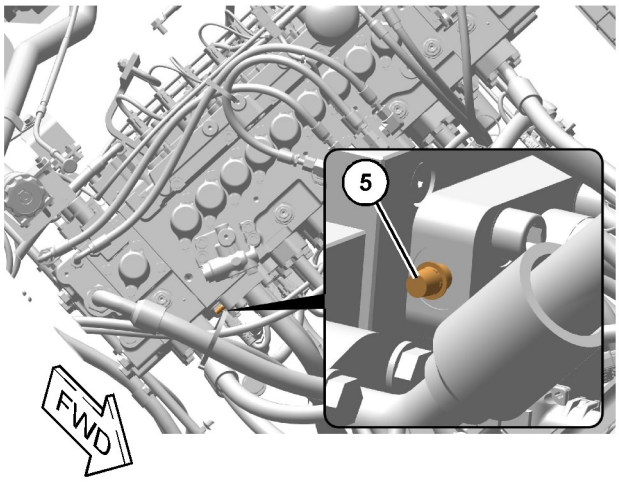

Illustration 501 g06205184

Main control valve

(5) Screw

4. Connect one end of the radiator hose to screw (5). Put the other end of the hose into the hydraulic tank opening. The screw is at the front, right side of the main control valve.

5. Slowly loosen screw (5) by a maximum of 1/2 turn. This allows the hydraulic oil in the boom circuit to drain into the hydraulic tank. The boom will now start to lower.

6. Make sure that the work tool has lowered all the way to the ground. Tighten screw (5) to 13 ± 2 N·m (9 ± 1 lb ft).

7. Disconnect the hose from the screw. Do not allow the oil that is contained in the hose to spill. Drain the oil into a suitable container.

8. Connect the hose to the original position on the radiator and install the hydraulic tank filler cap.

9. Close the access cover.

After completion of the manual boom lowering, make necessary repairs before you operate the machine again.

Pressure Release of Auxiliary Lines

WARNING

Personal injury can result from hot oil spray and raised work tools.

Make sure all the work tools have been lowered, the oil is cool and the pressure has been released from the hydraulic system before removing any components or lines.

Do not allow hot oil or components to contact skin.

Note: Refer to Operation and Maintenance, “General Hazard Information” for information on containing fluid spillage.

Refer to the procedure below before any of the following conditions.

- The work tool is changed.
- The position of the ball valve is changed.

1. Turn the engine start switch to the OFF position.

2. Place the hydraulic lockout lever in the UNLOCKED position.

3. Release the pressure in the auxiliary lines by pressing the auxiliary control buttons or the auxiliary control pedal three times.

4. Place the hydraulic lockout lever in the LOCKED position.

5. Change the work tool.

Note: There should be movement in the auxiliary hydraulic lines as the pressure is released. If there is no movement in the auxiliary hydraulic lines, start the engine and run the engine for 20 seconds. Repeat steps 1 to 5.

For additional information, consult your Cat dealer.

Operating Techniques

i08069554

Operating Technique Information

SMCS Code: 7000

WARNING

Know the maximum height and the maximum reach of your machine. Serious injury or death by electrocution can occur if the machine or the work tools are not kept a safe distance from electrical power lines. Keep a distance of at least 3000 mm (118 inch) plus an additional 10 mm (0.4 inch) for each 1000 volts over 50000 volts.

For safety, one of the following may require a greater distance:

- Local codes
- State codes
- Requirements of the job site

NOTICE

When swinging into a ditch, do not use the ditch to stop the swinging motion. Inspect the machine for damage if the boom is swung into a bank or an object.

Repeated stopping by an object can cause structural damage if the boom is swung into a bank or an object.

With certain boom-stick-bucket combinations, the bucket or worktool can hit the cab and/or the front structure of the machine. Always check for interference when first operating a new bucket or a new work tool. Keep the bucket or work tool away from the cab and away from the front structure during operation.

Whenever the tracks of the machine raise off the ground while digging, lower the machine back to the ground smoothly. DO NOT DROP OR CATCH IT WITH THE HYDRAULICS. Damage to the machine can result.

With certain combinations of work tools, the third pedal can have different functions. Always check the function of the third pedal before you use the third pedal.

Know the location of any buried cables. Mark the locations clearly before you dig.

Consult your Cat dealer for special work tool tips that are available for use in severe applications.

Move the machine whenever the position for operating the machine is not efficient. The machine can be moved forward or backward during the operating cycle.

When you operate the machine in close places, utilize the bucket or the other work tool to perform the following functions:

- Pushing the machine
- Pulling the machine
- Lifting the tracks

Use a comfortable travel speed while you operate the machine.

Operating efficiency can be increased by using more than one machine control to perform a task.

Never swing a load over a truck cab or workers.

Position the truck so that material can be loaded from the rear of the truck or from the side of the truck. Load the truck evenly so that the rear axles are not overloaded.

An oversize bucket or a bucket that is equipped with side cutters should not be used in rocky material. These types of buckets slow down the cycle. Damage to the bucket and to other machine components could result.

Coaching Tips

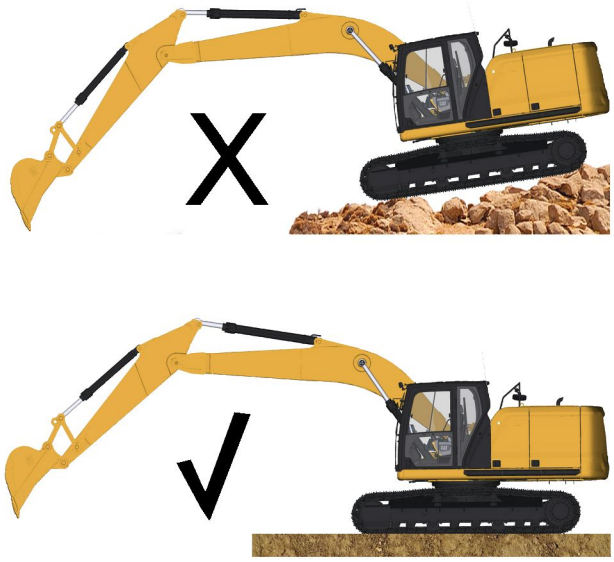

Illustration 502 g06223763

Digging with a stable machine increases productivity. Create a stable work platform.

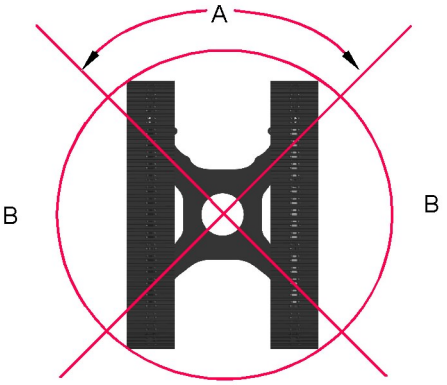

Illustration 503 g06210141

(A) Most stable dig
(B) Dump

For improved stability: Do not dig over the drives or perpendicular to the tracks.

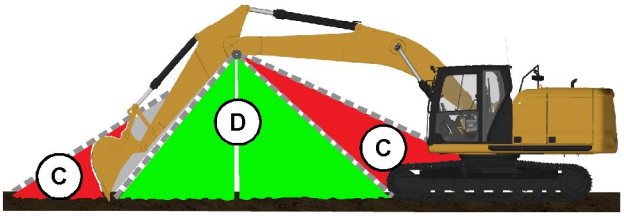

Illustration 504 g06212328

(C) Weak crowd force
(D) Ideal crowd force

Dig from the top down in layers. Try to have a full bucket by the time the stick is vertical, but do not reach too far with the stick. The most crowd force is generated with the stick +/- 30 degrees from vertical.

Minimize unneeded movement. Only curl/dump the bucket as much as required to hold/dump material.

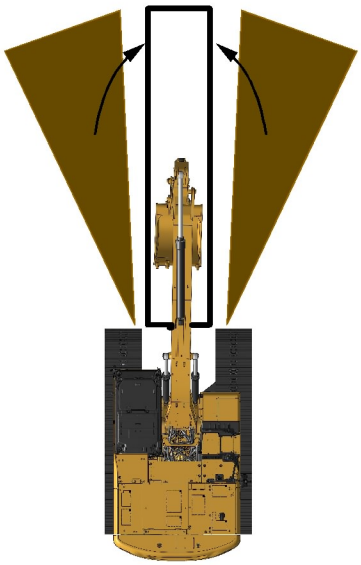

Illustration 505 g06210334

Minimize unneeded movement. During backfilling, start with the material closest to the trench.

Illustration 506 g06210343

Watch your surroundings. Swing left to dump material for better visibility.

Watch the bucket. The bucket can contact the tracks or the cab.

Concentrate on being smooth, speed will come with practice.

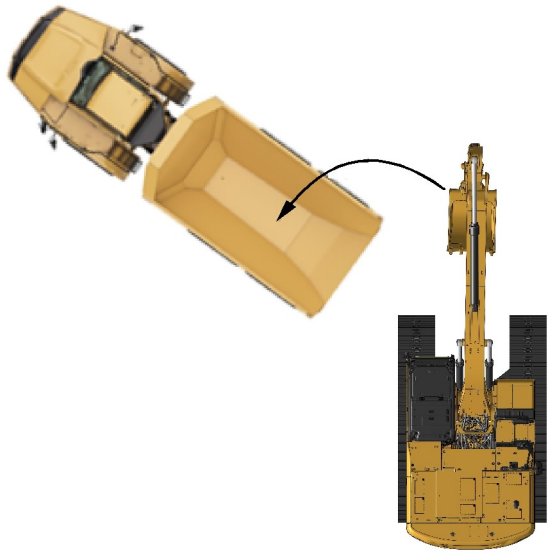

Illustration 507 g06212604

Truck placement will affect efficiency: 45 degree truck loading is more efficient than 90 degree. Spotting the truck too far from the excavator causes excessive motion.

Load from a bench when possible. Bench loading is more efficient.

Restricted Operation

Illustration 508 g06222487

Do not use the swing force to perform the following operations:

- Soil compaction
- Ground breaking
- Demolition

Do not swing the machine while the bucket tips are in the soil.

These operations will damage the boom, the stick, and the work tool and the operations will reduce the life of the equipment.

Illustration 509 g06212594

Do not use the dropping force of the bucket or work tool as a hammer. This will bring excessive force on the rear of the machine. Possible damage to the machine could result.

Illustration 510 g06222492

If the cylinder is operated at the end of the stroke during operations, excessive force will occur on the stopper on the inside of the cylinder. This will reduce the life of the cylinder and structures. To avoid this problem, always leave a small margin of play when the cylinder is operated.

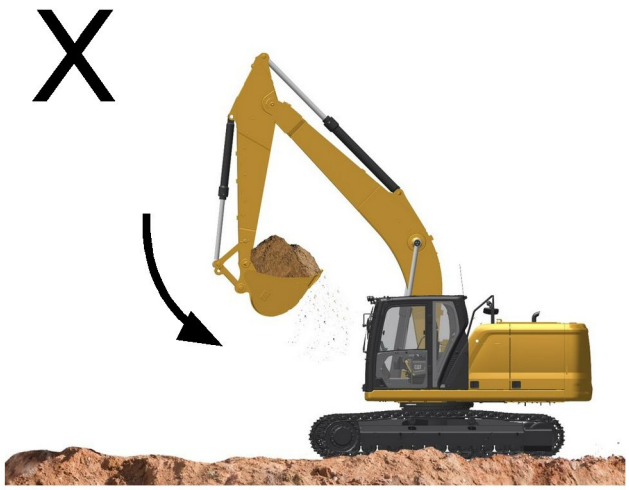

Illustration 511 g06222498

If the stick IN function is operated at full speed with a fully loaded bucket or heavy work tool attachment to the end of the cylinder stroke, excessive force will occur inside the stick cylinder. This action will reduce the life of the stick cylinder. To avoid this problem, always operate a stick IN function with moderate speed towards the end of cylinder stroke.

Illustration 512 g06222500

While the bucket is in the ground, do not use the travel force for any excavation. This operation will cause excessive force on the rear of the machine.

Illustration 513 g06222505

Do not use the dropping force of the rear of the machine for excavation. This operation will damage the machine.

Operating Precaution

Illustration 514 g06222507

NOTICE

Do not allow the machine to swing from the force of traveling when you use the bucket , the stick, or the boom to assist in travel. If the force from traveling causes the machine to swing, damage may occur to the swing motor and to the swing drive.

Do not use the force of the bucket, the stick, or the boom to assist in turning the machine while the machine is traveling. This technique is referred to as “jump steering”. This technique will damage the swing motor and the swing brake.

Illustration 515 g06222509

When deep holes are dug, do not lower the boom so that the bottom side of the boom touches the ground.

When deep holes are dug, do not allow the boom to interfere with the tracks.

Grade and Assist Operating Tips

The following image displays proper stick speeds for accurate grading. One of the factors to accuracy is the grade assist speed setting. The setting can be set to Quick, Normal, or Fine. The settings are found in the Grade Assist screen on the monitor.

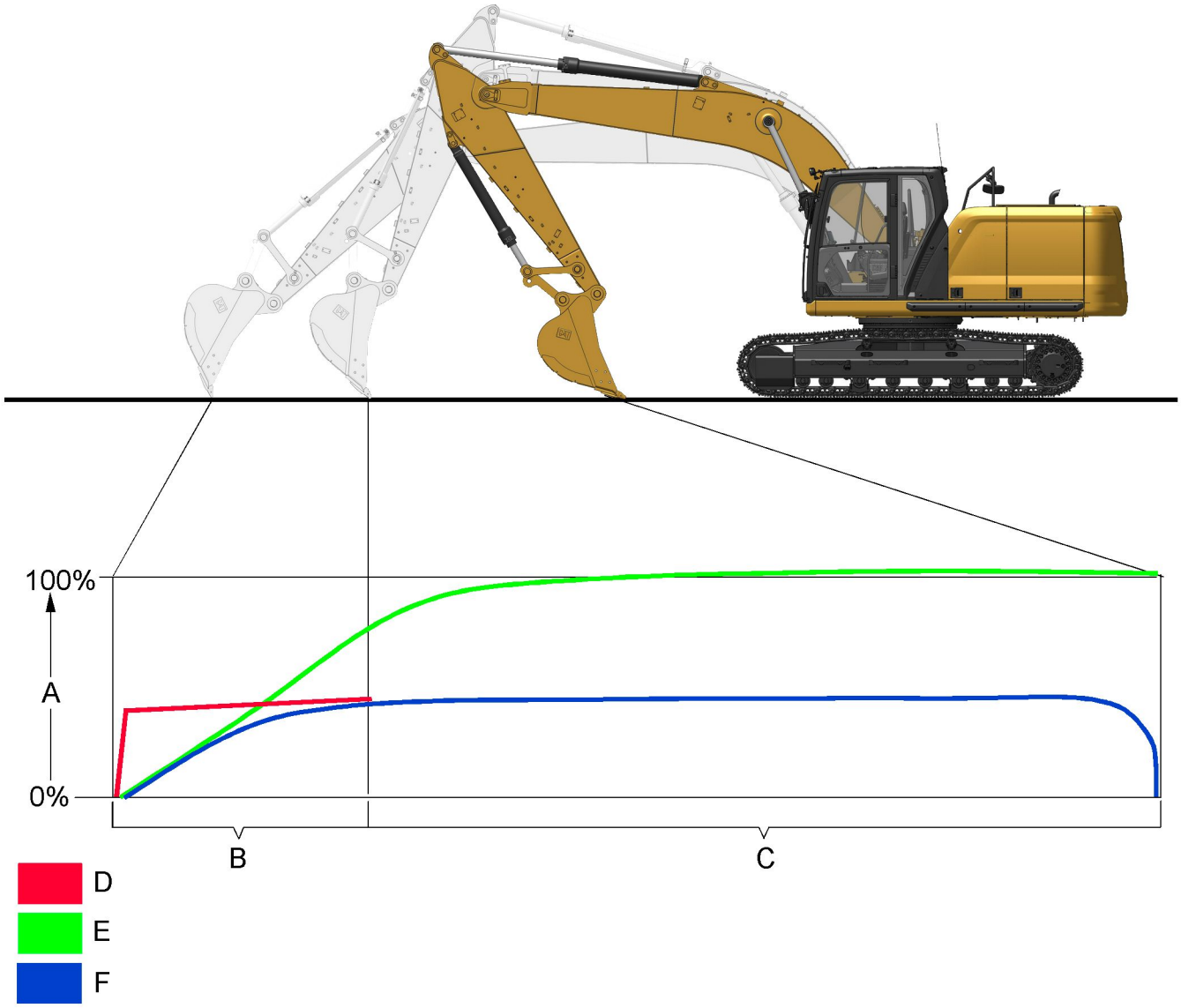

Illustration 516 g06250472

Stick speed vs. accuracy

(A) Stick joystick movement
(B) Joystick movement must be gradual
(C) In fine or normal mode, joystick input can be at 100 percent.
(D) Joystick movement too fast
(E) Good for fine or normal mode
(F) Good in any mode

For best results using Cat Grade, it is important to be cognizant of stick speed in order to obtain accurate results. When the bucket touches the ground before digging, the initial dig movement must be gradual. If operating in Fine or Normal mode, joystick speed can be increased to 100 percent after the slow initial engagement. Approximately 50 percent stick speed is necessary to maintain accuracy when in Quick mode after the slow initial engagement.

Cut/fill error can be minimized if the work tool is properly calibrated and the operator maintains a deliberate speed of operation.

Smart Boom

When using the smart boom function, it is necessary to slow down stick speed. Smart boom cannot keep up when the stick is operating at a rapid pace. This is particularly noticeable when the boom is at the raise/lower transition point and the stick is near vertical.

i07058371

Travel in Water and Mud

SMCS Code: 7000-V6

NOTICE
When working in or around any body of water, around a stream or river, or in conditions of heavy mud, be careful that the swing bearing, the swing drive gear, and the swivel joint do not dip into water, mud, sand, or gravel. If the swing bearing dips into water, mud, sand, or gravel, immediately grease the swing bearing until the used grease leaks from the outer circle of the swing bearing. Failure to carry out this procedure may cause premature wear in the swing bearing.

Illustration 517 g06223764

Depth of water to the center of the track carrier roller.

The following guidelines pertain to travel across water and travel through mud, sand, or gravel.

The machine can travel across a river only under the following conditions:

- The bed of the river is flat.
- The flow of the river is slow.
- The machine dips into the water only to the center of the track carrier roller (dimension A).

NOTICE
Do not allow the fan on the engine to contact the water while the machine travels through the water. Do not allow the fan on the engine to contact the water during a swing while the machine is in the water. Damage to the fan may occur if the fan contacts the water.

While you cross the river, carefully confirm the depth of the water with the bucket. Do not move the machine into an area that has a water depth that is greater than Dimension A.

The machine may sink gradually on soft ground. Therefore, you should frequently check the height of the undercarriage from ground level and the depth of water on the ground.

Check the swing gear by looking through the port for inspection that is on the upper frame. If there is water in the swing gear, contact your Cat dealer for the required maintenance on the swing gear.

After you travel through water, carefully clean the machine to remove any salt, sand, or other foreign matter.

Procedure for Removing the Machine from Water or Mud

NOTICE
Do not allow the machine to swing from the force of traveling when you use the bucket , the stick, or the boom to assist in travel. If the force from traveling causes the machine to swing, damage may occur to the swing motor and to the swing drive.

Illustration 518 g06222519

1. You may not be able to move the machine by using the travel controls only. In this case use both the travel control levers/pedals and the stick to pull the machine out of the water or ground.

Illustration 519 g06222525

2. The machine may slip because of a steep slope. The procedure in Step 1 may not work. In this case, first rotate the upper structure by 180°. Then use both the travel control levers/pedals and the stick to move the machine up the slope.

Illustration 520 g06212337

3. It may be impossible to travel because the bottom of the frame comes into contact with the ground or the undercarriage is clogged with mud or gravel. In this case, operate the boom and the stick together. Raise the track and rotate the track forward and backward to remove the mud and the gravel.

i07058860

Boom, Stick and Bucket Operation

SMCS Code: 7000

Digging

Illustration 521 g06212506

1. Position the stick at a 70 degree angle to the ground.

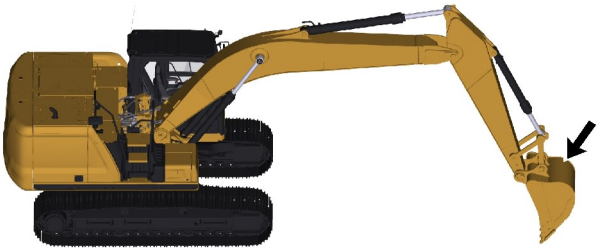

Illustration 522 g06212513

2. Position the bucket cutting edge at a 120 degree angle to the ground. Maximum breakout force can now be exerted with the bucket.

Illustration 523 g06222533

3. Move the stick toward the cab and keep the bucket parallel to the ground.

Illustration 524 g06222535

4. If the stick stops due to the load, raise the boom and/or perform a curl to adjust the depth of the cut.

5. To apply the greatest force at the cutting edge, decrease the down pressure as you move the stick toward the cab.

6. Maintain a bucket attitude that ensures a continuous flow of material into the bucket.

7. Continue the pass in a horizontal direction so that material peels into the bucket.

Illustration 525 g06222538

8. Close the bucket and raise the boom when the pass has been completed.

Illustration 526 g06223077

9. Engage the swing control when the bucket is clear of the excavation.

Illustration 527 g06223078

10. To dump a load, move the stick outward and open the bucket in a smooth motion.

Lifting Objects

WARNING

To prevent injury, do not exceed the rated load capacity of the machine. If the machine is not on level ground, load capacities will vary.

NOTICE
Damage to bucket cylinder, bucket or linkage could result if slings are placed incorrectly.

There may be local regulations and/or government regulations that govern the use of machines which lift heavy objects. Obey all local and government regulations.

If this machine is used to lift objects within an area that is controlled by the European Directive “2006/42/EC”, the machine must be equipped with a boom lowering control valve, a stick lowering control valve, and an overload warning device.

Japan regulations require a shovel crane configuration to lift certain objects.

Contact your Cat dealer for additional information.

Short slings will prevent excessive load swing.

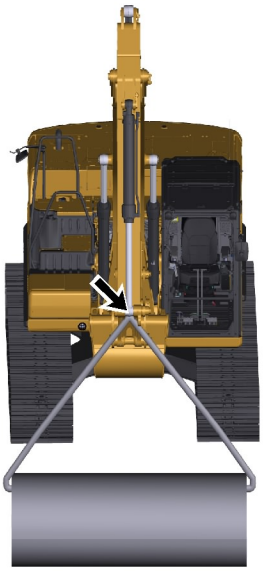

Illustration 528 g06212526

Use the lifting eye that is provided on the linkage to lift objects.

If the lifting eye is used, the connection must be made with a sling or with a shackle.

Illustration 529 g06212532

An unstable condition can exist if a load exceeds the machine load rating or if a heavy load is swung over an end or over a side.

Illustration 530 g06212530

The most stable lifting position is over a corner of the machine.

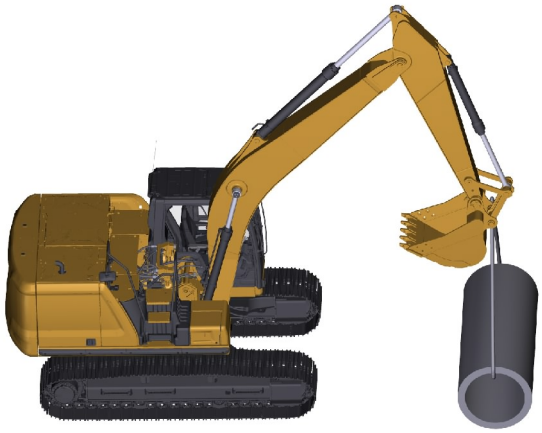

Illustration 531 g06212535

For the best stability, carry a load close to the machine and to the ground.

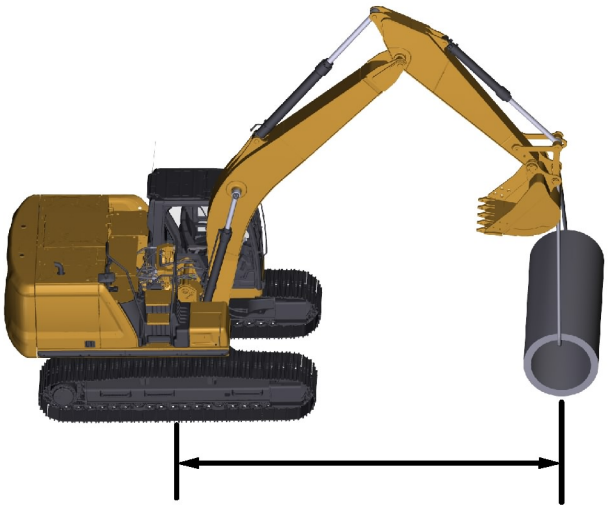

Illustration 532 g06212539

Lift capacity decreases as the distance from the swing centerline is increased.

Machines that are Equipped with a Long Reach Configuration

Machines with a long reach configuration require larger swing drift than standard machines when stopping, because inertial force in time of swing is large. Taking this into account, adjustments are made in timing for applying the swing brakes and speed of swinging.

Machines with a long reach configuration could be damaged and stability of the machine would be adversely affected if a control was suddenly operated, because inertial force of work tool is large.

i03875131

SmartBoom Operation
(If Equipped)

SMCS Code: 5461-ZS; 7332

WARNING

Personal injury or death can result from not following the proper procedures.

To avoid the possibility of injury or death, follow the established procedure.

WARNING

Activating the SmartBoom function and using the work tool joystick control while the front of the machine is elevated could result in unexpected machine motion. Unexpected machine motion could result in serious injury or death. Do not activate the SmartBoom function if the front of the machine is elevated by the front linkage.

WARNING

Do not elevate or lower the track when in the SmartBoom mode. Follow the operation procedures for the SmartBoom in the Operation and Maintenance Manual. Failure to follow these instructions can result in serious injury or death.

WARNING

Always make sure that the boom control joystick is in the NEUTRAL position before activating the SmartBoom control. Activating the SmartBoom control with the joystick out of the neutral position could resulted in unexpected machine motion which could result in serious injury or death.

WARNING

Do not select any SmartBoom mode, using the SmartBoom selector switch located on the console, while the tracks are elevated. Selecting the SmartBoom mode with the tracks elevated could result in a sudden drop of the machine which could result in serious injury or death.

WARNING

If any SmartBoom mode is active and the boom control joystick is in the BOOM DOWN position (forward) with a bucket or a work tool on the ground, pressing the disable button that is located on the front of the right hand joystick could cause a sudden boom down motion. This control function could lift the machine upward, with unexpected machine movement that could result in serious injury or death. Do not press the disable button while the SmartBoom mode is active and the boom control joystick is in the BOOM DOWN position (forward) with a bucket or a work tool on the ground.

WARNING

Do not attempt to lift the tracks of the machine by using the disable button and applying downward force with the boom lowering control while the machine is in any SmartBoom mode. Releasing the disable button will immediately return the machine to the active SmartBoom mode. This action could cause the machine to drop down abruptly which could result in serious injury or death.

The Caterpillar SmartBoom provides significant advantages in the following operations:

Excavation and Loading

The operator should select the SmartBoom UP AND DOWN mode for excavating operations and for loading operations. This mode is effective during the return cycle. The BOOM DOWN movement is assisted by gravity, and the pump flow that is normally required for the boom circuit is available for faster STICK OUT and SWING functions. More work is performed for the amount of hydraulic oil flow that is provided by the pumps. This results in faster cycle times and improved fuel efficiency.

When the SmartBoom UP AND DOWN mode is active, no downward hydraulic force is applied to the boom. The operator can intermittently apply downward hydraulic force when the force is required for bucket penetration. A button on the right joystick enables the operator to override the SmartBoom mode.

Hammering

The operator should select the SmartBoom DOWN mode for hammering operations. In the SmartBoom DOWN mode, the weight of the hammer plus the boom and the stick provides sufficient downward force for effective hammering. This mode prevents the hammer from rebounding. The boom follows the hammer downward freely as the tool penetrates the rock. This mode also reduces strain on the machine structures.

Advantages

In hammering, the SmartBoom provides the following advantages:

- The mode reduces shock in the cab.
- The mode reduces strain on machine structures.
- The mode prevents blank shots.
- The mode maintains optimum frequency.

In rock cleaning, the SmartBoom provides the following advantages:

- The mode reduces strain on machine structures.

- The mode reduces wear on the bucket and the teeth.
- The mode maintains optimum frequency.

In a leveling operation, the SmartBoom eases the operation. Only STICK IN actuation and bucket actuation are required to level the surface.

In material handling, the SmartBoom reduces the chance of damage below the material.

i06978374

Bucket - Remove and Install

SMCS Code: 6001-011; 6001; 6001-012; 6101; 6102; 6523

Removal Procedure

WARNING

Failure to follow the instruction below for the installation of a work tool may result in personal injury or death. Special care must be taken if more than one person is installing the work tool.

- **Confirm the verbal communication and the hand signals that will be used during the installation.**
- **Be alert for sudden movement of the front linkage and the work tool.**
- **Do not insert fingers into the bores of the support pins when the support pins and the bores are being aligned.**

NOTICE
To facilitate removal of the bucket pins without causing damage to the pins, the bearings, and/or the O-ring seals put the bucket on the floor and the stick in a vertical position, as shown.

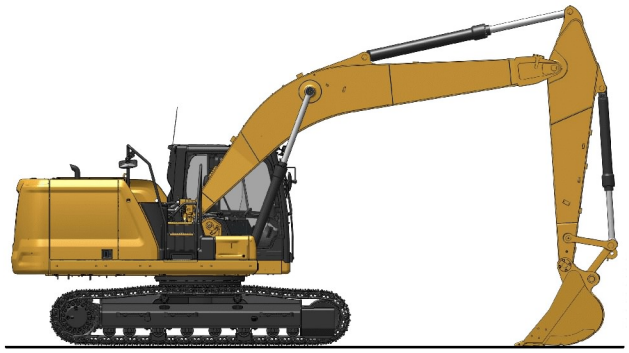

Illustration 533 g06181120

1. Start the engine. Park the machine on a hard, level surface. Position the bucket, the stick, and the bucket control linkage, as shown. Shut off the engine.

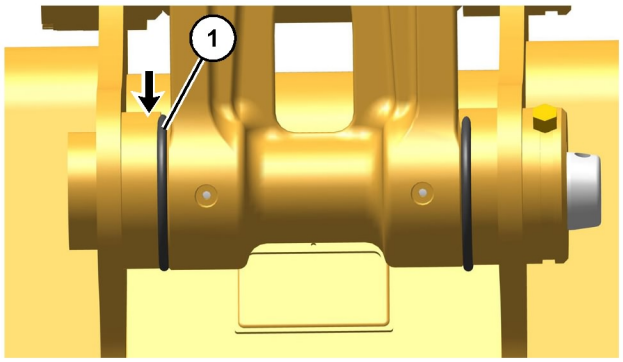

Illustration 534 g06192508

2. Slide O-ring seals (1) off the pin joints and onto the flanges of the bucket.

WARNING

When the pin assembly is removed, the linkage assembly may swing out of the bucket. To prevent possible personal injury, do not stand in front of the linkage assembly when the pin assembly is being removed.

Note: Removing the support pin may be difficult due to excessive pressure on the support pin. Remove the pressure on the support pin by adjusting the front linkage.

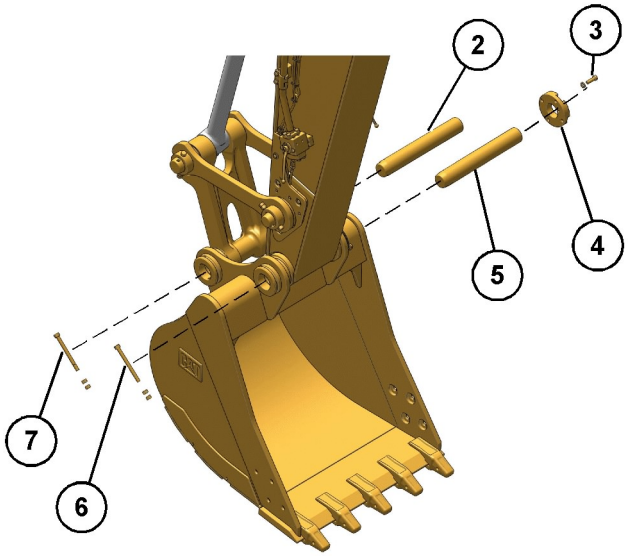

Illustration 535 g06186090

3. Remove nuts and retaining bolt (7) from support pin (2). Remove the support pin .
4. Remove bolts (3) and adapter plate (4). Remove the shims.
5. Remove nuts and retaining bolt (6) from support pin (5). Remove the support pin.
6. Start the engine and raise the stick out of the bucket.
7. Remove the O-ring seals (1) from the flanges on the bucket.

Note: After the support pins have been removed, make sure that the support pins do not become contaminated with sand or dirt. Make sure that the seals on the end of the stick and the seals on the end of the link do not become damaged.

Installation Procedure

1. Clean each pin and each pin bore. Lubricate each pin bore with molybdenum grease.

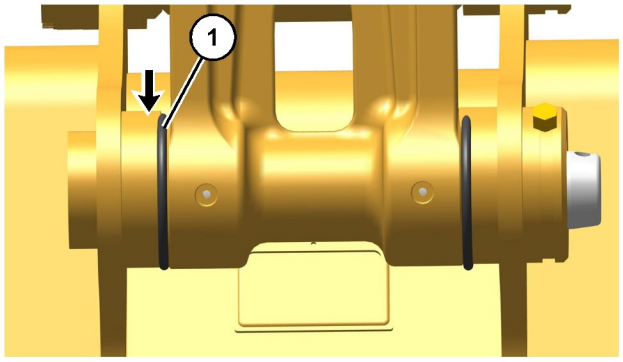

Illustration 536 g06192508

2. Position the O-ring seals (1) onto the flanges of the bucket.
3. Start the engine and lower the stick into the bucket until the pin bores are in alignment with each other. Stop the engine.

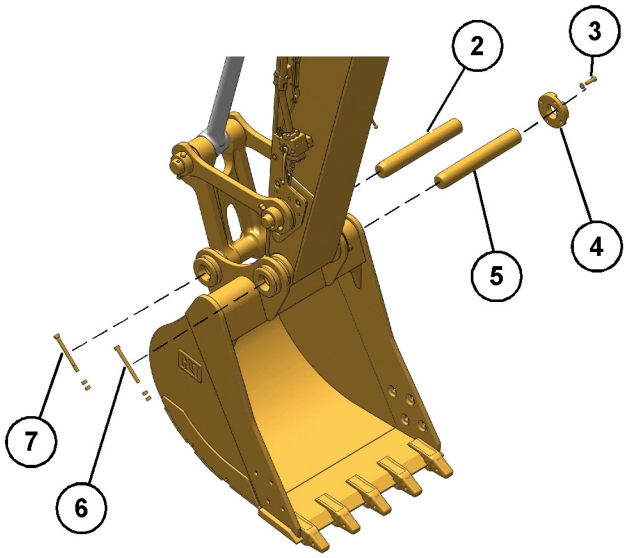

Illustration 537 g06186090

4. Install support pin (5). Align the retaining bolt hole in the support pin with the retaining bolt hole in the bucket.
5. Install the retaining bolt and nuts (6). Install adapter plate (4) without the shims, and without bolts (3) that hold the adapter plate.
6. Refer to Operation and Maintenance Manual, “Bucket Linkage - Inspect/Adjust” to adjust the bucket clearance.
7. Slide O-ring seals (1) in position over the pin joints between the bucket and the stick.

8. Start the engine and position the bucket linkage into the bucket until the pin bores are in alignment with each other. Stop the engine.

9. Install support pin (2). Align the retaining bolt hole in the bucket pin with the retaining bolt hole in the bucket.

10. Install retaining bolt and nuts (7).

11. Slide the O-ring seals (1) over the pin joints between the bucket and the link assembly.

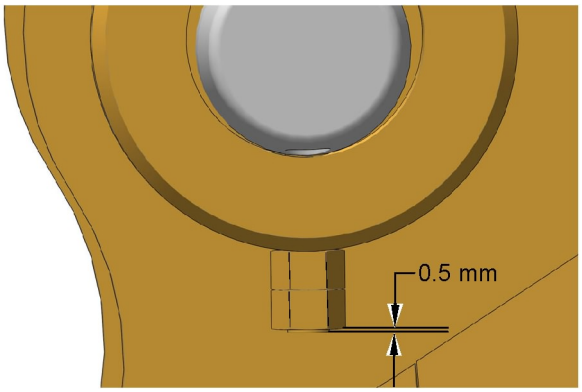

Illustration 538 g06192530

12. Tighten retaining nuts (6) and (7). Position the outside nut even with the end of the retaining bolt or 0.5 mm (0.02 inch) beyond the end of the retaining bolt. Tighten the inside nut against the outside nut.

13. Lubricate the bucket pins. Refer to Operation and Maintenance Manual, “Bucket Linkage - Lubricate”.

i07757775

Quick Coupler Operation
(Circuit for CW Coupler (If Equipped))

SMCS Code: 6129; 6522; 7000

NOTICE
The Cat Quick Coupler (CW Coupler) is not designed to be used in applications where there is long exposure to excessive vibration. The vibration caused by extensive use of a hydraulic hammer as well as the added weight of certain demolition tools such as shears, crushers, and pulverizers may cause premature wear and decreased service life of the coupler.

Be sure to carefully inspect the coupler daily for cracks, bent components, wear, distressed welds, etc. when operating with any of the above work tools.

General Operation

The quick coupler is used to change work tools while the operator remains in the cab. The quick coupler can be used with a broad range of buckets and work tools. Each work tool must have a set of pins in order for the quick coupler to work properly.

The work tools are held onto the quick coupler by hydraulic pressure. If pressure is lost, a locking bar keeps the work tool locked with the force of built-in springs. Ensure that the hydraulic system and the blocking bar are working properly before using the quick coupler.

A lifting eye is included on the quick coupler. Release the work tool from the quick coupler to use the lifting eye to pick up loads. To lift a load with the lifting eye, extend the bucket cylinder until the quick coupler is in a VERTICAL position. Do not exceed the rated load for the machine.

NOTICE

Once the work tool has been properly attached to the coupler, no loosening of the work tool should occur. Refer to the “Quick Coupler Installation and Removal” section of the quick coupler Operation and Maintenance Manual for additional information. If at any point after the proper attachment and back drag testing of the work tool, should the work tool then become loose or if the rear pin of the work tool detaches from the movable hook, stop work immediately and safely ground and detach the work tool. Consult your Cat dealer to inspect the coupler prior to putting the coupler back into service. This situation could indicate potential coupler damage that may not be readily visible to the customer or operator of the machine and coupler.

Electric Switch Operation

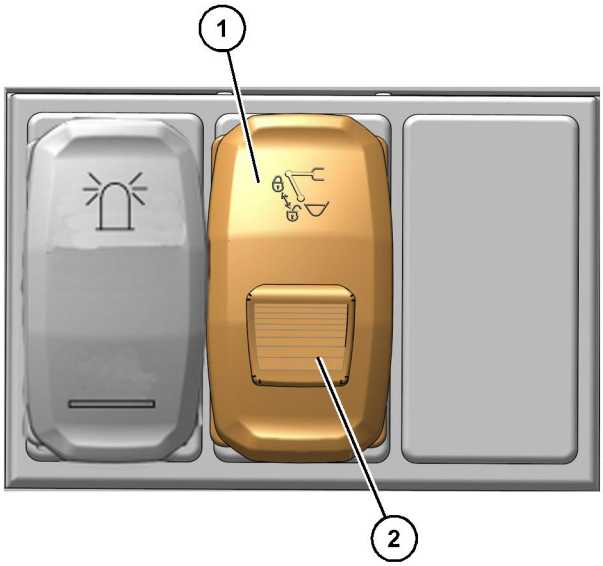

Illustration 539 g06184557

Quick coupler switch (1) is located inside the cab on the switch panel to the left of the operator's seat. The electric switch has only one position for coupling the work tool and uncoupling the work tool. The switch is equipped with a safety lock (2). The locking tab must be pushed forward before the switch can be pressed.

Coupling the Work Tool

WARNING

Inspect the coupler wedge engagement before you operate the excavator.

Serious injury or death may result from an improperly engaged coupler.

Inspect coupler wedge engagement from the cab by rotating the bucket or the work tool inward. Extend the bucket cylinder to bring the coupler actuator into view and bring the stick in until the wedges are visible.

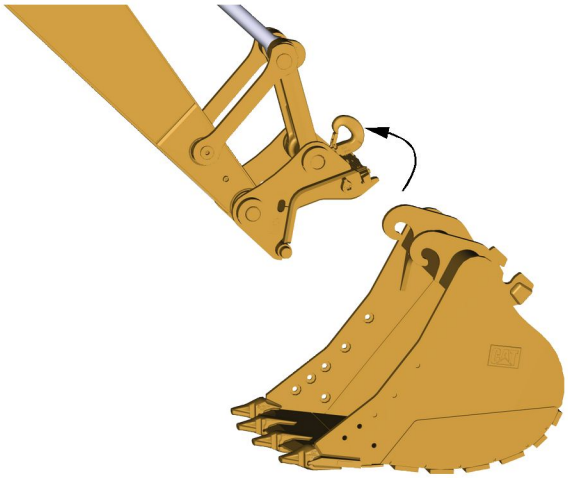

Illustration 540 g06220881

1. Position the work tool on a level surface.
2. Retract the bucket cylinder. Position the quick coupler in alignment between the hinges of the work tool.

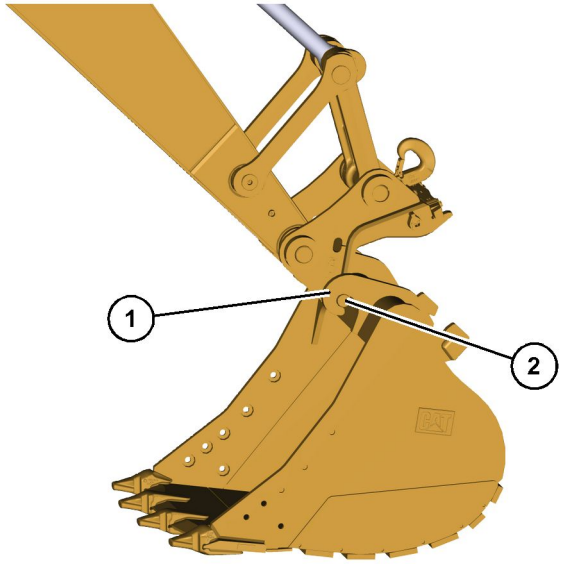

Illustration 541 g06220883

(1) Hinges
(2) Lower bosses

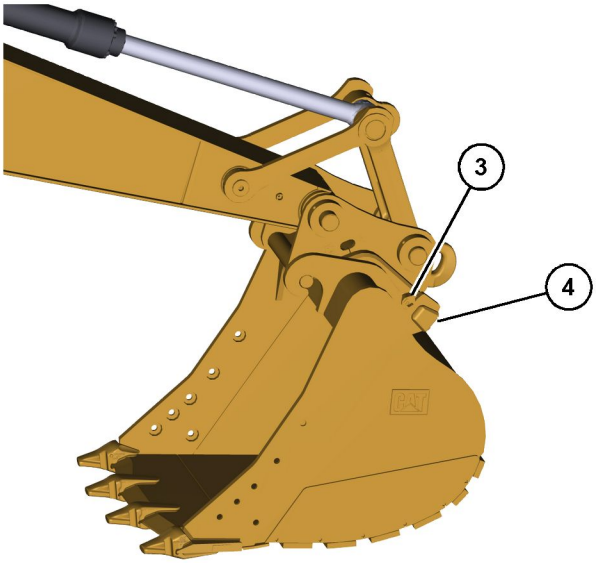

Illustration 542 g06220887

(3) Center bosses
(4) Locking area

3. Move the stick forward and raise the stick until the lower bosses (2) engage the hinges (1) of the work tool.

4. There are two possible settings for locking the quick coupler in Cat ET, "Alarm" and "Hold to Run". For the "Hold to Run" setting, push the locking tab on the switch forward and then depress and hold the rear of the switch until the quick coupler engages the work tool. The message “Quick Coupler Locking” will display on the monitor. For the "Alarm" setting, push the locking tab on the switch forward and then depress, but do not hold, the rear of the switch until the quick coupler engages the work tool. The message “Quick Coupler Locking” will display on the monitor.

5. Extend the bucket cylinder to rotate the quick coupler toward the work tool.

Center bosses (3) must engage with the cutout of the hinge.

6. Release the quick coupler switch to lock the work tool.

The springs in the quick coupler will move the wedge into the locking area (4).

The monitor will display the message “Verify Tool Locking” .

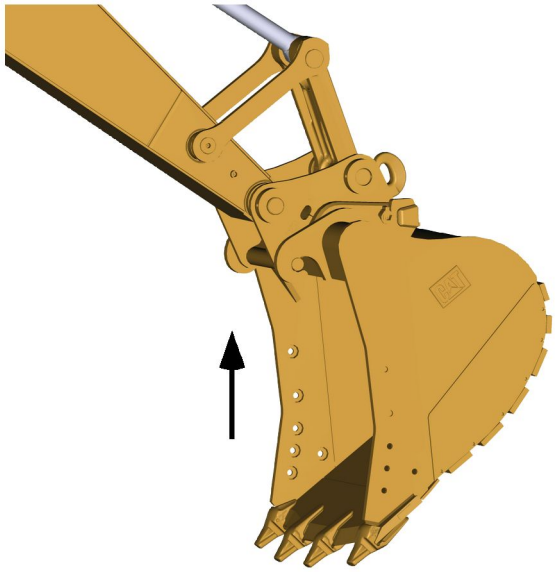

Illustration 543 g06220888

7. Raise the boom or raise the stick. Retract the bucket cylinder to confirm that the wedge is fully engaged. If the wedge is fully engaged, the work tool is locked in place. The work tool is ready to use.

Uncoupling the Work Tool

WARNING

Place the work tool or bucket in a safe position before disengaging the coupler. Disengaging the coupler will release the work tool or bucket from control of the operator.

Serious injury or death may result from disengaging the work tool or bucket when it is in an unstable position or carrying a load.

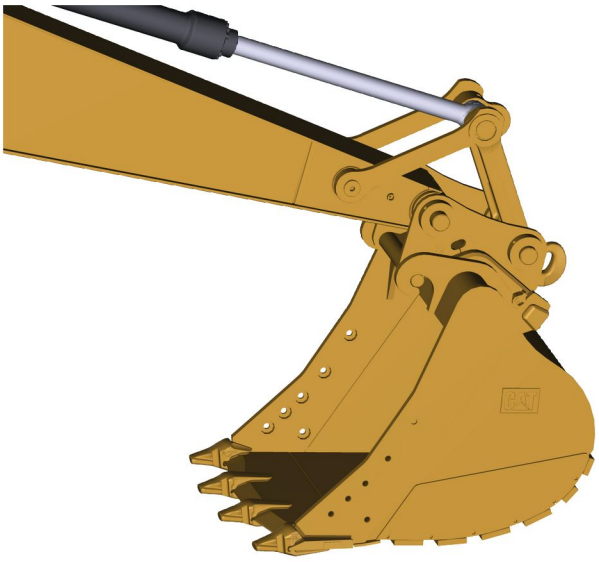

Illustration 544 g06220889

1. Level the bucket or level the work tool on the ground.
2. Push the locking tab on the switch forward and then depress the rear of the switch until the quick coupler releases the work tool. The message “Quick Coupler Unlock” will display on the monitor. For the "Alarm" setting, push the locking tab on the switch forward and then depress, but do not hold, the rear of the switch until the quick coupler engages the work tool. The message “Quick Coupler Locking” will display on the monitor.

Illustration 545 g06220891

3. Retract the bucket cylinder to move the quick coupler toward the machine.

4. Release the quick coupler switch to retract the wedge.

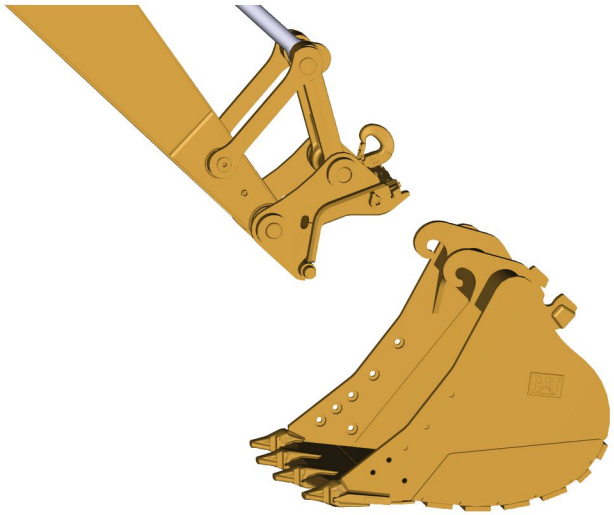

Illustration 546 g06220892

5. Lower the stick and move the stick toward the machine to disengage the quick coupler.

i07852525

Quick Coupler Operation
(Hydraulic Pin Grabber Quick Coupler (If Equipped))

SMCS Code: 6129; 6522; 7000

NOTICE
The Cat Quick Coupler (Hydraulic Pin Grabber) is not designed to be used in applications where there is long exposure to excessive vibration. The vibration caused by extensive use of a hydraulic hammer as well as the added weight of certain demolition tools such as shears, crushers, and pulverizers may cause premature wear and decreased service life of the coupler.

Be sure to carefully inspect the coupler daily for cracks, bent components, wear, distressed welds, etc. when operating with any of the above work tools.

General Operation

The quick coupler is used to change work tools while the operator remains in the cab. The quick coupler can be used with a broad range of buckets and work tools. Each work tool must have a set of pins in order for the quick coupler to work properly.

The work tools are held onto the quick coupler by hydraulic pressure. If pressure is lost, a check valve in the hydraulic cylinder traps oil in the cylinder. Ensure that the hydraulic system is working properly before using the quick coupler.

A lifting eye is included on the quick coupler. Release the work tool from the quick coupler to use the lifting eye to pick up loads. To lift a load with the lifting eye, extend the bucket cylinder until the quick coupler is in a VERTICAL position. Do not exceed the rated load for the machine.

NOTICE

Once the work tool has been properly attached to the coupler, no loosening of the work tool should occur. Refer to the “Quick Coupler Installation and Removal” section of the quick coupler Operation and Maintenance Manual for additional information. If at any point after the proper attachment and back drag testing of the work tool, should the work tool then become loose or if the rear pin of the work tool detaches from the movable hook, stop work immediately and safely ground and detach the work tool. Consult your Cat dealer to inspect the coupler prior to putting the coupler back into service. This situation could indicate potential coupler damage that may not be readily visible to the customer or operator of the machine and coupler.

Quick Coupler Operation

Electric Switch Operation

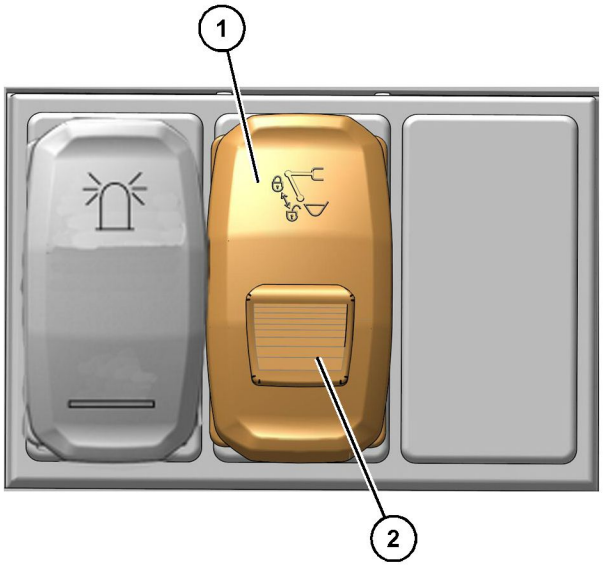

Illustration 547 g06184557

Quick coupler switch (1) is located inside the cab on the switch panel to the left of the operator's seat. The electric switch has only one position for coupling the work tool and uncoupling the work tool. The switch is equipped with safety lock (2). The locking tab must be pushed forward before the switch can be pressed.

Coupling the Work Tool

WARNING

Place the work tool or bucket in a safe position before engaging the quick coupler. Ensure that the work tool or bucket is not carrying a load.

Serious injury or death may result from engaging the work tool or bucket when it is in an unstable position or carrying a load.

WARNING

Inspect the quick coupler engagement before operating the machine.

Serious injury or death may result from improperly engaged coupler.

WARNING

Crush injury. Could cause serious injury or death. Always confirm that the quick coupler is engaged onto the pins. Read the Operator's Manual.

WARNING

The alarm will go off when the coupler is locked and the monitor will display a message. These assurances do not confirm that the coupler pins are engaged. A physical test is required by dragging the attachment on the ground to confirm the coupler pins are engaged.

NOTICE
With certain work tool combinations, including quick couplers, the work tool can hit the cab or the front of the machine. Always check for interference when first operating a new work tool.

1. Position the bucket or the work tool on a level surface.
2. Make sure that the pins are in the bucket or the work tool. Make sure that the pin keepers are installed correctly.

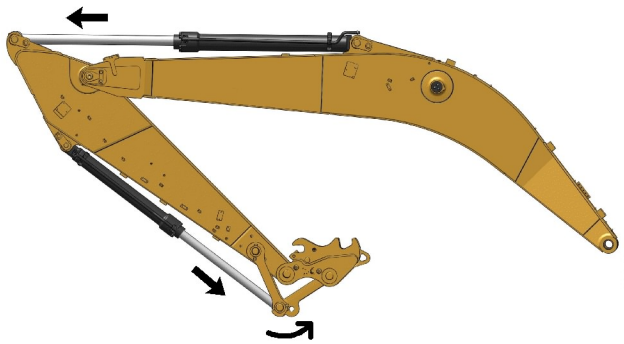

Illustration 548 g06187057

3. Extend the stick cylinder and fully extend the bucket cylinder until the quick coupler is curled past a vertical position. This action must be performed before pressing the switch.

Illustration 549 g06300078

4. Push the lock mechanism on the switch forward and then depress the rear of the switch. The alarm will sound continuously and the message “Quick Coupler Unlock” will display on the monitor.
5. Hold the control lever for the bucket cylinder in the EXTEND position for 5 seconds to unlock the hook.

Illustration 550 g06187063

6. Align the quick coupler with the work tool.

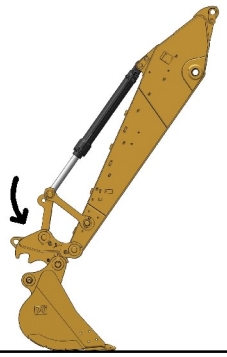

Illustration 551 g06187068

7. Rotate the quick coupler to grab the top pin.

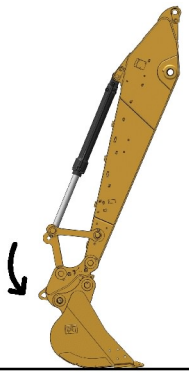

Illustration 552 g06187086

8. Rotate the quick coupler downward to grab the bottom pin.

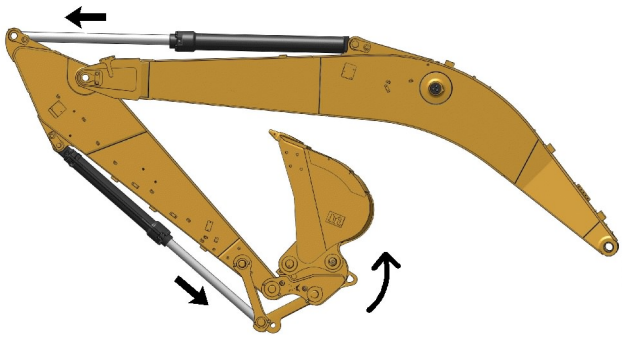

Illustration 553 g06187108

9. Extend the stick cylinder and extend the bucket cylinder until the work tool is curled past a vertical position.

Illustration 554 g06300088

10. Push the lock mechanism on the switch forward and then depress the rear of the switch. The alarm will sound continuously and the message “Quick Coupler Locking” will display on the monitor.

11. Hold the control lever for the bucket cylinder in the EXTEND position for 5 seconds to lock the hook. The monitor will display the message “Verify Tool Locking” and the alarm will stop.

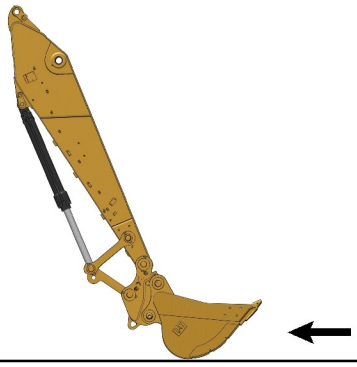

Illustration 555 g06187115

WARNING

Inspect the quick coupler engagement before operating the machine.

Verify that the quick coupler is engaged per the procedure in the Operation and Maintenance Manual. Verify prior to operating the machine, after every engine start, and after an extended time of inactivity.

Serious injury or death may result from improperly engaged coupler.

12. Verify that the quick coupler and the work tool are locked together.

a. Retract the bucket cylinder and place the work tool on the ground.

b. Apply pressure to the work tool against the ground.

NOTICE
Back drag the work tool on the ground to ensure the quick coupler is properly locked.

Do Not strike the work tool on the ground to ensure the quick coupler is properly locked. Striking the work tool on the ground will result in damage to the coupler cylinder.

c. Drag the work tool backward.

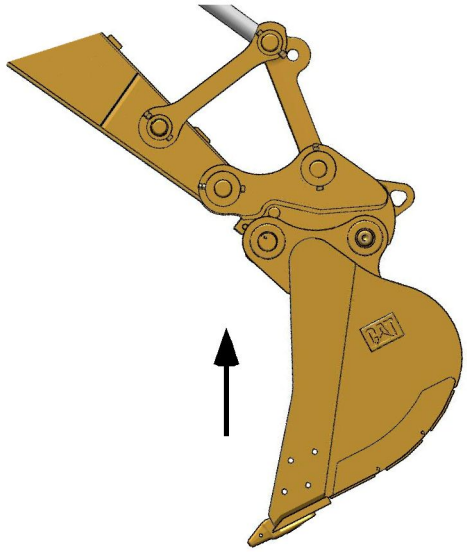

Illustration 556 g06458083

13. Raise the boom or raise the stick. Retract the bucket cylinder to confirm that the coupler is fully engaged. If the coupler is fully engaged, the work tool is locked in place. The work tool is ready to use.

Uncoupling the Work Tool

WARNING

Place the work tool or bucket in a safe position before disengaging the coupler. Disengaging the coupler will release the work tool or bucket from control of the operator.

Serious injury or death may result from disengaging the work tool or bucket when it is in an unstable position or carrying a load.

NOTICE
Auxiliary hoses for work tools must be disconnected before the Hydraulic Quick Coupler is disengaged.

Pulling the work tool with the auxiliary hoses could result in damage to the host machine or the work tool.

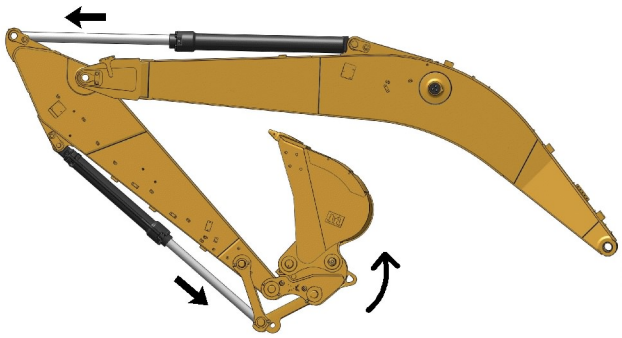

Illustration 557 g06187108

1. Extend the stick cylinder and fully extend the bucket cylinder until the work tool is curled past a vertical position. This action must be performed before pressing the switch.

2. Push the lock mechanism on the switch forward and then depress the rear of the switch to unlock the work tool. The alarm will sound continuously and the message “Quick Coupler Unlock” will display on the monitor.

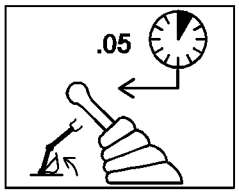

Illustration 558 g01231447

3. Hold the control lever for the bucket cylinder in the EXTEND position for 5 seconds to unlock the hook.

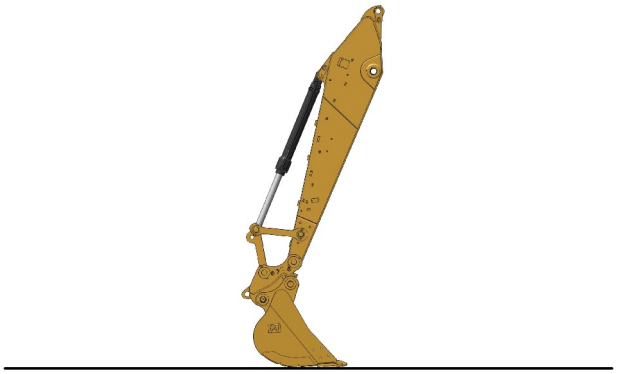

Illustration 559 g06187142

4. Move the boom and the stick until the tool or the bucket is in the storage position. Keep the tool close to the ground.

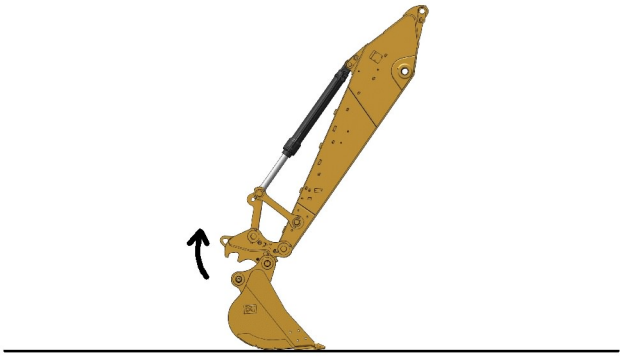

Illustration 560 g06187151

5. Rotate the quick coupler upward to release the bottom pin.

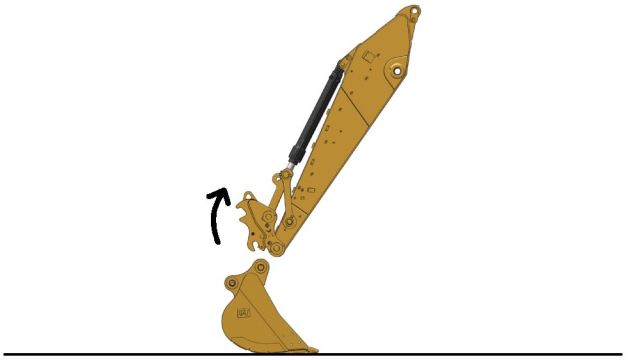

Illustration 561 g06187156

6. Continue to rotate the quick coupler upward to release the top pin and completely release the work tool from the quick coupler.

7. Move the stick to a position that is clear of the work tool.

Note: To lift objects with the lifting eye of the quick coupler, refer to “Coupler Lifting Eye Operation without Bucket” later in this chapter.

Coupling a Bucket that is Reversed

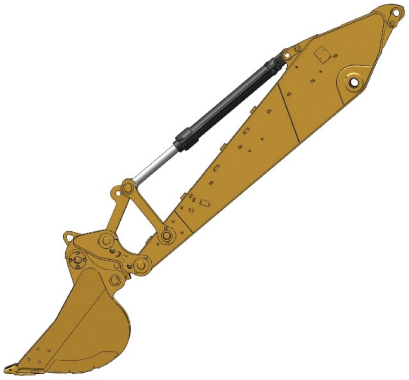

Illustration 562 g06187159

1. When you use a hydraulic pin grabber quick coupler, you can connect to a bucket that is in a reversed position. Refer to Illustration 562 for an example of connecting to a bucket that is in a reversed position.

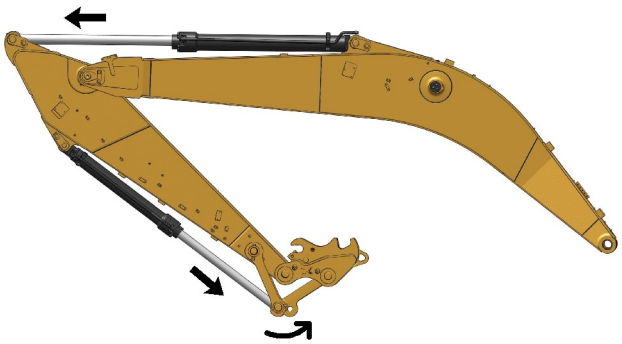

Illustration 563 g06187057

2. Extend the stick cylinder and fully extend the bucket cylinder until the quick coupler is curled past a vertical position. This action must be performed before pressing the switch.

3. Follow the same steps for coupling the work tool to couple the host machine to a bucket that is reversed. Refer to “Coupling the Work Tool” for the proper procedure.

NOTICE

When some Caterpillar buckets are used in the reverse position, it can be more difficult to couple the bucket and uncouple the bucket than in the normal position.

Care must be taken to ensure that the position of the boom, stick, and bucket are aligned to ensure smooth coupling. The coupler must be in position between the bucket bosses.

If the bucket is not fully engaged in the jaw of the coupler, the quick coupler can become snagged on the bucket bosses. The full weight of the bucket is then carried by the quick coupler sideplates, which can cause damage to the quick coupler.

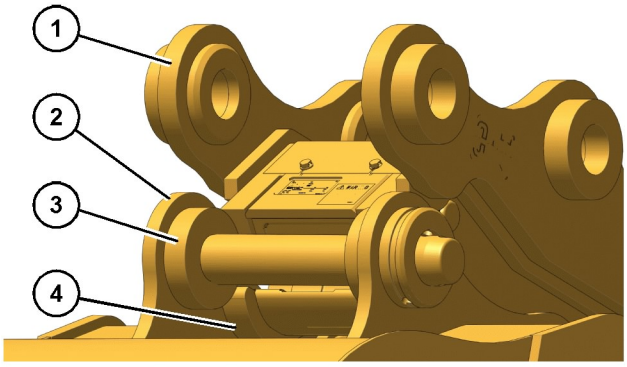

Illustration 564 g06187418

(1) Quick coupler
(2) Bucket
(3) Boss
(4) Hook

Coupler Lifting Eye Operation without Bucket

1. Remove the work tool. Refer to “Uncoupling the Work Tool” for the proper procedure.

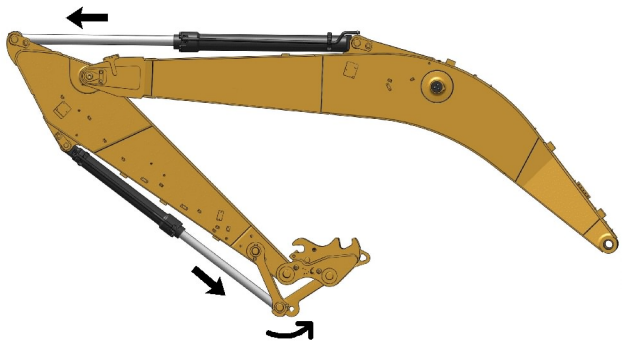

Illustration 565 g06187057

2. The quick coupler must be curled past a vertical position before depressing the switch. Extend the stick cylinder and fully extend the bucket cylinder until the quick coupler is curled past a vertical position.

Illustration 566 g06300088

3. Push the lock mechanism on the switch forward and then depress the rear of the switch to lock the quick coupler. The alarm will sound continuously and the message “Quick Coupler Locking” will display on the monitor.

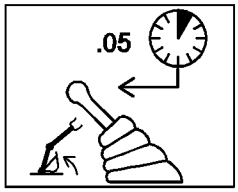

Illustration 567 g01231447

4. Hold the control lever for the bucket cylinder in the EXTEND position for 5 seconds to lock the hook. The monitor will display the message “Verify Tool Locking” and the alarm will stop.

Illustration 568 g06187164

5. Rotate the quick coupler downward and move the stick to a position that is clear of the work tool.

Illustration 569 g06223888

6. Use the lifting eye of the quick coupler, as needed.

7. To reinstall the bucket or the work tool, refer to “Coupling the Work Tool” for the proper procedure.

i07349163

Work Tool Operation
(If Equipped)

SMCS Code: 6700; 7000

Hammer Operation (If Equipped)

Illustration 570 g06222793

NOTICE
Use only a hydraulic hammer that is recommended by Caterpillar.

The use of a hydraulic hammer that is not recommended by Caterpillar could result in structural damage to the host machine.

Consult your Cat dealer for information on recommended hydraulic hammers.

Only use the hydraulic hammer to break rocks, concrete, and other hard objects. Before you start hydraulic hammer operation, place the machine on a level, stable surface.

Before you start hydraulic hammer operation, close the front window. Caterpillar recommends the installation of a window guard on the front window for protection from flying debris.

NOTICE
In order to avoid structural damage to the host machine or the hydraulic hammer, comply with the following:

Do not attempt to break rocks or concrete by burying the hammer tool completely into the rocks or concrete.

Do not apply a prying force to the hammer tool in order to remove the hammer tool from the material.

Do not allow the hydraulic hammer to operate at one location and for more than 15 seconds. Change the location of the hydraulic hammer and repeat the procedure. Failure to change the location of the hydraulic hammer could cause the hydraulic oil to overheat. Overheated hydraulic oil could damage the accumulator.

Stop the hydraulic hammer immediately if the jumper lines are pulsating violently. This indicates that the accumulator nitrogen charge is lost. Consult your Cat dealer for the necessary repair.

NOTICE
Do not use the dropping force of the hydraulic hammer to break rocks or other hard objects. This could cause structural damage to the machine.

Do not use the sides or back of the hydraulic hammer to move rocks or other hard objects. Doing this could cause damage not only to the hammer but to stick or boom cylinder.

Do not operate the hydraulic hammer with any of the cylinders fully retracted or extended. Doing this could cause structural damage to the machine, resulting in reduced machine life.

Do not use the hydraulic hammer to lift an object.

Do not operate the hydraulic hammer while the stick is vertical to the ground. This could allow the stick cylinder to vibrate excessively.

Operate the attachment control levers carefully to keep the hydraulic hammer tool from hitting the boom.

Do not operate the hydraulic hammer under water unless the hydraulic hammer is properly equipped. Operating the hydraulic hammer under water could damage the machine hydraulic system. Consult your Cat dealer for information on underwater operation.

Do not operate the hydraulic hammer with the upper structure sideways to the undercarriage. Before you start hydraulic hammer operation, place the upper structure in the recommended positions that are shown in illustration 571 . Any other operating positions could make the machine unstable. Any other operating positions could place excessive loads on the undercarriage.

Refer to the following for any additional questions about the operation and care of your Cat hydraulic hammer:

- Operation and Maintenance Manual, SEBU7346, “Hydraulic Hammers”
- The Operation and Maintenance Manual specific to your machine

An operation and maintenance decal, SMEU7397, is available for all hydraulic hammers. The decal provides procedures for operation and maintenance of the hydraulic hammers. The decal can be placed on the machine or the hammer. The decal can be obtained through the normal literature ordering channels.

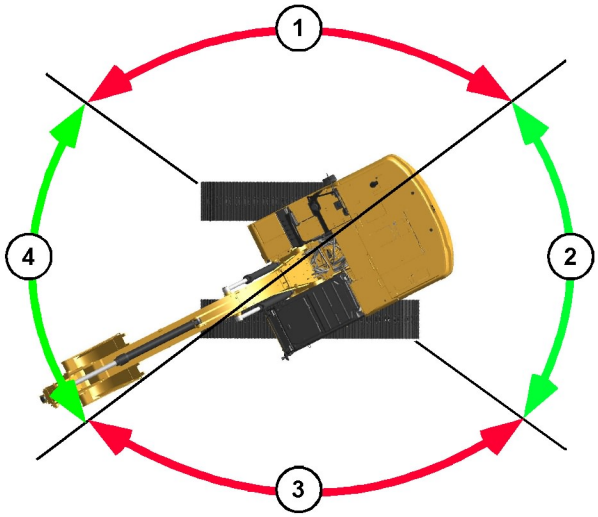

Illustration 571 g06192837

(1) Incorrect working position
(2) Correct working position
(3) Incorrect working position
(4) Correct working position

Shear Operation (If Equipped)

Illustration 572 g06222798

WARNING

Do not operate or work on this work tool unless you have read and understand the instructions and warnings in the Operation And Maintenance Manual for both the work tool and the host machine.

Failure to follow the instructions or heed the warnings could result in injury or death.

Contact your Caterpillar dealer for replacement manuals. Proper care is your responsibility.

NOTICE

Selection of a hydraulic shear must be done with extra care.

Use of a hydraulic shear not recommended by Caterpillar could result in structural damage to the host machine.

Consult your Cat dealer for hydraulic shear information.

WARNING

Serious injury or death could occur from the demolition of pipes, vessels, tanks or other containers that may contain gas, flammable materials or hazardous chemicals.

Do not perform any demolition work on these items until all of their contents have been removed.

Follow all regulations for the removal and disposal of these materials.

NOTICE

Using the demolition tool to level the work site or push over standing structures may damage the machine or the demolition tool. Use appropriate equipment to do site preparation or maintenance operations.

NOTICE

To avoid structural damage to the machine, do not break road surfaces by placing the cutting edge of the hydraulic shear on the ground and moving the machine.

Be sure that no one is near the work tool to prevent injury. Keep the work tool under control at all times to prevent injury. When a demolition tool is used, all personnel must maintain a minimum distance of 10 m (33 ft).

Close all windows. Make sure that all required guards are in place. Wear all required protective equipment. Follow the instructions in the Operation and Maintenance Manual for the work tool.

Crusher Operation (If Equipped)

WARNING

Improper operation and maintenance of the crusher could cause personal injury or death. Observe the following procedures for safe operation of the crusher.

Consult your Cat dealer for more information on the operation and maintenance of the crusher.

Do not operate the host machine with the work tool unless you have read and understood the instructions and warnings in the Operation and Maintenance Manual. Failure to follow the instructions or heed the warnings could result in machine or work tool damage, and/or serious injury or death. Contact your Cat dealer for a replacement manual, if needed.

When the crusher is installed on the host machine, always make sure that the protective guarding is in place.

Using the crusher in an incorrect manner can damage the machine and/or cause personal injury or death.

Always ensure that the work area is clear of ground personnel, due to the potential crush hazards with falling debris and machine movement.

Resting or placing your foot on the work tool pedal could result in unexpected movement of the machine / work tool which could result in personal injury or death. Always lock the crusher when not in use.

NOTICE

Selection of a hydraulic crusher must be done with extra care.

Use of a hydraulic crusher not recommended by Caterpillar could result in structural damage to the host machine.

Consult your Cat dealer for hydraulic crusher information.

Close all windows. Make sure that all required guards are in place. Wear all required protective equipment. Follow the instructions in the Operation and Maintenance Manual for the work tool.

Illustration 573 g06222800

Demolition work on the roof of a building could lead to serious personal injury if the building were to collapse and the excavator turned over or fell off the roof. The demolition work must be started ONLY AFTER surveying the building for its structural integrity.

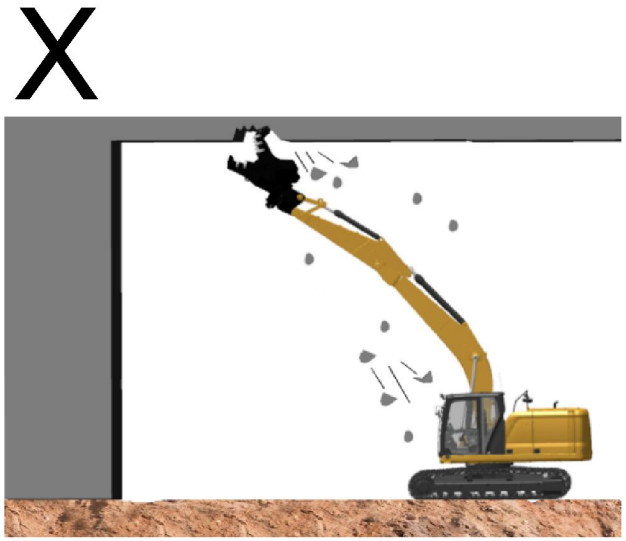

Illustration 574 g06222803

Crushing work above your head must be avoided because objects can fall and damage the machine.

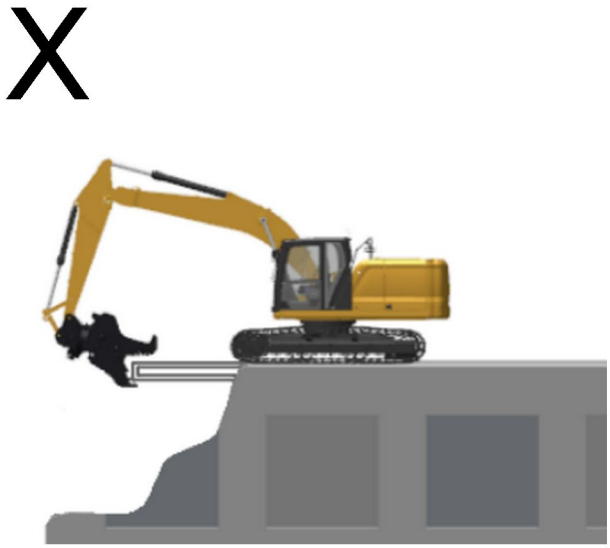

Illustration 575 g06222806

Do not perform demolition work at the base of the machine, because the ground could be unstable and cause the machine to fall.

Illustration 576 g06222809

Do not suddenly lower or stop the work tool, otherwise the excavator could turn over.

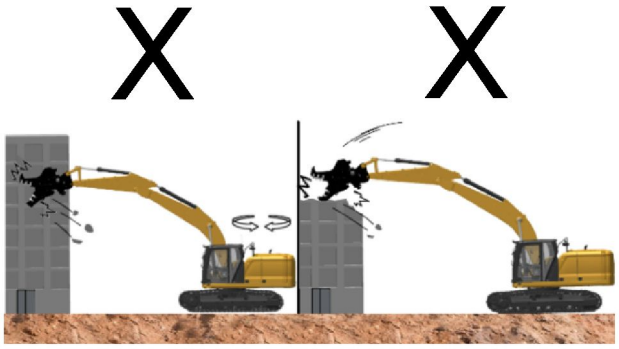

Illustration 577 g06222813

Crushing work using impact, swing, or dropping forces of the excavator could cause damages to the machine and also could lead to personal injury. As such, NEVER perform such an operation.

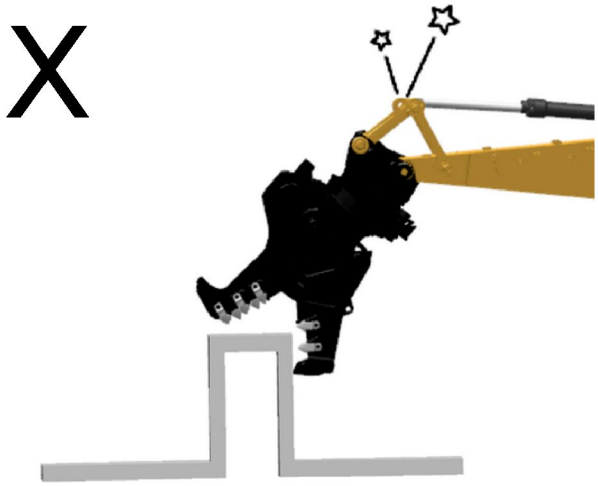

Illustration 578 g06222817

Crushing work with hydraulic cylinder at stroke end position could damage the excavator, resulting in shortening of lifespan. Also, as it could lead to unexpected personal injury due to breakage of the machine, do not perform any work at stroke end.

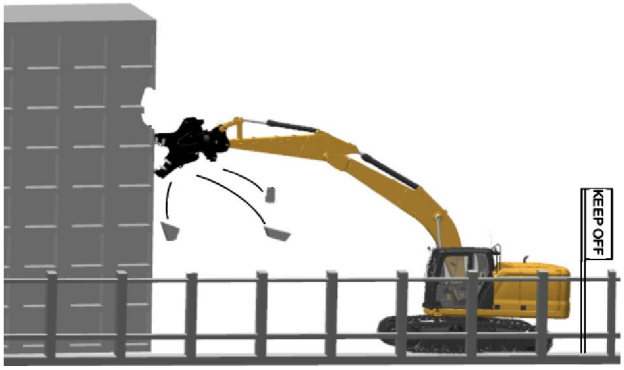

Illustration 579 g06222821

When performing work at elevated positions, always use care for the surroundings as well as for falling objects to avoid personal injury. Use guide personnel and signs as required.

Illustration 580 g06222829

When working sideways, the track can lift. Avoid abrupt operation and operate slowly.

Illustration 581 g06222831

Crushers could interfere with the boom and the cab depending on the type and method of usage. Know the working range of the crusher being used.

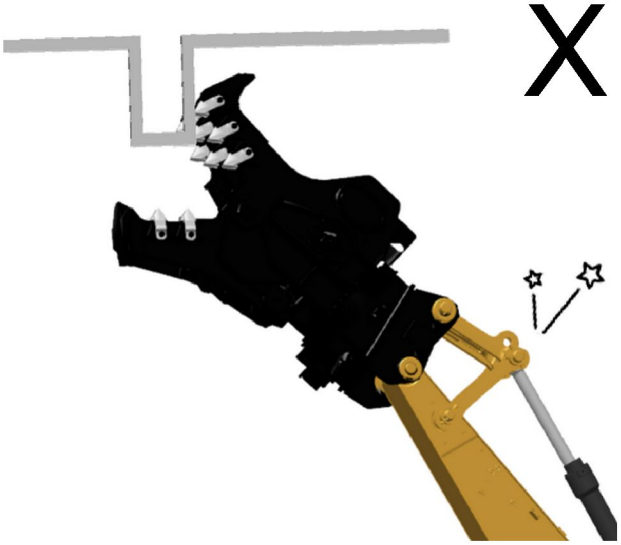

Illustration 582 g06222833

If the tooth of the crusher engages an object at a slant, excessive forces could be applied to the front regions. As such move the crusher to the front.

Illustration 583 g06222836

Never extend the boom cylinder suddenly. Sudden extension of the boom could cause tip backwards.

Illustration 584 g06222831

Sudden extension of the bucket cylinder, or sudden extension of the stick cylinder could cause damages at the stroke end position, resulting in personal injury. Operations that cause sudden extension of the cylinders is PROHIBITED!

Parking

i07868085

Stopping the Machine

SMCS Code: 7000

WARNING

Leaving the machine unattended when the engine is running may result in personal injury or death. Before leaving the machine operator station, neutralize the travel controls, lower the work tools to the ground and deactivate all work tools, and place the lever for the hydraulic lockout control in the LOCKED position.

Note: There may be regulations that define the requirements for the operator and/or support personnel to be present when the engine is running.

Park on a level surface. If the machine must be parked on a grade, chock the tracks securely.

Note: The swing parking brake is automatically applied when the machine is stopped. The swing parking brake is released when the engine is running and the joystick is activated.

1. Turn the engine speed dial counterclockwise to reduce engine speed.

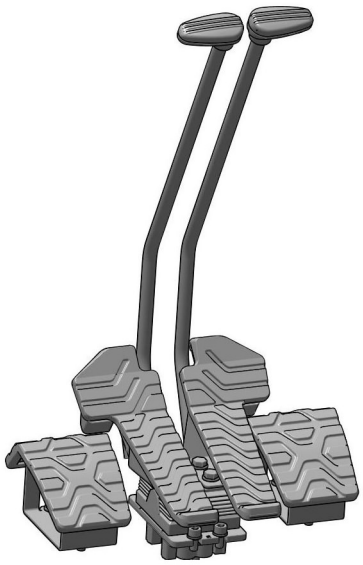

Illustration 585 g06181402

2. Release the travel levers/pedals to stop the machine.
3. Lower the work tool to the ground. Apply a slight downward pressure.
4. Move the hydraulic lockout control to the LOCKED position.

i07088536

Freezing Conditions

SMCS Code: 7000

If freezing temperatures are expected, remove the mud and the dirt from each track roller frame. Park the machine on wood planks. Use the following procedure to clean each track roller frame.

Illustration 586 g06188791

1. Position the boom over one side of the machine.
2. Use boom down pressure to lift the track on one side off the ground. Operate the track in the forward direction. Then operate the track in reverse. Continue this procedure until the maximum amount of material is thrown off the track.
3. Lower the track onto the wood planks.
4. Repeat the procedure for the other track.
5. Clean the area around the carrier rollers and around the track rollers.
6. Lower the work tool onto a wood plank to prevent the work tool from touching the ground.

i07915139

Stopping the Engine

SMCS Code: 1000; 7000

NOTICE
Stopping the engine immediately after it has been working under load can result in overheating and accelerated wear of engine components.

Refer to the following procedure to allow the engine to cool and to prevent excessive temperatures in the turbocharger housing, which could cause oil coking problems.

NOTICE
Never turn the battery disconnect switch to the OFF position while the engine is running. Serious damage to the electrical system may result.

1. Park the machine on level ground. Refer to Operation and Maintenance Manual, “Stopping the Machine” for the recommended procedure.
2. While the machine is stopped, run the engine for 5 minutes at low idle. Idling the engine allows hot areas of the engine to cool gradually.
3. Turn the engine start ring to the OFF position or press button to stop the engine.

Note: If the “Regen Active” indicator is illuminated, do not shut off the engine. Refer to Operation and Maintenance Manual, “Monitoring System” for more information on indicators.

Engine Shutdown Switch

NOTICE
Perform a walk around inspection after actuation of a shutdown device.

Take necessary corrective action to resolve the cause of the shutdown.

Ensure that no additional damage has been done or could occur before returning to operation.

Turn the engine start ring to the OFF position or press button to stop the engine. If the engine does not stop, perform the following procedure.

Note: Always use the engine start switch to stop the engine. Use the secondary engine stop control as an alternate method to stop the engine if the start switch fails.

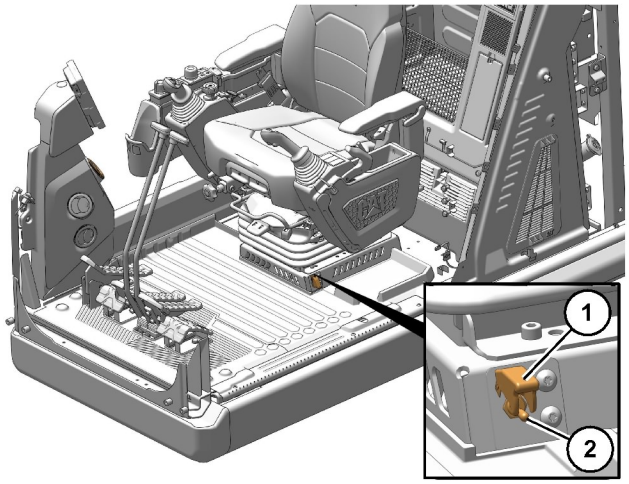

Illustration 587 g06181487

1. The switch is located below the left side of the operator seat.
2. Lift cover (1).
3. Push switch (2) upward. This should stop the engine and prevent the engine from being started again.
4. Return the switch to the original position. The engine will be enabled to start.

Note: Do not operate the machine again until the malfunction has been corrected.

5. Use the method that follows if the previous steps do not stop the engine.

Stop the Engine if an Electrical Malfunction Occurs

Turn the engine start switch to the OFF position. If the engine does not stop, perform the following procedure.

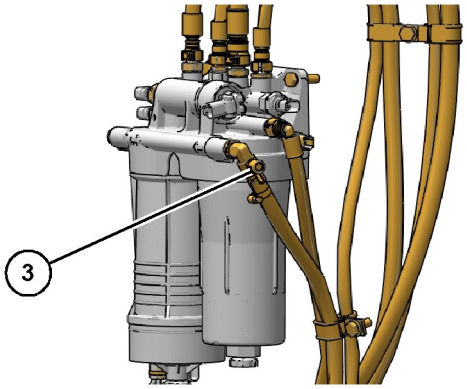

Illustration 588 g06209639

The fuel shutoff valve is on the fuel system water separator.

Shut off the fuel supply by turning the fuel shutoff valve (3) clockwise. The engine will stop after consuming the fuel in the fuel line. The engine may continue to run for a few minutes.

Repair the engine before you restart the engine. The fuel system may need to be primed. See Operation and Maintenance Manual, “Fuel System - Prime” for instructions.

i07103299

Leaving the Machine

SMCS Code: 7000

Illustration 589 g06224270

1. Use the steps and the hand holds when you dismount. When you dismount, face the machine and use both hands.
2. Inspect the engine compartment for debris. Clean out any debris to avoid a fire hazard.
3. Remove all flammable debris from the front bottom guard through the access doors to reduce a fire hazard. Discard the debris properly.
4. Always turn the battery disconnect switch to the OFF position before leaving the machine.
5. If the machine will not be operated for a month or more, remove the battery disconnect switch key.
6. Lock all compartments and all vandalism covers (if equipped).

i07735116

Machine Storage and Specified Storage Period

SMCS Code: 7000

Machine Storage

The Safety Section of this Operation and Maintenance Manual contains storage information for fuels, lubricants, and ether (if equipped).

The Operation Section of this Operation and Maintenance Manual contains information for short-term storage of this machine, including engine shutdown, parking, and instructions for leaving the machine.

For detailed steps on long-term storage refer to Special Instruction, SEHS9031, “Storage Procedure for Caterpillar Products”.

Specified Storage Period

The specified storage period of this machine is 1 year.

After the specified storage period has expired, consult your Cat dealer for inspect, repair, rebuild, install remanufactured, or install new components, and disposal options, and to establish a new specified storage period.

If a decision is made to remove the machine from service, refer to Decommissioning and Disposal for further information.

Transportation Information

i08163556

Shipping the Machine

SMCS Code: 7000; 7500

WARNING

Automatic Engine Speed Control (AEC) will increase engine speed automatically when you operate the control levers and/or travel pedals with AEC switch on.

When loading and unloading the machine from the truck or working in close quarters always turn AEC switch off to prevent any possibility of sudden movement of machine, which could result in serious injury or death.

Set the travel speed control switch to LOW before loading the machine. Never operate this switch when loading the machine on a trailer.

Investigate the travel route for overpass clearances. Make sure that there will be adequate clearance for the machine.

Remove ice, snow, or other slippery material from the loading dock and from the truck bed before you load the machine onto the transport machine. Removing ice, snow, or other slippery material will help to prevent the machine from slipping in transit.

Note: Obey all laws that govern the characteristics of a load (height, weight, width, and length). Observe all regulations that govern wide loads. Certain regions may require the removal of door hooks and cab bumpers, if equipped. Consult all local and regional regulations

Choose the flattest ground when you load the machine or when you unload the machine.

1. Before you load the machine, chock the trailer wheels or the rail car wheels.
2. When you use loading ramps, make sure that the loading ramps have adequate length, adequate width, adequate strength, and an adequate slope.
3. Maintain the slope of the loading ramps within 15 degrees of the ground.
4. Position the machine so that the machine can drive straight up the loading ramps. The final drives should be toward the rear of the machine. Do not operate the control levers while the machine is on the loading ramps.
5. When you drive over the loading ramp joint areas, maintain the balance point of the machine.
6. Lower the work tool to the bed or to the floor of the transport machine.
7. To prevent rolling of the machine or sudden movement of the machine, perform the following items:
   - Chock both tracks.
   - Install sufficient tie-downs at several locations.
   - Fasten wire cables.
8. If equipped, remove door hooks, cab bumpers, and fuel tank step as necessary. Refer to local regulations.

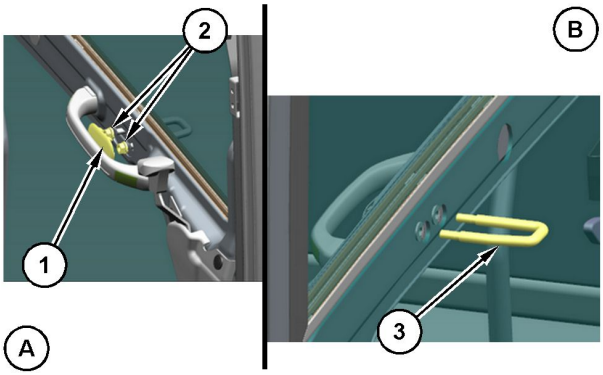

Illustration 590 g06516462

Typical example of door hook

(A) Inside
(B) Outside
(1) Cover
(2) Nuts
(3) Door Hook

a. Remove cover (1) and nuts (2) to remove door hook (3).

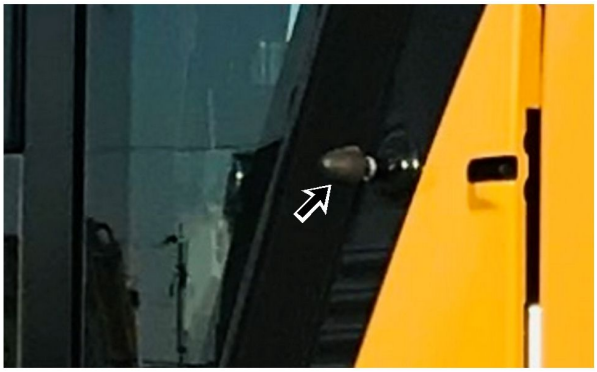

Illustration 591 g06516469

Typical example of cab bumper

b. Remove any bumpers on your cab.

NOTICE
Do not allow the chrome surface of the bucket cylinder rod to touch any part of the trailer. Damage to the rod can occur from impact with the trailer during transport.

Note: Refer to Operation and Maintenance Manual, “Specifications”.

Shipping a Machine that is not Completely Assembled

If the machine must be shipped when the boom, stick, or counterweight is not assembled on the machine, follow the instructions in Operation and Maintenance Manual, “Operation”.

WARNING

The ROPS structural certification depends on the support of the boom, stick, and counterweight in the event of a machine tip over or a machine rollover incident.

When the machine needs to be moved without the boom, stick, or counterweight being installed, avoid any machine operations which could affect machine stability as a machine tip over or a machine rollover incident could result in serious injury or death.

The machine should be operated slowly on flat, stable ground or pavement by qualified operators.

i07539618

Securing the Machine

SMCS Code: 7000

WARNING

Do not transport the machine if there is a malfunction of the swing parking brake system.

The machine may swing during transportation if the swing parking brake system is not functioning properly which could result in injury or death.

Contact your Cat dealer for service.

Comply with any laws that govern the characteristics of a load (length, width, height, and weight).

1. Move the hydraulic lockout control to the LOCKED position.
2. Turn the engine start ring to the OFF position or press button to stop engine.
3. Turn the battery disconnect switch to OFF and remove the disconnect switch key.
4. Remove the ether starting aid cylinder. See Operation and Maintenance Manual, “Ether Starting Aid Cylinder - Replace” for the removal procedure.
5. Lock the door and the access covers. Attach any vandalism protection.

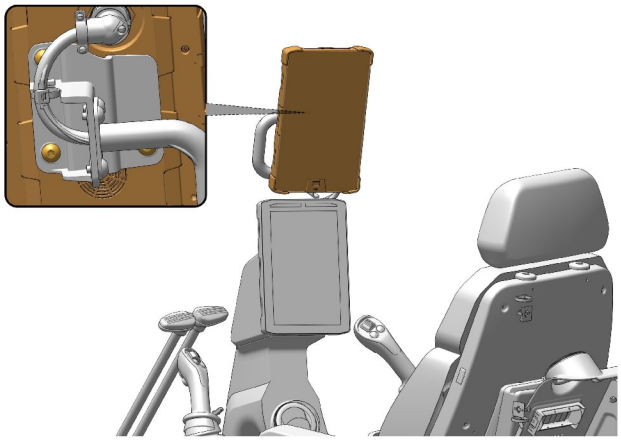

Illustration 592 g06181075

Note: Caterpillar strongly recommends removing the Cat Grade Control monitor (if equipped) before transporting the machine to protect the monitor from damage or theft.

6. Disconnect the wiring harness from the Cat Grade Control monitor. Remove the three screws that secure the monitor to the mounting bracket and remove the monitor. Remove the monitor from the cab and store in the monitor carrying case.
7. Cover the exhaust opening.

NOTICE
Do not allow the turbocharger to rotate while the engine is not operating. Damage to the turbocharger can result.

Note: Before you unload the excavator from the transport machine, remove the protective covering from the exhaust opening.

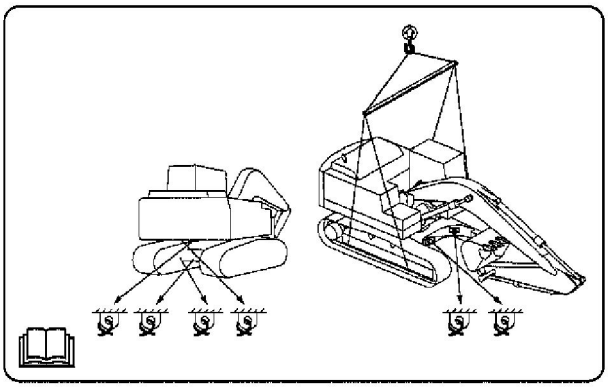

Illustration 593 g06289667

8. Chock the tracks and secure the machine with tie-downs. Make sure that you use the proper rated wire cable.

Use the front towing eyes on the lower frame, the rear towing eyes on the lower frame, and the rear towing eye that is on the upper frame.

Securely fasten all loose parts and all removed parts to the trailer or to the rail car.

When the engine is stopped, the swing parking brake is automatically applied. The swing brake prevents the upper structure from rotating.

NOTICE

In freezing weather, protect the cooling system with antifreeze, to the lowest outside expected temperature on the travel route. Or, drain the cooling system completely.

i07519776

Counterweight Removal and Installation

SMCS Code: 7056

Counterweight Removal

WARNING

Unexpected machine movement can cause injury or death.

In order to avoid possible machine movement, move the hydraulic lockout control to the LOCKED position and attach a Special Instruction, SEHS7332, "Do Not Operate" or similar warning tag to the hydraulic lockout control.

WARNING

Personal injury or death can occur from a counterweight falling during removal or installation.

Do not allow personnel under or around the counterweight during removal or installation.

Make sure that the lifting device is in good condition and is capable of handling the weight of the counterweight.

WARNING

Make certain personnel are clear of cable when there is a load on it. Cable can break and cause personal injury.

1. Position the machine on a surface that is hard and level. Lower the work tool to the ground.

Illustration 594 g06284701

2. Move the hydraulic lockout control to the LOCKED position.

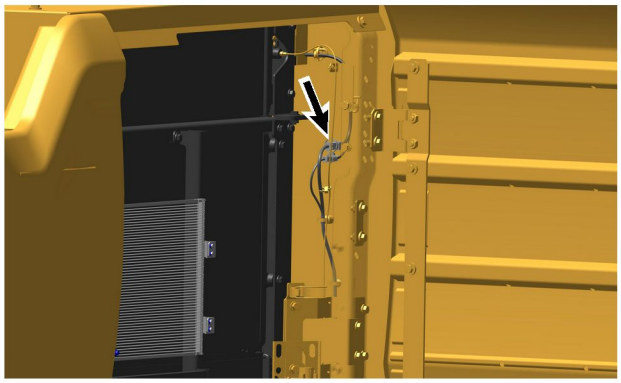

Illustration 595 g06341797

3. Before you remove the counterweight, disconnect the wiring for the rear view camera.

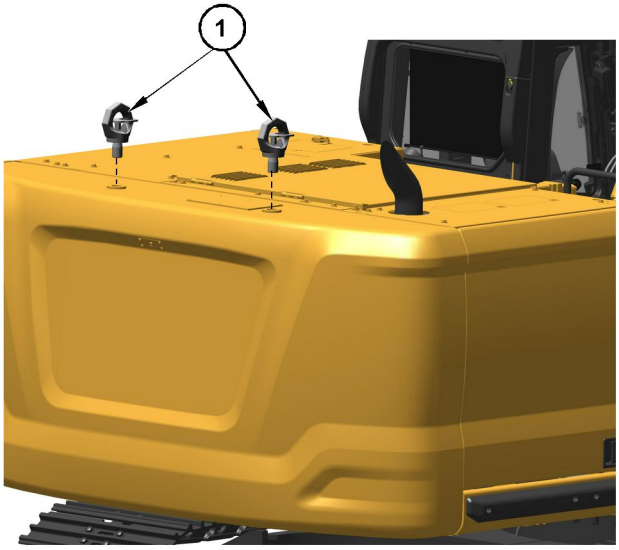

Illustration 596 g06341813

4. Insert and tighten eyebolts (1).

Illustration 597 g06341822

5. Fasten a proper rated cable with shackles to the links. Use an appropriate lifting device to tension the cable.

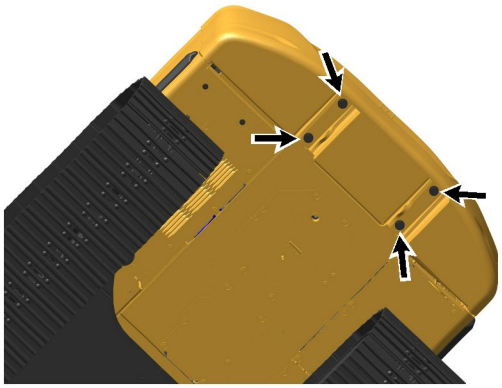

Illustration 598 g06341824

6. The counterweight mounting bolts are on the bottom of the counterweight. Remove the four counterweight mounting bolts and four washers.

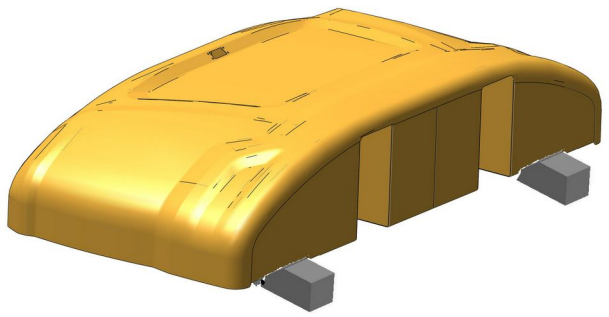

Illustration 599 g06341838

7. Separate the counterweight from the machine. Lower the counterweight onto suitable supports.

Counterweight Installation

Perform the installation procedure in reverse order.

Note: Temporarily tighten the eight counterweight mounting bolts. Decrease the tension on the lifting cable. Make sure that the counterweight is correctly positioned on the retaining plates. Tighten the bolts to a torque of 2800 ± 350 N·m (2065 ± 260 lb ft).

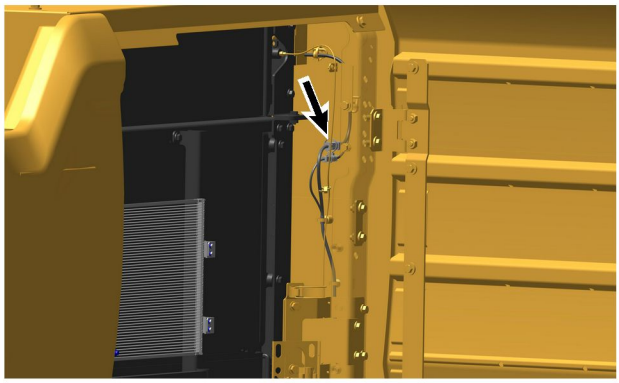

Illustration 600 g06341797

After You install the counterweight, connect the wiring for the rear view camera.

i07539775

Lifting and Tying Down the Machine

SMCS Code: 7000; 7500

WARNING

Improper lifting and tie-down techniques can allow the load to shift or fail resulting in personal injury or property damage. Use only properly rated cables and slings with lift and tie down points provided on the machine. Keep the deck of the transport vehicle clean and use anti-slip mats on steel decks.

Follow the instructions in Operation and Maintenance Manual, “Lifting and Tying Down the Machine” for the proper technique for securing the machine. Refer to Operation and Maintenance Manual, “Specifications” for specific weight information.

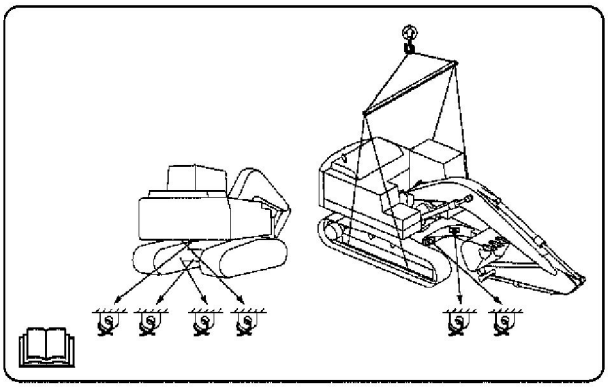

Illustration 601 g06289667

The lift and tie-down film is located near the base of the boom.

Lifting the machine

Illustration 602 g06184026

The machine center of gravity is at the center of the swing gear.

Lifting Point – To lift the machine, attach the lifting devices to the lifting points.

The weight and the instructions that are given herein describe the machine as the machine is manufactured by Caterpillar.

Refer to the Operation and Maintenance, “Specifications” for specific weight information.

Note: Only lift objects from approved lifting points and with approved lifting devices

1. Use proper rated cables and slings for lifting. The crane should be positioned so that the machine is lifted parallel to the ground.
2. To prevent contact with the machine, lifting cables should have sufficient length.
3. Move the hydraulic lockout control to the LOCKED position.
4. Thread the cable between the first and second rollers at each end of the track.
5. Do not use the foot step as a lifting point.

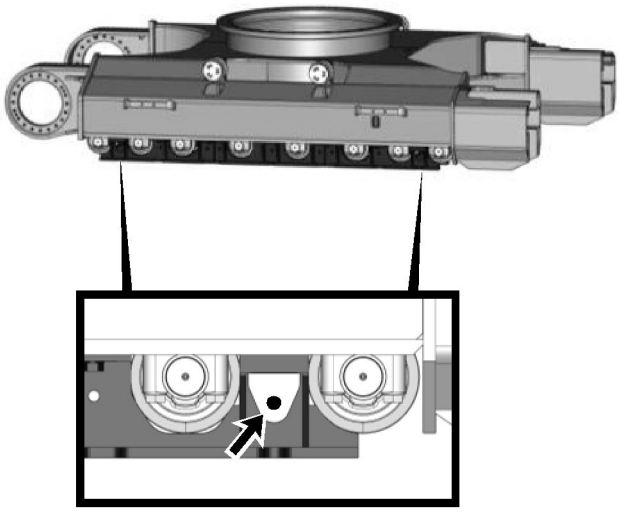

Illustration 603 g06279536

6. If the full length roller guard is equipped, there are holes at the ends of the guard for lifting cables. Refer to Illustration 603 .
7. Apply the proper protector to prevent machine/wire damage and slippage. Make sure that the rollers are not affected by the load.

Tying Down the Machine

Note: Obey all local and regional governmental regulations.

Diagonal Lashing

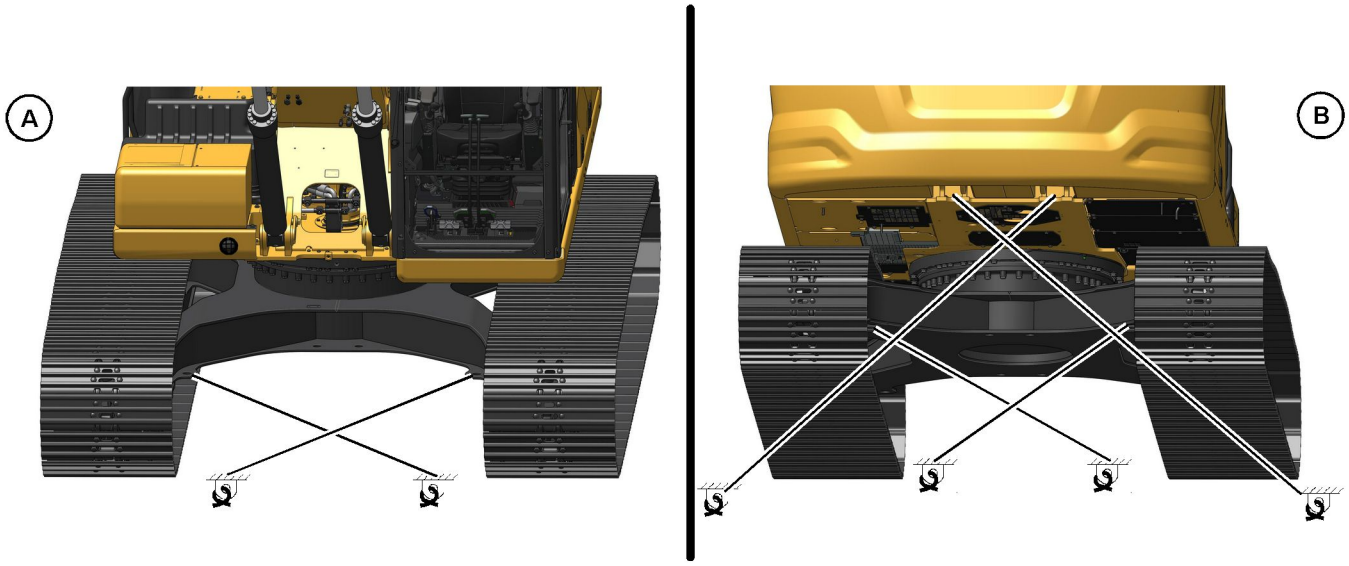

Illustration 604 g06320399

(A) Front of the machine (B) Rear of the machine

Tying Down the Machine

Tie Down Point – To tie down the machine, attach the tie-downs to the tie-down points.

The weight and the instructions that are given herein describe the machine as the machine is manufactured by Caterpillar.

Refer to the Operation and Maintenance, “Specifications” for specific weight information.

1. Use proper rated cables and shackles for tying down the machine.
2. Use the rear eyes and the front eyes that are provided on the lower frame to fasten tie-downs. Use corner protectors for sharp corners.
3. Move the hydraulic lockout control to the LOCKED position.
4. Set the lashing angle, which is on the longitudinal axis of the machine and the cable, at 30 to 50 degrees.
5. Keep the transport vehicle surface clean (for example, trailer deck).
6. For steel deck transport vehicles use skid-inhibiting or anti-slip mats (for example, rubber mats) with a friction coefficient of at least 0.3.

Lifting the Machine Segments

Bucket

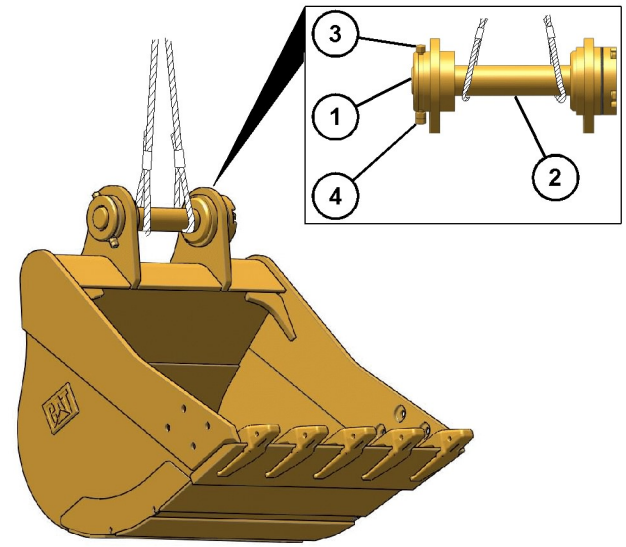

Illustration 605 g06184591

(1) Pin.(2) Sleeve.(3) Bolts.(4) Nuts.

Install pin (1) and install sleeve (2) in the brackets of the bucket. The previous illustration indicates the method to secure pin (1) with bolts (3) and nuts (4). Fasten two proper rated wire cables to pin (1).

Towing Information

i07348733

Towing the Machine

SMCS Code: 7000

WARNING

Personal injury or death could result when towing a disabled machine incorrectly.

Block the machine to prevent movement before final drives are disengaged. The machine can roll free if it is not blocked. With final drives disengaged, the machine cannot be stopped or steered.

Follow the recommendations below, to properly perform the towing procedure.

Relieve the hydraulic tank and line pressure before any disassembly.

Even after the machine has been turned off, the hydraulic oil can still be hot enough to burn. Allow the hydraulic oil to cool before draining.

NOTICE

To tow the machine, both final drives must be disengaged.

Do not operate the travel motors with the final drives disengaged. Damage could result.

These towing instructions are for moving a disabled machine for a short distance at low speed. Move the machine at a speed of 2 km/h (1.2 mph) or less to a convenient location for repair. Always haul the machine if long distance moving is required.

Shields must be provided on both machines. This will protect the operator if the tow line or the tow bar breaks.

Do not allow an operator to be on the machine that is being towed.

Before you tow the machine, make sure that the tow line or the tow bar is in good condition. Do not use a wire rope that is kinked, twisted, or damaged. Make sure that the tow line or the tow bar has enough strength for the towing procedure that is involved. The strength of the tow line or of the tow bar should be at least 150 percent of the gross weight of the towed machine. This requirement is for a disabled machine that is stuck in the mud and for being towed on a grade.

Do not use a chain for pulling a disabled machine. A chain link can break. This may cause personal injury. Use a wire rope with ends that have loops or rings. Put an observer in a safe position to watch the pulling procedure. The observer can stop the procedure if the wire rope starts to break. Stop pulling whenever the towing machine moves without moving the towed machine.

During towing, do not allow anyone to step between the towing and the towed machines.

Do not allow the wire rope to be straddled while the machine is being towed.

Keep the tow line angle to a minimum. Do not exceed a 30 degree angle from the straight ahead position.

Avoid towing the machine on a slope.

Quick machine movement could overload the tow line or the tow bar. This could cause the tow line or the tow bar to break. Gradual, steady machine movement will be more effective.

Prior to releasing the brake of the final drive, firmly lock both tracks to prevent the machine from moving suddenly. When the machine is ready to be towed, release the brake of the final drive. Refer to Operation and Maintenance Manual, “Final Drive Sun Gear Removal”.

Normally, the towing machine should be as large as the disabled machine. Make sure that the towing machine has enough brake capacity, enough weight, and enough power. The towing machine must be able to control both machines for the grade that is involved and for the distance that is involved.

You must provide sufficient control and sufficient braking when you are moving a disabled machine downhill. This may require a larger towing machine or additional machines that are connected to the rear of the disabled machine. This will prevent the machine from rolling away out of control.

All situation requirements cannot be listed. Minimal towing machine capacity is required on smooth, level surfaces. Maximum towing machine capacity is required on an incline or on a surface that is in poor condition.

Do not tow a loaded machine.

Consult your Cat dealer for the equipment that is necessary for towing a disabled machine.

Retrieval and Towing of Machine

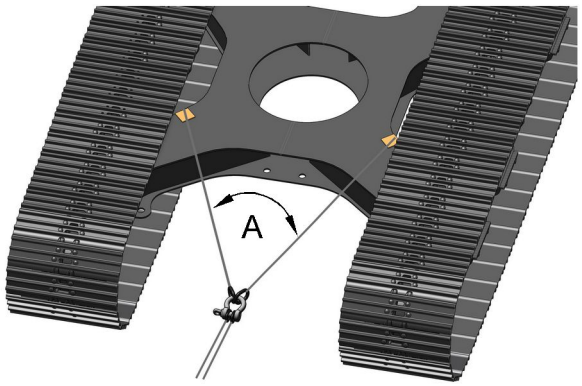

Illustration 606 g06289671

Note: Shackles must be used for towing the machine. The wire rope should be horizontal and straight to the track frame.

Install a properly rated wire rope to the lower frame of the towing machine and the lower frame of the towed machine. The permissible force for the lower frame is 100 percent of the gross weight of the towed machine.

Note: To prevent damage to the wire rope or the lower frame of the machines, use protective sleeves on the corners of the lower frame.

Retrieve the disabled machine carefully. The applied load for each wire rope should be equal. The angle (A) between each wire rope should be 60 degree maximum. Operate the machine at a low speed.

Lightweight Towing

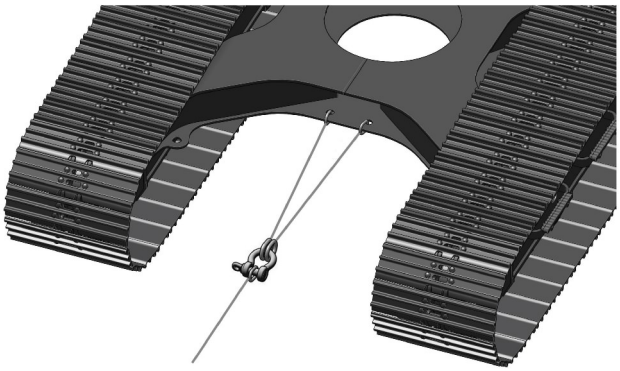

Illustration 607 g06186106

The maximum load for lightweight towing is 102900 N (75895 lb).

Shackles must be used for towing the machine. The wire rope should be horizontal and straight to the track frame.

Install a properly rated wire rope to the lower frame of the towing machine and the lower frame of the towed machine. Operate the machine at a low speed.

i06954175

Final Drive Sun Gear Removal

SMCS Code: 4050

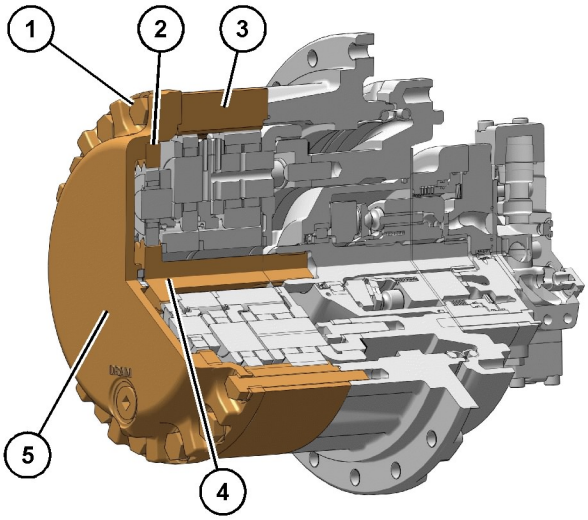

Illustration 608 g06188195

(1) Bolt
(2) Ring gear
(3) Ring gear
(4) Sun gear
(5) Final drive cover

WARNING

Without the sun gear in place, the brakes are ineffective. Personal injury or death could result. Provide other means to hold or stop the machine.

1. Thoroughly clean the area around the final drive. Make sure that you also clean the track shoes that are positioned above the final drive.

Note: Refer to Operation and Maintenance Manual, “General Hazard Information” for information on containing fluid spillage.

2. Drain the final drive oil into a suitable container. See Operation and Maintenance Manual, “Final Drive Oil - Change” for the procedure.

3. Remove 14 of 16 cover bolts (1) from final drive cover (5). Do not leave a bolt in the top hole of the cover.

4. Insert an alignment dowel through the top hole of the cover and into the threads in the final drive housing. This is necessary to support ring gear (2) and ring gear (3) while you are removing the final drive cover.

5. Remove one track shoe to allow access to the face between final drive cover (5) and ring gear (2).

6. Loosen remaining two cover bolts (1).

7. Use a hammer and a wedge to separate final drive cover (5) and ring gear (2). Make sure that ring gear (2) and ring gear (3) stay in place.

8. Remove remaining two cover bolts (1) and final drive cover (5).

9. Remove sun gear (4) from final drive.

10. Install final drive cover (5) and 16 cover bolts (1).

11. Fill the final drive with new oil. See Operation and Maintenance Manual, “Final Drive Oil - Change” for the procedure.

12. Repeat Steps 1 through 11 for the other final drive.

13. Refer to the Service Manual for information on the installation of the final drive sun gear.

Engine Starting (Alternate Methods)

i06953771

Engine Starting with Jump Start Cables
(If Equipped)

SMCS Code: 1000; 7000

WARNING

Failure to properly service the batteries may cause personal injury.

Prevent sparks near the batteries. They could cause vapors to explode. Do not allow the jump start cable ends to contact each other or the machine.

Do not smoke when checking battery electrolyte levels.

Electrolyte is an acid and can cause personal injury if it contacts skin or eyes.

Always wear eye protection when starting a machine with jump start cables.

Improper jump start procedures can cause an explosion resulting in personal injury.

Always connect the battery positive (+) to battery positive (+) and the battery negative (−) to battery negative (−).

Jump start only with an energy source with the same voltage as the stalled machine.

Turn off all lights and accessories on the stalled machine. Otherwise, they will operate when the energy source is connected.

NOTICE

To prevent damage to engine bearings and to electrical circuits when you jump-start a machine, do not allow the stalled machine to touch the machine that is used as the electrical source.

Turn on (close) the battery disconnect switch prior to the boost connection to prevent damage to electrical components on the stalled machine.

Use only equal voltage for starting. Check the battery and starter voltage rating of your machine. Use only the same voltage for jump starting. Use of a welder or higher voltage will damage the electrical system.

Severely discharged maintenance free batteries do not fully recharge from the alternator after jump starting. The batteries must be charged to proper voltage with a battery charger. Many batteries thought to be unusable are still rechargeable.

Refer to Special Instruction, SEHS7633, “Battery Test Procedure” for complete testing and charging information. This publication is available from your Cat dealer.

When the auxiliary start receptacles are not available, use the following procedure.

1. Lower the equipment to the ground. Move all controls to the HOLD position. Move the hydraulic lockout control to the LOCKED position.
2. Turn the start switch on the stalled machine to the OFF position. Turn off all accessories.
3. Turn the battery disconnect switch on the stalled machine to the ON position.
4. Move the machine that is being used as an electrical source near the stalled machine so that the jump-start cables reach the stalled machine. **Do not allow the machines to contact each other.**
5. Stop the engine of the machine that is being used as an electrical source. If you are using an auxiliary power source, turn off the charging system.

Illustration 609 g06181546

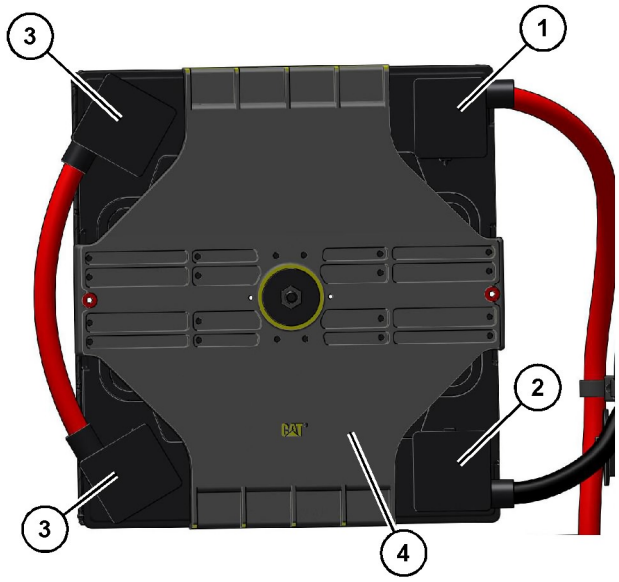

Illustration 610 g06181551

(1) Red positive post to starter
(2) The black negative post connects to the battery disconnect switch.
(3) Do not use these two connections for jump starting. The red positive post is connected in series to the black negative post.
(4) Cover

6. Ensure that battery caps on both machines are tight and correctly placed. Ensure that batteries in the stalled machine are not frozen. Make sure that the batteries have enough electrolyte.

Note: The positive terminal of the 24 V system of the source and the negative terminal of the 24 V system of the source must be identified correctly before the jumper cables are connected. The positive terminal of the 24 V system of the discharged battery must be identified correctly before the jumper cables are connected.

7. The positive ends of the jump-start cable are red. Connect one positive end of the jump-start cable to the positive cable terminal of the discharged battery. Some machines have battery sets.

Note: Batteries that are in series may be in separate compartments. Use the terminal that is connected to the starter solenoid. This battery or battery set is normally on the same side of the machine as the starter.

Do not allow the positive cable clamps to contact any metal except for the battery terminals.

8. Connect the other positive end of the jump-start cable to the positive cable terminal of the electrical source.

9. Connect one negative end of the jump-start cable to the negative cable terminal of the electrical source.

10. Finally, connect the other negative end of the jump-start cable to the frame of the stalled machine. Do not connect the jump-start cable to the battery post. Do not allow the jump-start cables to contact the battery cables, the fuel lines, the hydraulic lines, or any moving parts.

11. Start the engine of the machine that is being used as an electrical source or energize the charging system on the auxiliary power source.

12. Wait at least two minutes before you attempt to start the stalled machine. This will allow the batteries in the stalled machine to partially charge.

13. Attempt to start the stalled engine. See Operation and Maintenance Manual, “Engine Starting” for the correct starting procedure.

14. Immediately after you start the stalled engine, disconnect the jump-start cables in reverse order.

i07313575

Engine Starting with Auxiliary Start Receptacle
(If Equipped)

SMCS Code: 1000; 7000

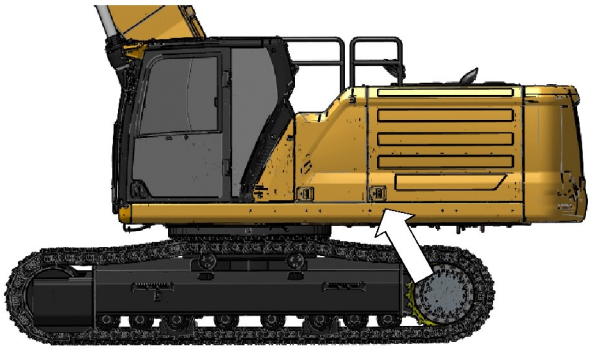

Illustration 611 g06209963

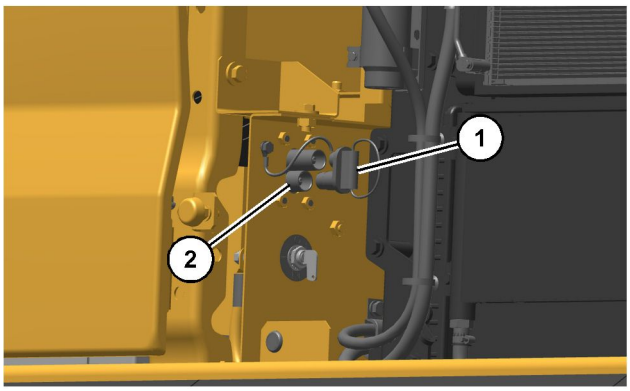

Illustration 612 g06279564

(1) Cover
(2) Receptacle

Some Caterpillar products may be equipped with an auxiliary start receptacle as a standard part. If your machine is not equipped with an auxiliary start receptacle, the machine can be equipped with an auxiliary start receptacle from parts service. This will ensure that a permanent receptacle is always available to jump-start the machine.

There are two cable assemblies that can be used to jump-start the stalled machine. You can jump-start the stalled machine from another machine that is equipped with an auxiliary start receptacle or with an auxiliary power pack. Your Caterpillar dealer can provide the correct cable lengths for your application.

1. Determine the reason that the engine will not start.

Reference: Refer to Special Instruction, SEHS7633, “Battery Test Procedure” for more information.

2. Ensure that the travel control levers on the stalled machine are in the CENTER position. Engage the hydraulic lockout control. Engage the parking brake. Lower all work tools to the ground. Move all controls to HOLD.

3. Turn the engine start switch key on the stalled machine to the OFF position. Turn off all accessories.

4. Turn the battery disconnect switch on the stalled machine to ON.

5. Move the machine that is being used as a power source close to the stalled machine. The jump-start cables should reach the batteries on both machines. **DO NOT ALLOW THE MACHINES TO CONTACT EACH OTHER.**

6. Stop the engine on the machine that is being used as a power source. If you use an auxiliary power source, turn off the charging system.

7. Connect the appropriate jump-start cable to the auxiliary start receptacle on the stalled machine.

8. Connect the other end of the jump-start cable to the auxiliary start receptacle of the machine that is being used as a power source.

9. Start the engine on the machine that is being used as a power source or energize the charging system on the auxiliary power source.

10. Wait for a minimum of 2 minutes while the batteries in the stalled machine partially charge.

11. Attempt to start the stalled engine.

12. Immediately after the stalled engine starts, disconnect the jump-start cable from the power source.

13. Disconnect the other end of the jump-start cable from the stalled machine.

14. Conclude the failure analysis on the starting charging system of the stalled machine, as required. Check the machine while the engine is running and the charging system is in operation.

Maintenance Section

Maintenance Access

i07377167

Access Door and Cover Locations

SMCS Code: 726A-CH

Engine Hood

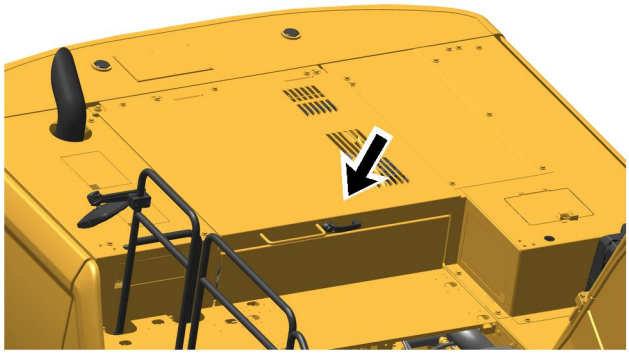

Illustration 613 g06279602

Allows access to engine.

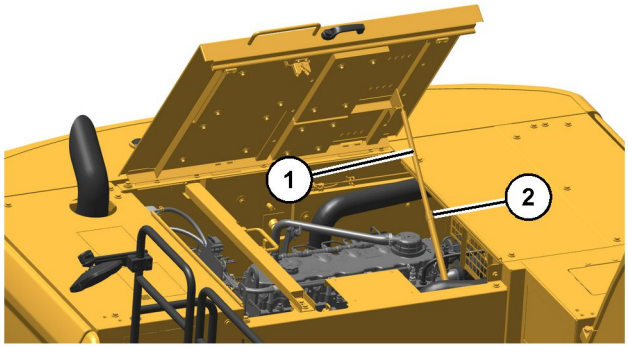

Illustration 614 g06279608

1. Open the engine hood.

2. Gas spring (1) will lock in place to hold the engine hood open.

WARNING

Operation of the Push Button Release for the Engine Hood

When closing the engine hood, only operate the push-button release by hand.

Failure to remove hands from the push-button release before closing the engine hood could result in personal injury.

Be sure to remove hands from the push-button release before completely closing the engine hood.

NOTICE
Do not add pressure to the engine hood when open.

WARNING

When closing the engine hood, Do Not operate the push-button release by foot.

Operation of the push-button release by foot could result in damage to the gas spring of the closing mechanism and/or personal injury.

Only operate the push-button release for closing the engine hood by hand.

3. To close the engine hood, support the engine hood with the door handle. Press the push-button release (2) to unlock the gas spring. Release the push button and slowly close the engine hood.

Engine Service Door

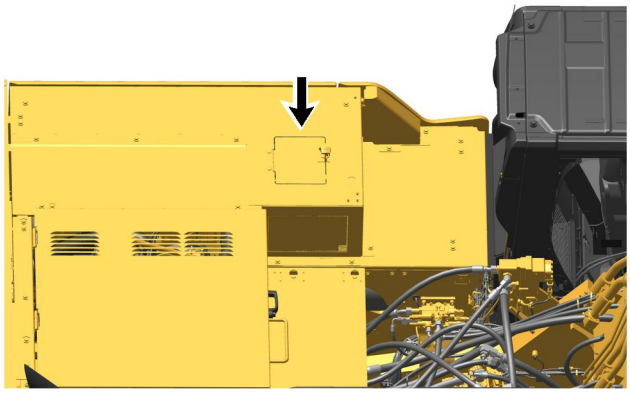

Illustration 615 g06279315

Allows access to the engine coolant reservoir.

Left Rear Access Door

Illustration 616 g06279626

Allows access to the coolant sample port, coolant drain, cooling cores, and battery disconnect switch.

Left Front Access Door

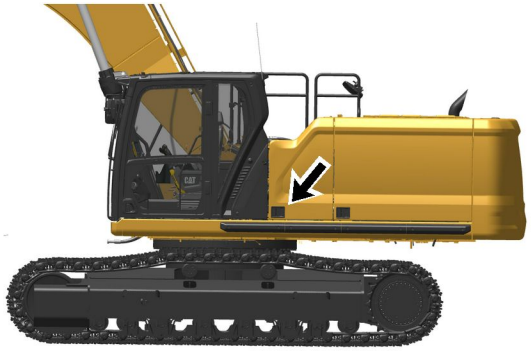

Illustration 617 g06279630

Allows access to engine air filter, batteries, power fuses, and window washer reservoir.

Right Side Access Door

Illustration 618 g06279640

Allows access to the engine oil filter and engine oil sampling port. Additionally, the compartment houses the hydraulic pump, fuel filters, refueling pump, fuel tank drain valve, hydraulic tank sight gauge and tool storage box.

Storage Box

Illustration 619 g06279648

Allows access to the Diesel Exhaust Fluid (DEF) tank for machines equipped with Tier 4 engines. The compartment is empty and free for storage on machines that are equipped with Tier 3 engines.

Lubricant Viscosities and Refill Capacities

i07419350

Lubricant Viscosities
(Fluids Recommendations)

SMCS Code: 7581

General Information for Lubricants

When you are operating the machine in temperatures below −20°C (−4°F), refer to Special Publication, SEBU5898, “Cold Weather Recommendations”. This publication is available from your Cat dealer.

Refer to the “Lubricant Information” section in the latest revision of the Special Publication, SEBU6250, “Caterpillar Machine Fluids Recommendations” for a list of Cat engine oils and for detailed information. This manual may be found on the web at Safety.Cat.com.

The footnotes are a key part of the tables. Read all footnotes that pertain to the machine compartment in question.

Selecting the Viscosity

To select the proper oil for each machine compartment, refer to the “Lubricant Viscosity for Ambient Temperature” table. Use the oil type AND oil viscosity for the specific compartment at the proper ambient temperature.

The proper oil viscosity grade is determined by the minimum ambient temperature (the air in the immediate vicinity of the machine). Measure the temperature when the machine is started and while the machine is operated. To determine the proper oil viscosity grade, refer to the “Min” column in the table. This information reflects the coldest ambient temperature condition for starting a cold machine and for operating a cold machine. Refer to the “Max” column in the table for operating the machine at the highest temperature that is anticipated. Unless specified otherwise in the “Lubricant Viscosities for Ambient Temperatures” tables, use the highest oil viscosity that is allowed for the ambient temperature.

Machines that are operated continuously should use oils that have the higher oil viscosity in the final drives and in the differentials. The oils that have the higher oil viscosity will maintain the highest possible oil film thickness. Refer to “General Information for Lubricants” article, “Lubricant Viscosities” tables, and any associated footnotes. Consult your Cat dealer if additional information is needed.

NOTICE
Not following the recommendations found in this manual can lead to reduced performance and compartment failure.

Engine Oil

Cat oils have been developed and tested to provide the full performance and life that has been designed and built into Cat engines.

Cat DEO-ULS or oils that meet the Cat ECF-3 specification, API CJ-4, and the newer API CK-4, are required for use in the applications listed below. Cat DEO-ULS and oils meeting Cat ECF-3 specification, API CJ-4, the newer API CK-4, and ACEA E9 oil categories have been developed with limited sulfated ash, phosphorus, and sulfur. These chemical limits are designed to maintain the expected aftertreatment devices life, performance, and service interval. If oils meeting the Cat ECF-3 specification, API CJ-4, the newer API CK-4 specifications are not available, oils meeting ACEA E9 may be used. ACEA E9 oils meet the chemical limits designed to maintain aftertreatment device life. ACEA E9 oils are validated using some but not all ECF-3 and API CJ-4 standard engine performance tests. Consult your oil supplier when considering use of an oil that is not Cat ECF-3, API CJ-4, or the newer API CK-4 qualified.

Failure to meet the listed requirements will damage aftertreatment-equipped engines and can negatively impact the performance of the aftertreatment devices. The Diesel Particulate Filter (DPF) if equipped, will plug sooner and require more frequent DPF ash service intervals.

Typical aftertreatment systems may include the following:

- Diesel Particulate Filters (DPF)
- Diesel Oxidation Catalysts (DOC)
- Selective Catalytic Reduction (SCR)
- Lean NOx Traps (LNT)

Other systems may apply.

Oils that are per API CI-4 or prior categories are not allowed. These oils have high ash and are not appropriate for use in engines with aftertreatment devices.

Table 25

Lubricant Viscosities for Ambient Temperatures						
Compartment or System	**Oil Type and Performance Requirements**	**Oil Viscosities**	**°C**		**°F**	
			Min	**Max**	**Min**	**Max**
Engine Crankcase for all Machines	**Cat DEO-ULS Cold Weather**	SAE 0W-40	−40	40	−40	104
	Cat DEO-ULS SYN	SAE 5W-40	−30	50	−22	122
	Cat DEO-ULS	SAE 10W-30	−18	40	0	104
		SAE 15W-40	−10	50	14	122
Pump Coupling (If Equipped)	**Cat DEO-ULS**	SAE 10W-30	−18	40	0	104

Hydraulic Systems

Refer to the “Lubricant Information” section in the latest revision of the Special Publication, SEBU6250, “Caterpillar Machine Fluids Recommendations” for detailed information. This manual may be found on the web at Safety.Cat.com.

The following are the preferred oils for use in most Cat machine hydraulic systems:

- Cat HYDO Advanced 10 SAE 10W
- Cat HYDO Advanced 20 SAE 20W
- Cat HYDO Advanced 30 SAE 30
- Cat BIO HYDO Advanced, Multigrade

Cat HYDO Advanced oils allow 6000 hours or higher oil drain intervals for most applications. S·O·S Services oil analysis is recommended when the oil drain interval is increased to 6000 hours or higher. In comparison, non-Cat commercial hydraulic oils (second choice oils) allow 2000 hours oil drain interval. Itis recommended to followthe maintenance interval schedule for oil filter changes and for oil sampling that is stated in the Operation and Maintenance Manual for your particular machine. Consult your Cat dealer for details. When switching to Cat HYDO Advanced fluids, cross contamination with the previous oil should be kept to less than 10%.

Second choice oils are listed below.

- Cat MTO
- Cat DEO
- Cat DEO-ULS
- Cat TDTO
- Cat TDTO Cold Weather
- Cat TDTO-TMS
- Cat DEO-ULS Cold Weather

Note: Oil drain intervals of the oils listed above are less than those of Cat HYDO Advanced oils. The oil drain interval of these oils is typically 2000 hours and up to a maximum of 4000 hours. An exception is Cat TDTO Cold Weather oil which allows 6000 hours or higher oil drain interval. S·O·S Services oil analysis is required when the oils listed above are used in Cat hydraulic system components and hydrostatic transmissions.

Table 26

Lubricant Viscosities for Ambient Temperatures						
Compartment or System	**Oil Type and Performance Requirements**	**Oil Viscosities**	**°C**		**°F**	
			Min	**Max**	**Min**	**Max**
Hydraulic System	**Cat HYDO Advanced 10** Cat TDTO	SAE 10W	−20	40	−4	104
	Cat HYDO Advanced 20 Cat TDTO	SAE 20W	–5	45	23	113
	Cat HYDO Advanced 30 Cat TDTO	SAE 30	10	50	50	122
	Cat BIO HYDO Advanced	“ISO 46” Multi-Grade	−30	50	−22	122
	Cat MTO Cat DEO-ULS Cat DEO	SAE10W-30	−20	40	−4	104
	Cat DEO-ULS Cat DEO	SAE15W-40	−15	50	5	122
	Cat TDTO-TMS	Multi-Grade	−15	50	5	122
	Cat DEO-ULS SYN	SAE 5W-40	−25	40	−13	104
	Cat DEO-ULS Cold Weather	SAE0W-40	−40	40	−40	104
	Cat TDTO Cold Weather	SAE 0W-20	−40	40	−40	104

For applications requiring the use of fire-resistant hydraulic fluids, Caterpillar recommends the use of EcoSafe FR-46. This product is a fully synthetic, non-aqueous hydraulic fluid. Water based and glycol-based hydraulic products are not recommended for use in Cat machine hydraulic systems. EcoSafe FR-46 is an ISO 46 multi-grade product. For more information refer to the product information provided by the manufacturer of EcoSafe hydraulic oil. Refer to your Cat dealer for availability.

Other Fluid Applications

Table 27

Excavators, Front Shovels, Mass Excavators, Demolition Excavators, and Track Material Handlers Lubricant Viscosities for Ambient Temperatures						
Compartment or System	**Oil Type and Performance Requirements**	**Oil Viscosity Grade**	**°C**		**°F**	
			Min	**Max**	**Min**	**Max**
Final Drives and Swing Drives	**Cat TDTO Cold Weather**	SAE 0W-20	-40	0	-40	32
	Cat TDTO	SAE 10W	−30	0	-22	32
		SAE 30(1)	−30	35	−22	95
		SAE 50	-15	50	5	122
	Cat TDTO-TMS	Multi-Grade	−25	25	−13	77
Track Roller Frame Recoil Spring and Pivot Shaft Bearings	**Cat TDTO Cold Weather**	SAE 0W-20	−40	0	−40	32
	Cat TDTO	SAE 10W	−30	0	−22	32
		SAE 30(1)	−20	25	−4	77

(continued)

(Table 27, contd)

Excavators, Front Shovels, Mass Excavators, Demolition Excavators, and Track Material Handlers Lubricant Viscosities for Ambient Temperatures						
Compartment or System	Oil Type and Performance Requirements	Oil Viscosity Grade	°C		°F	
			Min	Max	Min	Max
		SAE 50	0	50	32	122
	Cat TDTO-TMS	Multi-Grade	−25	25	−13	77
Track Idlers and Track Rollers	Cat DEO-ULS Cat DEO	SAE 15W-40(1)	-10	50	14	122
	Cat DEO Cold Weather	SAE 0W-40	−40	40	−40	104
	Cat DEO-ULS SYN	SAE 5W-40	−35	40	−31	104
	Cat FDAO SYN	Multi-Grade	-30	50	-22	122

(1) Factory fill oil for standard configuration machines.

Special Lubricants

Grease

To use a non-Cat grease, the supplier must certify that the lubricant is compatible with Cat grease.

Each pin joint should be flushed with the new grease. Ensure that all old grease is removed. Failure to meet this requirement may lead to failure of a pin joint.

Table 28

Recommended Grease						
Compartment or System	Grease Type	NLGI Grade	°C		°F	
			Min	Max	Min	Max
External Lubrication Points	Cat Prime Application Grease	NLGI Grade 2	−20	140	−4	284
	Cat Extreme Application Grease	NLGI Grade 1	−20	140	−4	284
		NLGI Grade 2	−15	140	+5	284
	Cat Extreme Application Grease-Artic	NLGI Grade 0.5	-50	130	-58	266
	Cat Extreme Application Grease-Desert	NLGI Grade 2	−10	140	+14	284
	Cat Utility Grease	NLGI Grade 2	−20	140	−4	284
	Cat Ball Bearing Grease	NLGI Grade 2	−20	160	−4	320

Diesel Fuel Recommendations

Diesel fuel must meet Caterpillar Specification for Distillate Fuel and the latest revisions of “ASTM D975” and “EN 590” to ensure optimum engine performance. Refer to Special Publication, SEBU6250, “Caterpillar Machine Fluids Recommendations” for the latest fuel information and for Cat fuel specification. This manual may be found on the Web at Safety.Cat.com.

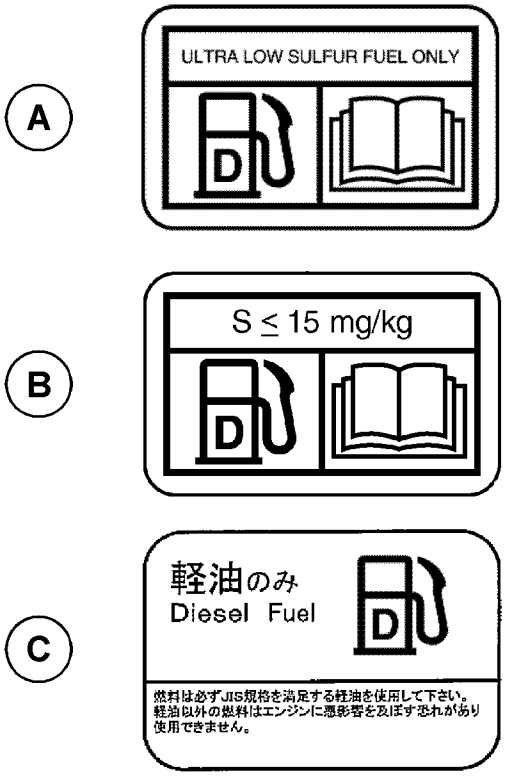

Illustration 620 g03218956

(A) North America film
(B) Europe, Africa, Middle East film
(C) Japan film

NOTICE

Ultra Low Sulfur Diesel (ULSD) fuel 0.0015 percent (≤15 ppm (mg/kg)) sulfur is required by regulation for use in engines certified to nonroad Tier 4 standards (U. S. EPA Tier 4 certified) and that are equipped with exhaust aftertreatment systems.

European ULSD 0.0010 percent (≤10ppm (mg/kg)) sulfur fuel is required by regulation for use in engines certified to European Stage V type-approved nonroad engines. Additionally, the Cetane number should not be less than 45, and the biodiesel content should not be greater than 20% volume/volume.

Misfueling with fuels of higher sulfur level can have the following negative effects:

- **Shorten the time interval between aftertreatment device service intervals (cause the need for more frequent service intervals)**
- **Adversely impact the performance and life of aftertreatment devices (cause loss of performance)**
- **Reduce regeneration intervals of aftertreatment devices**
- Reduce engine efficiency and durability.
- Increase the wear.
- Increase the corrosion.
- Increase the deposits.
- Lower fuel economy
- Shorten the time period between oil drain intervals (more frequent oil drain intervals).
- Increase overall operating costs.

Failures that result for the use of improper fuels are not Caterpillar factory defects. Therefore, the cost of repairs would not be covered by a Caterpillar warranty.

Caterpillar does not require the use of ULSD in non-road and machine applications that are not Tier 4/ Stage V certified engines and are not equipped with aftertreatment devices. For Tier 4/Stage V certified engines, always follow operating instructions to ensure that the correct fuels are used.

Refer to Special Publication, SEBU6250, “Caterpillar Machine Fluids Recommendations” for more details about fuels, lubricants, and Tier 4/Stage V requirements. This manual may be found on the web at Safety.Cat.com.

Diesel Exhaust Fluid

General Information

Diesel Exhaust Fluid (DEF) is a liquid that is injected into the exhaust system of engines equipped with Selective Catalytic Reduction (SCR) systems. SCR reduces emissions of nitrogen oxides (NOx) in diesel engine exhaust.

Diesel Exhaust Fluid (DEF) is also known under other names including Aqueous Urea Solution (AUS) 32, AdBlue, or generically referred to as urea.

In engines equipped with SCR emissions reduction system, DEF is injected in controlled amounts into the engine exhaust stream. At the elevated exhaust temperature, urea in DEF is converted to ammonia. The ammonia chemically reacts with NOx in diesel exhaust in the presence of the SCR catalyst. The reaction converts NOx into harmless nitrogen (N2) and water (H2O).

DEF Recommendations

For use in Cat engines, DEF must meet all the requirements defined by “ISO 22241-1” Requirements.

Caterpillar recommends the use of DEF available through the Cat parts ordering system for use in Cat engines equipped with SCR systems.

In North America, commercial DEF that is API approved and meets all the requirements defined in “ISO 22241-1” may be used in Cat engines that are equipped with SCR systems.

Outside of North America, commercial DEF that meets all requirements defined in “ISO 22241-1” may be used in Cat engines that are equipped with SCR systems.

The supplier should provide documentation to prove that the DEF is compliant with the requirements of “ISO 22241-1”.

NOTICE
Cat does not warrant the quality or performance of non-Cat fluids.

NOTICE
Do not use agriculture grade urea solutions. Do not use any fluids that do not meet “ISO 22241-1” Requirements in SCR emissions reduction systems. Use of these fluids can result in numerous problems including damage to SCR equipment and a reduction in NOx conversion efficiency.

DEF is a solution of solid urea that is dissolved in demineralized water to produce a final concentration of 32.5% urea. DEF concentration of 32.5% is optimal for use in SCR systems. DEF solution of 32.5% urea has the lowest attainable freeze point of −11.5° C (11.3° F). DEF concentrations that are higher or lower than 32.5% have higher freeze points. DEF dosing systems and “ISO 22241-1” specifications are designed for a solution that is approximately 32.5%.

Caterpillar offers a refractometer, Cat part number 360-0774, that can be used to measure DEF concentration. Follow the instructions provided with the instrument. Appropriate commercial portable refractometers can be used to determine urea concentration. Follow the instructions from the manufacturer.

DEF Guidelines

DEF solution is typically colorless and clear. Changes to color or clarity are indicators of quality issues. Quality of DEF can degrade when stored and handled inappropriately or if DEF is not protected from contamination. Details are provided below.

If quality issues are suspected, testing of DEF should focus on urea percentage, alkalinity as NH3 and biuret content. DEF that does not pass all these tests or that is no longer clear should not be used.

Materials compatibility

DEF is corrosive. Due to the corrosion caused, DEF must be stored in tanks constructed of approved materials. Recommended storage materials:

Stainless Steels:

- 304 (S30400)
- 304L (S30403)
- 316 (S31600)
- 316L (S31603)

Alloys and metals:

- Chromium Nickel (CrNi)
- Chromium Nickel Molybdenum (CrNiMo)
- Titanium

Non-metallic materials:

- Polyethylene
- Polypropylene
- Polyisobutylene
- Teflon (PFA)
- Polyfluoroethylene (PFE)
- Polyvinylidene fluoride (PVDF)
- Polytetrafluoroethylene (PTFE)

Materials NOT compatible with DEF solutions include Aluminum, Magnesium, Zinc, Nickel coatings, Silver and Carbon steel, and Solders containing any of the above. Unexpected reactions may occur if DEF solutions come in contact with any non-compatible material or unknown materials.

Bulk storage

Follow all local regulations covering bulk storage tanks. Follow proper tank construction guidelines. Tank volume typically should be 110% of planned capacity. Appropriately vent indoor tanks. Plan for control of overflow of the tank. Heat tanks that dispense DEF in cold climates.

Bulk tank breathers should be fitted with filtration to keep airborne debris from entering the tank. Desiccant breathers should not be used because water will be absorbed, which potentially can alter DEF concentration.

Handling

Follow all local regulations covering transport and handling. DEF transport temperature is recommended to be −5° C (23° F) to 25° C (77° F). All transfer equipment and intermediate containers should be used exclusively for DEF. Containers should not be reused for any other fluids. Ensure that transfer equipment is made from DEF-compatible materials. Recommended material for hoses and other non-metallic transfer equipment includes:

- Nitrile Rubber (NBR)
- Fluoroelastomer (FKM)
- Ethylene Propylene Diene Monomer (EPDM)

The condition of hoses and other nonmetallics that are used with DEF should be monitored for signs of degradation. DEF leaks are easily recognizable by white urea crystals that accumulate at the site of the leak. Solid urea can be corrosive to galvanized or unalloyed steel, aluminum, copper, and brass. Leaks should be repaired immediately to avoid damage to surrounding hardware.

Cleanliness

Contaminants can degrade the quality and life of DEF. Filtering DEF is recommended when dispensed into the DEF tank. Filters should be compatible with DEF and should be used exclusively with DEF. Check with the filter supplier to confirm compatibility with DEF before using. Mesh-type filters using compatible metals, such as stainless steel, are recommended. Paper (cellulose) media and some synthetic filter media are not recommended because of degradation during use.

Care should be taken when dispensing DEF. Spills should be cleaned immediately. Machine or engine surfaces should be wiped clean and rinsed with water. Caution should be used when dispensing DEF near an engine that has recently been running. Spilling DEF onto hot components will cause harmful vapors.

Stability

NOTICE
Storing Diesel Exhaust Fluid in high heat areas is not recommended. Do not store DEF in high heat generating areas on the machine, such as the pump compartment or the engine compartment. The quality of the DEF can degrade when exposed to high temperatures.

DEF fluid is stable when stored and handled properly. The quality of DEF rapidly degrades when stored at high temperatures. The ideal storage temperature for DEF is between −9° C (15.8° F) and 25° C (77° F). DEF that is stored above 35° C (95° F) for longer than 1 month must be tested before use. Testing should evaluate Urea Percentage, Alkalinity as NH3 and Biuret content.

The length of storage of DEF is listed in the following table:

Table 29

Storage Temperature	Expected DEF Life
Below 25° C (77° F)	18 months
25° C (77° F) to 30° C (86° F)	12 months
30° C (86° F) to 35° C (95° F)	6 months
Above 35° C (95° F)	test quality before use

Refer to “ISO 22241” document series for more information about DEF quality control.

Note: Dispose of all fluids according to applicable regulations and mandates.

Fuel Additives

Cat Diesel Fuel Conditioner and Cat Fuel System Cleaner are available for use when needed. These products are applicable to diesel and biodiesel fuels. Consult your Cat dealer for availability.

Biodiesel

Biodiesel is a fuel that can be made from various renewable resources that include vegetable oils, animal fat, and waste cooking oil. Soybean oil and rapeseed oil are the primary vegetable oil sources. To use any of these oils or fats as fuel, the oils, or fats are chemically processed (esterified). The water and contaminants are removed.

U.S. distillate diesel fuel specification “ASTM D7467” includes up to B20 (20 percent) biodiesel. Any diesel fuel in the U.S. may contain up to B20 biodiesel fuel.

European distillate diesel fuel specification “EN16709:2015” includes up to B20 (20 percent) biodiesel. Any diesel fuel in Europe may contain up to B20.

Note: The diesel portion used in the biodiesel blend must be Ultra Low Sulfur Diesel (15 ppm sulfur or less, per “ASTM D975”). In Europe the diesel fuel portion used in the biodiesel blend must be sulfur free diesel (10 ppm sulfur or less, per “EN 590”). The final blend must have 15 ppm sulfur or less.

When biodiesel fuel is used, certain guidelines must be followed. Biodiesel fuel can influence the engine oil, aftertreatment devices, non-metallic, fuel system components, and others. Biodiesel fuel has limited storage life and has limited oxidation stability. Follow the guidelines and requirements for engines that are seasonally operated.

To reduce the risks associated with the use of biodiesel, the final biodiesel blend and the biodiesel fuel used must meet specific blending requirements.

All the guidelines and requirements are provided in the latest revision of Special Publication, SEBU6250, “Caterpillar Machine Fluids Recommendations”. This manual may be found on the web at Safety.Cat.com.

Coolant Information

The information provided in this “Coolant Recommendation” section should be used with the “Lubricants Information” provided in the latest revision of Special Publication, SEBU6250, “Caterpillar Machine Fluids Recommendations”. This manual may be found on the web at Safety.Cat.com.

The following two types of coolants may be used in Cat diesel engines:

Preferred – Cat ELC (Extended Life Coolant)

Acceptable – Cat DEAC (Diesel Engine Antifreeze/ Coolant)

NOTICE
Never use water alone as a coolant. Water alone is corrosive at engine operating temperatures. In addition, water alone does not provide adequate protection against boiling or freezing.

Table 30

Recommendations for Finished Coolants for use in Cat engines				
Coolant Type	**Recommendations**	**Product**	**Service hours (1)(2)**	**Required Maintenance(3)**
Cat ELC, Cat ELI, or commercial coolant that meets Cat EC-1	Preferred	Cat ELC	12000 hours or 6 years	Add Cat ELC Extender at 6000 service hours or one half of service life
		Cat ELI (water based) (4)	12000 hours or 6 years	Add Cat ELC Extender at 6000 service hours or one half of service life
	Min requirements	Cat EC-1 specification and “ASTM D6210” and Organic Additive Technology (OAT) based on a combination of a monocarboxylic acid and a dicarboxylic acid. Free of phosphate, borate, and silicate. Tolyltriazole: minimum typical concentration of 900 ppm Nitrite: minimum typical concentration of 500 ppm in new coolants	6000 hours or 6 years	Add Extender at 3000 service hours or one half of service life
Cat DEAC, Cat SCA, conventional coolants, and commercial extended life coolants that do not meet EC-1	Acceptable	Cat DEAC	3000 hours or 3 years	SCA at maintenance intervals
		Cat SCA (water based) (4)	3000 hours or 2 years	SCA at maintenance intervals

(continued)

(Table 30, contd)

Recommendations for Finished Coolants for use in Cat engines				
	Min requirements for fully formulated Heavy-Duty Commercial coolants	“ASTM D6210” and Nitrite (as NO2) concentration: Minimum of 1200 ppm (70 grains/US gal) and maximum of 2400 ppm (140 grains/US gal) Silicon concentration: minimum of 100 ppm and maximum of 275 ppm	3000 hours or 2 years	SCA at maintenance intervals
	Min requirements for SCA and water (4) (5)	Commercial supplemental coolant additive and water having Nitrite (as NO2) concentration: Minimum of 1200 ppm (70 grains/US gal) and maximum of 2400 ppm (140 grains/US gal) Silicon concentration: minimum of 100 ppm and maximum of 275 ppm	3000 hours or 1 year	Per manufacturer recommendations

(1) New Coolants at 50 volume percent diluted. Coolants that are prediluted at the coolant manufacturer must be diluted with water that meets Reagent 4 “ASTM D1193” requirements.
(2) Maintain the in-service coolant at the given limits.
(3) For appropriate maintenance procedures, refer to the details given in this Chapter. For applications that allow the use of Cat ELI in water, a minimum of 7.5 percent of Cat ELI is recommended. For applications that allow the use of SCA and water, a minimum of 6 percent to a maximum of 8 percent concentration of Cat SCA are recommended.
(4) Water-based coolants are not allowed for use in machines that has NOx reduction aftertreatment devices, in engines that has AATAC and in Marine engines that have SWAC
(5) There are currently no industry standards to define the quality of water-based conventional coolants. To control the quality of SCA and water coolants, the commercial SCA additive package should pass ASTM D6210 when this package is used in a glycol-based coolant. Do not use a commercial SCA additive package that only meets the ASTM D3306 or equivalent specification when used in a glycol-based coolant.

i07905439

Capacities (Refill)

SMCS Code: 1000; 7000

Table 31

336 and 340 Approximate Refill Capacities			
Component or System	**Liters**	**US gal**	**Recommended Type**
Cooling System	40	10.6	Refer to Operation and Maintenance Manual, “Lubricant Viscosities”.
Fuel Tank	600	159	
Engine Crankcase with Filter	32	8.5	
Hydraulic System(1)	161	43	
Swing Drive	18	4.8	
Each Final Drive	8	2	
DEF Tank	80	21	
Pump Coupling	0.65	0.17	SAE 10W-30 Engine Oil
	kg	**lbs**	
Refrigerant(2)	1	2.2	R-134a

(continued)

(Table 31, contd)

336 and 340 Approximate Refill Capacities			
Component or System	**Liters**	**US gal**	**Recommended Type**
Swing Gear	26	57	Refer to Operation and Maintenance Manual, “Lubricant Viscosities”.
	mL	**oz**	
Refrigerant Oil compressor(2)	240	8.2	Polyalkylene Glycol (PAG) Oil

(1) The amount of hydraulic fluid that is needed to refill the hydraulic system after performing Operation and Maintenance Manual, “Hydraulic System Oil - Change”
(2) Refer to Service Manual, “Air Conditioning and Heating R-134a for All Caterpillar Machines” for additional information

i07445339

S·O·S Information

SMCS Code: 1000; 1348; 3080; 4050; 5050; 7000; 7542-008

S·O·S Services is a highly recommended process for Cat customers to use in order to minimize owning and operating cost. Customers provide oil samples, coolant samples, and other machine information. The dealer uses the data in order to provide the customer with recommendations for management of the equipment. In addition, S·O·S Services can help determine the cause of an existing product problem.

Refer to Special Publication, SEBU6250, “Caterpillar Machine Fluid Recommendations” for detailed information concerning S·O·S Services.

The effectiveness of S·O·S Services is dependent on timely submission of the sample to the laboratory at recommended intervals.

Refer to the Operation and Maintenance Manual, “Maintenance Interval Schedule” for a specific sampling location and a service hour maintenance interval.

Consult your Cat dealer for complete information and assistance in establishing an S·O·S program for your equipment.

Maintenance Support

i07477696

Prepare the Machine for Maintenance

SMCS Code: 1000; 7000

Refer to the following procedure before you perform any maintenance to the machine.

WARNING

Personal injury can result from hydraulic oil pressure and hot oil.

Hydraulic oil pressure can remain in the hydraulic system after the engine has been stopped. Serious injury can be caused if this pressure is not released before any service is done on the hydraulic system.

Make sure all of the attachments have been lowered, oil is cool before removing any components or lines. Remove the oil filler cap only when the engine is stopped, and the filler cap is cool enough to touch with your bare hand.

NOTICE

Care must be taken to ensure that fluids are contained during performance of inspection, maintenance, testing, adjusting, and repair of the product. Be prepared to collect the fluid with suitable containers before opening any compartment or disassembling any component containing fluids.

Refer to Special Publication, PERJ1017, “Dealer Service Tool Catalog” for tools and supplies suitable to collect and contain fluids on Cat ® products.

Dispose of all fluids according to local regulations and mandates.

Note: Permit only one operator on the machine. Keep all other personnel away from the machine or in view of the operator.

1. Park the machine on a dry, level, solid surface that is free of any debris.

Note: The surface must be solid enough to support the weight of the machine and any tooling that is used to support the machine.

2. Engage the parking brake. Place wheel blocks in front and behind the wheels or tracks.
3. Lower all work tools to the ground.
4. Stop the engine.
5. Release the pressure in the hydraulic system. Refer to Operation and Maintenance Manual, “System Pressure Release” for more information.

Perform a visual inspection first. If the visual checks are completed but the problem has not been identified, perform operational checks. If the problem has not been identified, perform instrument tests. This procedure will help to identify system problems.

i07418655

Service Interval Chart

SMCS Code: 7000

The service interval chart is located inside the cab and on the window.

Refer to this Operation and Maintenance Manual, “Maintenance Interval Schedule” for the correct maintenance intervals and procedures that are specific to your machine.

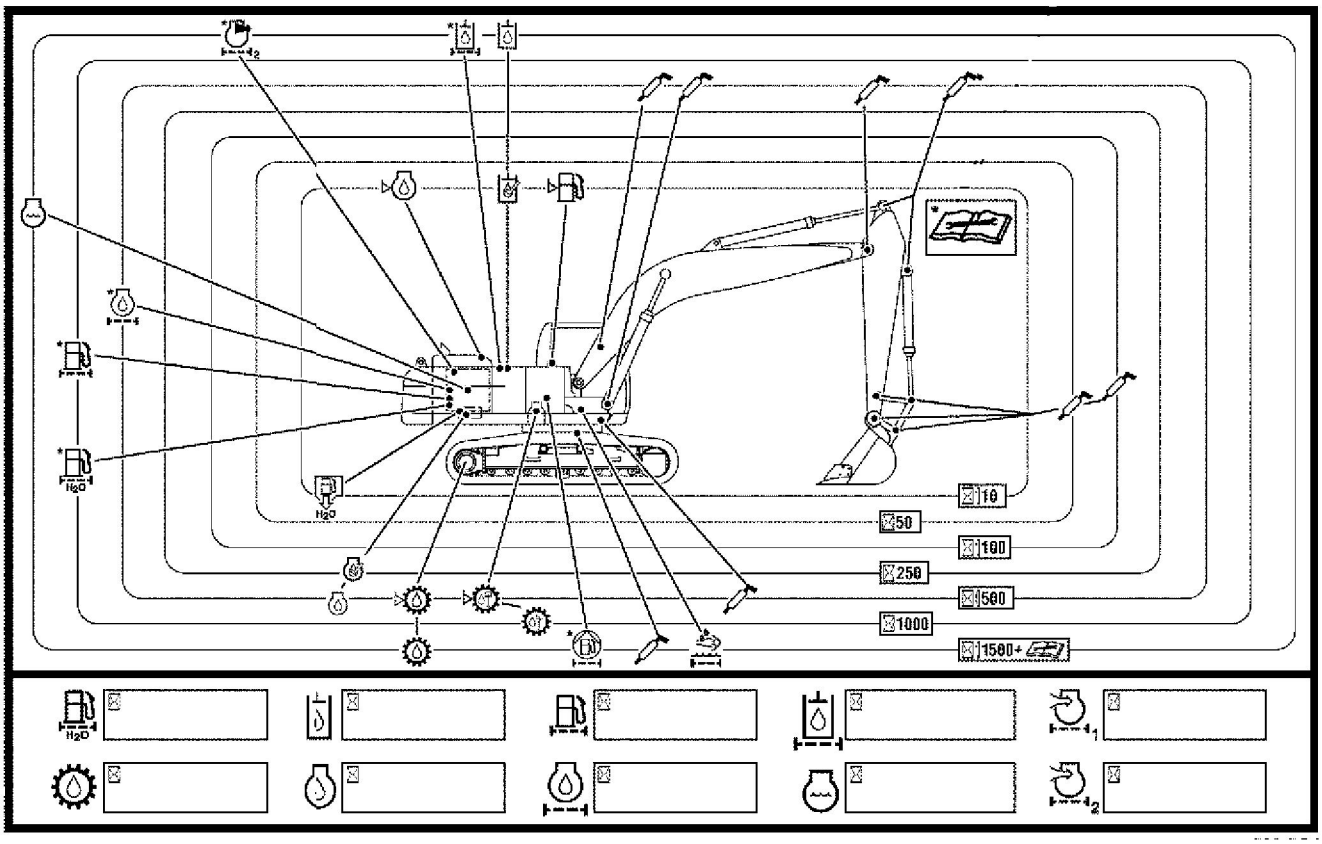

Illustration 621 g06214851

Typical example of a service interval chart

Service hour interval – Hourly interval in which a maintenance procedure should be performed.

Coolant level – Check the coolant level.

Cooling system coolant – Change the ELC (Extended Life Coolant) .

Diesel Exhaust Fluid Filter – Replace the DEF filter.

Engine air filter primary element – Clean or replace the primary air filter element.

Engine air filter secondary element – Replace the secondary air filter element.

Engine oil level – Check the engine oil level.

Engine oil – Change the engine oil.

Engine oil filter – Change the engine oil filter.

Final drive oil level – Check the final drive oil level.

Final drive oil – Change the final drive oil.

Fuel level – Check the fuel level.

Fuel system filter – Replace the fuel system filters.

Fuel system water separator – Drain the water separator.

Fuel system water separator element – Replace the fuel system water separator element.

Fumes Disposal Filter Element – Replace the fumes disposal filter element.

Grease zerk – Lubricate the designated locations.

Hydraulic oil level – Check the hydraulic oil level.

Hydraulic oil – Change the hydraulic oil.

Hydraulic oil filter – Change the hydraulic oil filter.

Swing drive oil level – Check the swing drive oil level.

Swing drive oil – Change the swing drive oil.

i07327966

System Pressure Release

SMCS Code: 1250-553-PX; 1300-553-PX; 1350-553-PX; 5050-553-PX; 6700-553-PX; 7540-553-PX

WARNING

Personal injury or death can result from sudden machine movement.

Sudden movement of the machine can cause injury to persons on or near the machine.

To prevent injury or death, make sure that the area around the machine is clear of personnel and obstructions before operating the machine.

Coolant System

WARNING

Pressurized system: Hot coolant can cause serious burn. To open cap, stop engine, wait until radiator is cool. Then loosen cap slowly to relieve the pressure.

To relieve the pressure from the coolant system, turn off the machine. Allow the cooling system pressure cap to cool. Remove the cooling system pressure cap slowly to relieve pressure.

Hydraulic System

The release of hydraulic pressure in a hydraulic circuit is required before service is performed to that hydraulic circuit. Release the pressure in the following hydraulic circuits before any hydraulic lines are disconnected or removed from that hydraulic circuit.

- Boom hydraulic circuit
- Stick hydraulic circuit
- Bucket hydraulic circuit
- Swing hydraulic circuit
- Travel hydraulic circuit
- Attachment hydraulic circuits (if equipped)
- Pilot hydraulic circuit
- Return hydraulic circuit

Note: Refer to the Disassembly and Assembly Manual for additional information concerning service of the components of specific hydraulic circuits.

Release of Hydraulic Pressure from the Main Hydraulic System

WARNING

Personal injury can result from hydraulic oil pressure and hot oil.

Hydraulic oil pressure can remain in the hydraulic system after the engine has been stopped. Serious injury can be caused if this pressure is not released before any service is done on the hydraulic system.

Make sure all of the work tools have been lowered to the ground, and the oil is cool before removing any components or lines. Remove the oil filler cap only when the engine is stopped, and the filler cap is cool enough to touch with your bare hand.

NOTICE
Care must be taken to ensure that fluids are contained during performance of inspection, maintenance, testing, adjusting, and repair of the product. Be prepared to collect the fluid with suitable containers before opening any compartment or disassembling any component containing fluids.

Refer to Special Publication, PERJ1017, “Dealer Service Tool Catalog” for tools and supplies suitable to collect and contain fluids on Cat ® products.

Dispose of all fluids according to local regulations and mandates.

Perform the following steps to release the hydraulic system pressure from the main hydraulic system.

Note: For additional safety, wrap hydraulic joint with material that could absorb/reduce any residual pressure of oil when released. Loosen the joint slowly, pause, and carefully check hydraulic joint for tensions indicating presence of pressure or spring force in lines or components.

1. Position the machine on level ground.

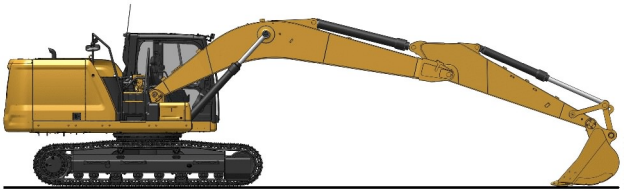

Illustration 622 g06185115

2. Fully retract the stick cylinder rod. Adjust the position of the bucket so that the bucket is parallel to the ground. Lower the boom until the work tool is flat on the ground. Refer to Illustration 622 .

3. Release the system pressure from the implement and swing hydraulic circuits.

Note: Perform Step 3b through Step 3d immediately after the engine is shut off to insure adequate pilot system pressure is available to release the pressure in the hydraulic circuits.

a. Shut off the engine.

b. Turn the engine start switch to the ON position without starting the engine.

c. Place the hydraulic activation control lever in the UNLOCKED position.

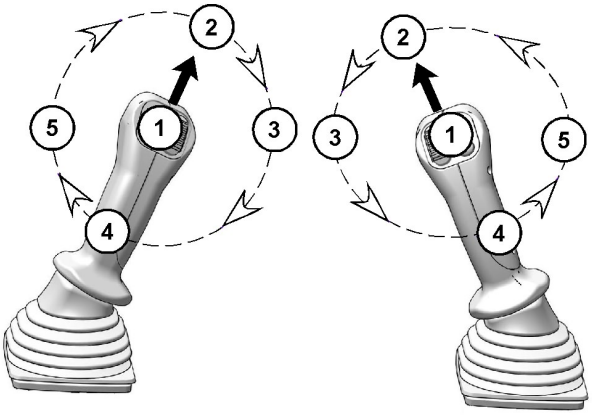

Illustration 623 g06184822

d. Move both joysticks in a circular motion to the FULL STROKE positions multiple times until the pilot accumulator has been exhausted.

Note: Pilot pressure is required to relieve hydraulic system pressure.

e. Place the hydraulic activation control lever in the LOCKED position.

f. Start the engine to recharge the pilot accumulator.

Note: Do not activate any controls when recharging the pilot accumulator.

g. Shut off the engine.

h. Repeat Step 3b through Step 3g until the high-pressure lines have been released.

Note: Each time the accumulator is recharged, start the joysticks at different positions or rotate in the reverse direction. Doing so will ensure that the same circuit is not being relieved each time.

Note: You can also move only the joysticks or pedals of the hydraulic circuit that requires service to the full stroke positions after moving joysticks in a circular motion multiple times. This action will release the high pressure only in that single hydraulic circuit. This action will also release any pressure that might be present in the pilot hydraulic circuit.

4. Release hydraulic system pressure in the attachment circuits.

a. Start the engine to charge pilot accumulator.

b. Shut off the engine.

Note: Perform Step 4c through Step 4e immediately after the engine is shut off to insure adequate pilot system pressure is available to release the pressure in the hydraulic circuits.

c. Turn the engine start switch to the ON position without starting the engine.

d. Place the hydraulic activation control lever in the UNLOCKED position.

e. Activate the switch or pedal for the attachment circuit.

f. Place the hydraulic activation control lever in the LOCKED position.

g. Start the engine to recharge pilot accumulator.

Note: Do not activate any controls when recharging pilot accumulator.

h. Shut off the engine.

i. Repeat Step 4c through Step 4f for each attachment circuit.

5. After releasing the hydraulic pressure in each of the desired hydraulic circuits, place the hydraulic activation control lever in the LOCKED position.

6. Turn the engine start switch to the OFF position.

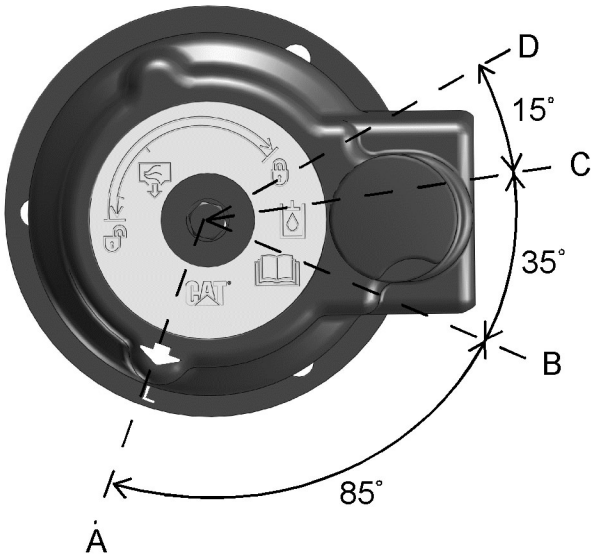

Illustration 624 g06184990

Hydraulic oil tank filler cap

(A) LOCK position
(B) PRESSURE RELEASE - START position
(C) PRESSURE RELEASE - END position
(D) OPEN position

7. Release the pressure that may be present in the return hydraulic circuit with the following procedure. Refer to Illustration 624 for filler cap positions.

a. Turn the filler cap counterclockwise and move the arrow from position (A) to position (B).

b. Release the pressure for a minimum of 45 seconds by moving the arrow from position (B) to position (C).

c. Push down the filler cap and move the arrow from position (C) to position (D).

Note: The travel hydraulic circuit is open to the hydraulic tank. Pressure from the travel circuit is released by releasing pressure from the return circuit.

8. Release the pressure that may be present in the boom circuit to remove the risk of residual pressure in the line. Make sure that the engine start switch is in the OFF position and the pressure in the hydraulic tank has been released.

a. Remove the hydraulic oil tank filler cap.

b. Remove any covers to access the main control valve.

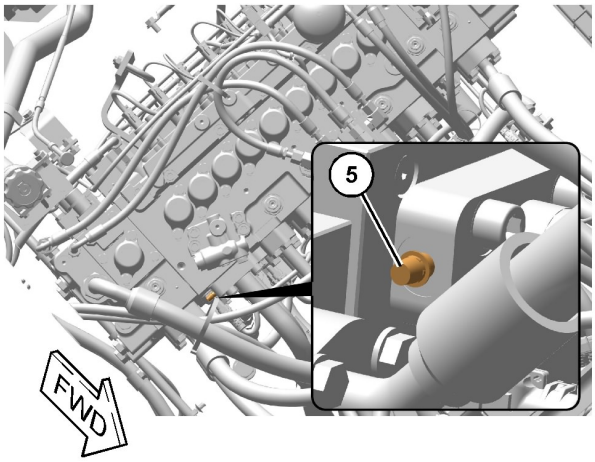

Illustration 625 g06205184

Main control valve

(5) Screw

c. Use a clean hose of adequate length and size and connect to screw (5). Put the other end of the hose in the filler cap opening.

d. Slowly loosen screw (5) by a maximum of 1/2 turn. Loosening the screw allows the hydraulic oil in the boom circuit to drain into the hydraulic tank.

e. Tighten screw (5) to 13 ± 2 N·m (9 ± 1 lb ft).

Note: Refer to the Operation and Maintenance Manual, Equipment Lowering with Engine Stopped for information on lowering the work tool with the engine off.

f. Disconnect the hose from screw (5). Do not allow the oil that is contained in the hose to spill. Drain the oil into a suitable container.

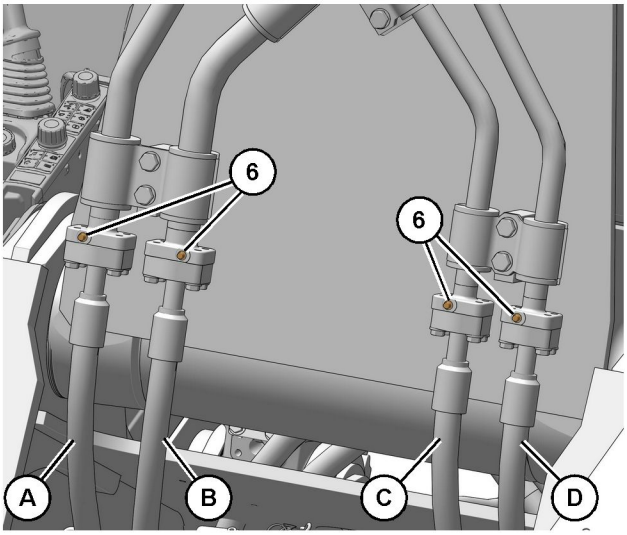

Illustration 626 g06285855

Stick and Bucket circuit locations

(6) Purge Screws (If Equipped)
(A) Circuit A
(B) Circuit B
(C) Circuit C
(D) Circuit D

9. If the purge screws are equipped, perform the following pressure release procedure for each Stick and Bucket circuit. Refer to Illustration 626 and Table 32 for the stick and bucket circuit locations.

Table 32

Stick and Bucket Circuit Locations				
Sales Model	**Circuits**			
	A	**B**	**C**	**D**
336	Stick In	Stick Out	Bucket Close	Bucket Open

a. Connect one end of a drain hose to purge screw (6). Insert the other end of the drain hose into an empty container.

b. Loosen purge screw (6) by 1/2 turn. Hydraulic oil will be drained from the drain hose to the container.

Note: Dispose of drained fluid according to local regulations.

c. Tighten purge screw (6) to a torque of 13 +/- 2 Nm (9 +/- 1 lb ft) after all the hydraulic oil has been drained from the line.

d. Repeat Steps 9a through 9c for all circuits.

e. Remove the drain hose and install hydraulic tank fill cap.

10. The pressure in the multiple hydraulic circuits that require service is now released and lines and components can be disconnected or removed from those hydraulic circuits.

i07746333

Welding on Machines and Engines with Electronic Controls

SMCS Code: 1000; 7000

Do not weld on any protective structure. If it is necessary to repair a protective structure, contact your Cat dealer.

Proper welding procedures are necessary to avoid damage to the electronic controls and to the bearings. When possible, remove the component that must be welded from the machine or the engine and then weld the component. If you must weld near an electronic control on the machine or the engine, temporarily remove the electronic control to prevent heat related damage. The following steps should be followed to weld on a machine or an engine with electronic controls.

1. Turn off the engine. Place the engine start switch in the OFF position.

2. If equipped, turn the battery disconnect switch to the OFF position. If there is no battery disconnect switch, remove the negative battery cable at the battery.

NOTICE
Do NOT use electrical components (ECM or sensors) or electronic component grounding points for grounding the welder.

3. Clamp the ground cable from the welder to the component that will be welded. Place the clamp as close as possible to the weld. Make sure that the electrical path from the ground cable to the component does not go through any bearing. Use this procedure to reduce the possibility of damage to the following components:

- Bearings of the drive train
- Hydraulic components
- Electrical components
- Other components of the machine

4. Protect any wiring harnesses and components from the debris and the spatter which is created from welding.

5. Use standard welding procedures to weld the materials together.

i04807435

Severe Service Application

SMCS Code: 1000

An engine which operates outside of normal conditions is operating in a severe service application.

An engine that operates in a severe service application may need more frequent maintenance intervals in order to maximize the following conditions:

- Reliability
- Service life

The number of individual applications cause the impossibility of identifying all of the factors which may contribute to severe service operation. Consult your Caterpillar dealer for the unique maintenance that may be necessary for your engine.

An application is a severe service application if any of the following conditions apply:

Severe Environmental Factors

- Frequent operation in dirty air
- Frequent operation at an altitude which is above 1525 m (5000 ft)
- Frequent operation in ambient temperatures which are above 32° C (90° F)
- Frequent operation in ambient temperatures which are below 0° C (32° F)

Severe Operating Conditions

- Frequent operation with inlet air which has a corrosive content
- Operation with inlet air which has a combustible content
- Operation which is outside of the intended application
- Operation with a plugged fuel filter
- Extended operation at low idle (more than 20% of hours)

- Frequent cold starts at temperatures below 0° C (32° F)
- Frequent dry starts (starting after more than 72 hours of shutdown)
- Frequent hot shutdowns (shutting down the engine without the minimum of 2 minutes to 5 minutes of cool down time)
- Operation above the engine rated speed
- Operation below the peak torque speed
- Operating with fuel which does not meet the standards for distillate diesel fuel as stated in Special Publication, SEBU6250, “Caterpillar Machine Fluids Recommendations” “Distillate Diesel Fuel”
- Operating with a blend of distillate fuel which contains more than 20 percent biodiesel

Improper Maintenance Procedures (Maintenance Procedures Which May Contribute to a Severe Service Application)

- Inadequate maintenance of fuel storage tanks from causes such as excessive water, sediment, and microorganism growth.
- Extending maintenance intervals beyond the recommended intervals
- Using fluids which are not recommended in Special Publication, SEBU6250, “Caterpillar Machine Fluids Recommendations”
- Extending maintenance intervals for changing the engine oil and engine coolant without S·O·S validation
- Extending maintenance intervals for changing air filters, oil filters, and fuel filters
- Failure to use a water separator
- Using filters which are not recommended by Special Publication, PEWJ0074, “2008 Cat Filter and Fluid Application Guide”
- Storing the engine for more than 3 months but less than 1 yr (For information about engine storage, refer to Special Publication, SEHS9031, “Storage Procedure for Caterpillar Products”)

i08267062

Maintenance Interval Schedule

SMCS Code: 7000

Ensure that all safety information, warnings, and instructions are read and understood before any operation or any maintenance procedures are performed.

The user is responsible for the performance of maintenance. All adjustments, the use of proper lubricants, fluids, filters, and the replacement of components due to normal wear and aging are included. Failure to adhere to proper maintenance intervals and procedures may result in diminished performance of the product and/or accelerated wear of components.

Use mileage, fuel consumption, service hours, or calendar time, WHICH EVER OCCURS FIRST, to determine the maintenance intervals. Products that operate in severe operating conditions may require more frequent maintenance. Refer to the maintenance procedure for any other exceptions that may change the maintenance intervals.

Note: The aftertreatment system can be expected to function properly for the useful life of the engine (emissions durability period), as defined by regulation. All prescribed maintenance requirements must be followed.

Note: Before each consecutive interval is performed, all maintenance from the previous interval must be performed.

The following guidelines should be followed if the service hours are not met:

Items listed between 10 and 100 service hours should be performed at least every 3 months.

Items listed between 250 and 500 service hours should be performed at least every 6 months.

Items listed between 1000 service hours and 2500 service hours should be performed at least every year.

When Required

“ Air Conditioner/Cab Heater Filter (Recirculation) - Inspect/Replace“ 385
“ Battery Electrolyte Level - Check“ 385
“ Battery or Battery Cable - Inspect/Replace“. . . . 386
“ Bucket Linkage - Inspect/Adjust“ 388
“ Bucket Tips - Inspect/Replace“. 390
“ Cab Air Filter (Fresh Air) - Clean/Replace“ 396
“ Camera - Clean“ 397
“ Condenser (Refrigerant) - Clean“ 397
“ DEF Filler Screen - Clean“ 404
“ Diesel Exhaust Fluid - Drain“ 406
“ Diesel Exhaust Fluid - Fill“. 407
“ Engine Air Filter Primary and/or Secondary Element - Replace“ 411
“ Ether Starting Aid Cylinder - Replace“ 421
“ Film (Product Identification) - Clean“ 422
“ Fuel System - Prime“. 424
“ Fuel Tank Strainer - Clean“ 428
“ Fuses - Replace“ 429
“ Light Emitting Diode Lamp (LED) - Replace“. . . 441
“ Oil Filter (Hydraulic Hammer) - Replace“ 442
“ Oil Filter - Inspect“ 443
“ Radiator, Aftercooler and Oil Cooler Cores - Clean“ 446
“ Rollover Protective Structure (ROPS) - Inspect“. 447
“ Track Adjustment - Adjust“ 452
“ Undercarriage - Check“. 455
“ Window - Check“ 455
“ Window Washer Reservoir - Fill“ 456
“ Window Wiper - Inspect/Replace“ 456
“ Windows - Clean“. 456

Every 10 Service Hours or Daily

“ Cooling System Coolant Level - Check“. 401
“ Engine Oil Level - Check“ 415
“ Fuel System Water Separator - Drain“ 427
“ Fuel Tank Water and Sediment - Drain“ 428
“ Hydraulic System Oil Level - Check“ 439
“ Indicators and Gauges - Test“. 441
“ Seat Belt - Inspect“ 447
“ Track Adjustment - Inspect“ 454

“ Travel Alarm - Test“ 454

Every 10 Service Hours or Daily for First 50 Hours

“ Boom and Stick Linkage - Lubricate“ 387
“ Bucket Linkage - Lubricate“ 389
“ Bucket Linkage - Lubricate“ 390

Every 50 Service Hours

“ Bucket Linkage - Lubricate“ 389

Every 100 Service Hours

“ Bucket Linkage - Lubricate“ 390
“ Oil Filter (Hydraulic Hammer) - Replace“ 442

Every 250 Service Hours

“ Cooling System Coolant Sample - Obtain“ 402
“ Engine Oil Sample - Obtain“ 416

Initial 500 Service Hours

“ Engine Oil and Filter - Change“. 416
“ Final Drive Oil - Change“. 422
“ Swing Drive Oil - Change“. 448

Every 500 Service Hours

“ Boom and Stick Linkage - Lubricate“ 387
“ Final Drive Oil Level - Check“ 423
“ Final Drive Oil Sample - Obtain“ 424
“ Hydraulic System Oil Sample - Obtain“ 441
“ Pump Coupling Oil Level - Check“ 445
“ Swing Bearing - Lubricate“ 448
“ Swing Drive Oil Level - Check“ 450
“ Swing Drive Oil Sample - Obtain“ 450

Every 1000 Service Hours

“ Battery - Clean“ 385
“ Battery Hold-Down - Tighten“ 386
“ Belt - Inspect/Adjust/Replace“. 386
“ Engine Oil and Filter - Change“. 416
“ Fuel System Primary Filter (Water Separator) Element - Replace“ 425
“ Fuel System Secondary Filter - Replace“. 426
“ Swing Drive Oil - Change“. 448

Every 2000 Service Hours

“ Final Drive Oil - Change“. 422
“ Fuel Cap Filter - Replace“ 424
“ Swing Gear - Lubricate“. 451

Every 2500 Service Hours

“ Engine Valve Lash - Check“ 420

Every 3000 Service Hours

“ Hydraulic System Oil Filter (Return) - Replace“ 437

Every 3 Years

“ Seat Belt - Replace“. 448

Every 5000 Service Hours

“ Diesel Exhaust Fluid Filter - Replace“ 408
“ Diesel Exhaust Fluid Injector - Replace“ 409
“ Diesel Particulate Filter - Clean“ 411
“ Pump Coupling Oil - Change“ 444
“ Receiver Dryer (Refrigerant) - Replace“. 446

Every 6000 Service Hours or 3 Years

“ Cooling System Coolant Extender (ELC) - Add“ 400
“ Hydraulic System Oil - Change“ 432

Every 10 000 Service Hours

“ DEF Manifold Filters - Replace“ 405

Every 12 000 Service Hours or 6 Years

“ Cooling System Coolant (ELC) - Change“ 398

i06954215

Air Conditioner/Cab Heater Filter (Recirculation) - Inspect/ Replace

SMCS Code: 1054-510-A/C; 1054-040-A/C

NOTICE
An air recirculation filter element plugged with dust will result in decreased performance and service life to the air conditioner or cab heater.

To prevent decreased performance, clean the filter element, as required.

The air conditioner filter is on the lower left side of the cab behind the seat.

1. Slide the operator seat forward.

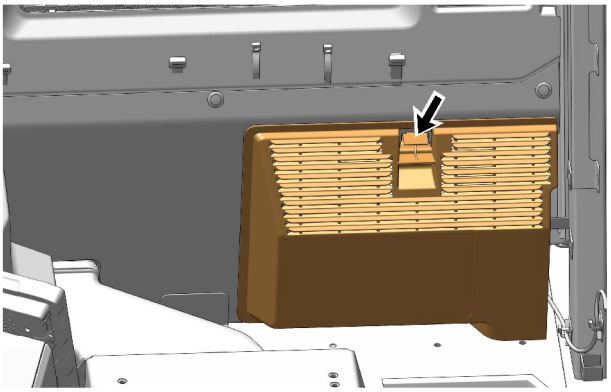

Illustration 627 g06181599

2. Release the cover latch.

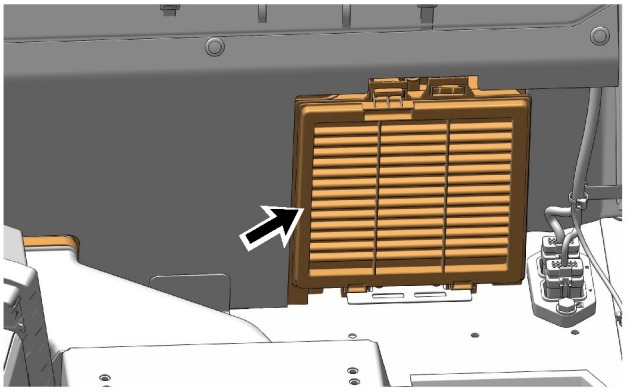

Illustration 628 g06181603

3. Slide the filter element upward.

4. Tap the air filter to remove the dirt. Do not use compressed air to clean the filter.

5. After you clean the filter element, inspect the filter element. If the filter element is damaged or badly contaminated, use a new filter element. Make sure that the filter element is dry.

6. Install the filter element.

7. Install the cover.

NOTICE
Failure to reinstall the filter element for the air conditioning system will contaminate and damage the system components.

i00934864

Battery - Clean

SMCS Code: 1401-070

Clean the battery surface with a clean cloth. Keep the terminals clean and keep the terminals coated with petroleum jelly. Install the post cover after you coat the terminal post with petroleum jelly.

i06019968

Battery Electrolyte Level - Check

SMCS Code: 1401-535-FLV; 1401; 1401-535

WARNING

All lead-acid batteries contain sulfuric acid which can burn the skin and clothing. Always wear a face shield and protective clothing when working on or near batteries.

Note: If the machine is operated in extreme temperatures, check the electrolyte level Every 500 Service Hours or 3 months.

When the engine is not run for long periods of time or when the engine is run for short periods, the batteries may not fully recharge. Ensure a full charge in order to help prevent the battery from freezing.

1. Clean the battery surface with a clean cloth. Clean the terminals and the cable clamps. Coat the clamps and the terminals with silicone lubricant or petroleum jelly. Install the post cover.

2. Inspect the electrolyte level in each battery cell. Maintain the electrolyte level to the bottom of the filler openings. Use distilled water. If distilled water is not available, use clean drinking water.

i00934872

Battery Hold-Down - Tighten

SMCS Code: 7257

Tighten the hold-downs for the battery in order to prevent the batteries from moving during machine operation.

i04064489

Battery or Battery Cable - Inspect/Replace

SMCS Code: 1401; 1401-561; 1401-040; 1401-510; 1402-040; 1402-510

WARNING

Personal injury can result from battery fumes or explosion.

Batteries give off flammable fumes that can explode. Electrolyte is an acid and can cause personal injury if it contacts the skin or eyes.

Prevent sparks near the batteries. Sparks could cause vapors to explode. Do not allow jumper cable ends to contact each other or the engine. Improper jumper cable connections can cause an explosion.

Always wear protective glasses when working with batteries.

1. Turn all of the switches to the OFF position. Turn the engine start switch key to the OFF position.
2. Turn the battery disconnect switch to the OFF position. Remove the key.
3. Disconnect the negative battery cable at the battery.
4. Disconnect the positive battery cable at the battery.
5. Disconnect the battery cables at the battery disconnect switch. The battery disconnect switch is connected to the machine frame.
6. Make necessary repairs or replace the battery.
7. Connect the battery cable at the battery disconnect switch.
8. Connect the positive battery cable of the battery.
9. Connect the negative battery cable of the battery.
10. Install the key and turn the battery disconnect switch to the ON position.

i07246860

Belt - Inspect/Adjust/Replace

SMCS Code: 1357-040; 1357-510; 1357-025; 1397-025; 1397-040; 1397-510

Note: This engine is equipped with a belt tightener that automatically adjusts the belt to the correct tension.

1. Unlatch the engine hood and raise the engine hood.

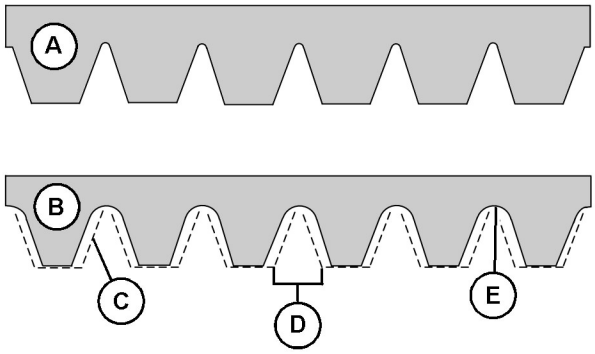

Illustration 629 g06206193

(A) New belt
(B) Worn belt

2. Inspect the condition of the serpentine belt. Over time the belt ribs will lose material (C). The space between the ribs will increase (D). The loss of material will cause the pulley sheave to contact the belt valley. This will lead to belt slippage and accelerated wear (E). Replace the belt if the belt is worn or frayed.
3. If the belt requires replacement, perform Step 3a through Step 3f.
   a. Remove the upper fan guard.

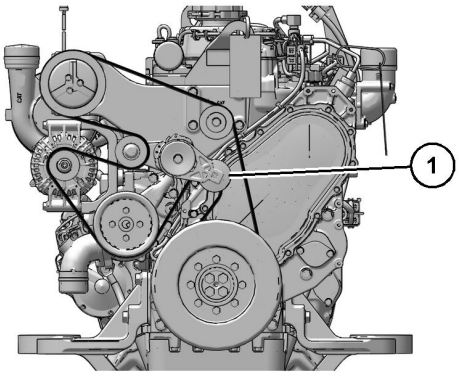

Illustration 630 g06265252

(1) Belt tensioner

b. Rotate the belt tensioner (1) clockwise to remove the belt.

c. Remove the belt.

d. Install a new belt.

e. Rotate the belt tensioner clockwise to install the belt.

f. Install the upper fan guard.

g. Lower the engine hood and latch the engine hood.

i07531958

Boom and Stick Linkage - Lubricate

SMCS Code: 6501-086; 6502-086

Note: Caterpillar recommends the use of 5% molybdenum grease for lubricating the boom, and stick linkage. Refer to Special Publication, SEBU6250, “Caterpillar Machine Fluids Recommendations” for more information on molybdenum grease.

Apply lubricant through all fittings after operation under water.

Wipe all fittings before you apply lubricant.

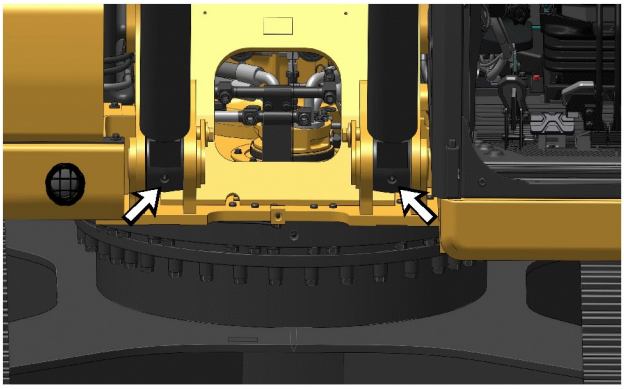

Illustration 631 g06183509

1. Apply lubricant through the fitting at the base of each boom cylinder.

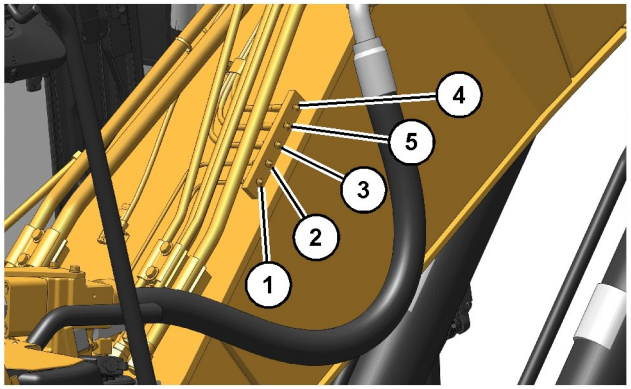

Illustration 632 g06183534

Note: Your machine may have the fittings mounted in a vertical position as shown in the illustration above, or your machine may have the fittings mounted in a horizontal position.

2. The fittings are at the base of the boom. The fittings can be serviced from the platform on the fuel tank. To lubricate the lower boom bearings, apply lubricant through fittings (1) and (2).

3. Apply lubricant through fittings (3) and (4) for the boom cylinder rod.

4. Apply lubricant through fitting (5) for the stick cylinder head.

Note: To ensure proper lubrication of the lower boom bearings and of the boom cylinder rod end bearings, lubricant should be applied through fittings (1), (2), (3), and (4). Apply lubricant first when the boom is raised and any attachment is suspended. Then apply lubricant when the boom is lowered and the attachment is rested on the ground with a slight downward pressure.

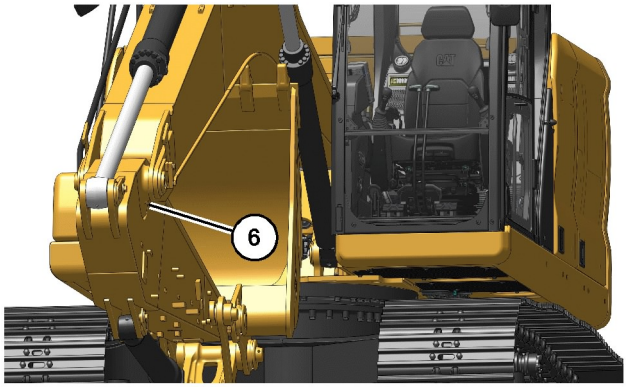

Illustration 633 g06183854

5. Apply lubricant through fitting (6). Fitting (6) is at the connection point of the boom and of the stick.

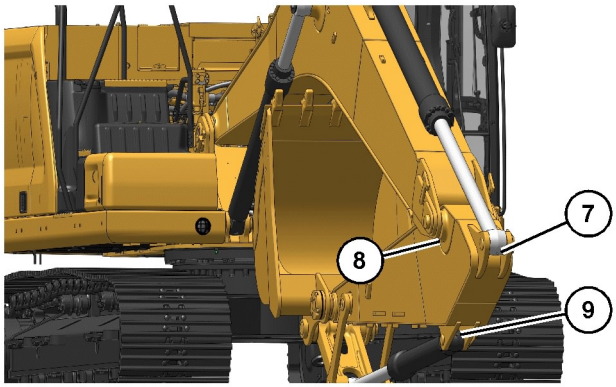

Illustration 634 g06183864

6. Apply lubricant through fitting (7) on the stick cylinder rod. Apply lubricant through fitting (8) at the connection point of the boom and of the stick. Apply lubricant through fitting (9) at the bucket cylinder head end.

i07313700

Bucket Linkage - Inspect/ Adjust

SMCS Code: 6513-025; 6513-040

WARNING

Unexpected machine movement can cause injury or death.

To avoid possible machine movement, move the hydraulic lockout control to the LOCKED position and attach a Special Instruction, SEHS7332, "Do Not Operate" or similar warning tag to the hydraulic lockout control.

NOTICE
Improperly adjusted bucket clearance could cause galling on the contact surfaces of the bucket and stick, resulting in excessive noise and/or damaged O-ring seals.

Illustration 635 g06279682
Area for linkage adjustment

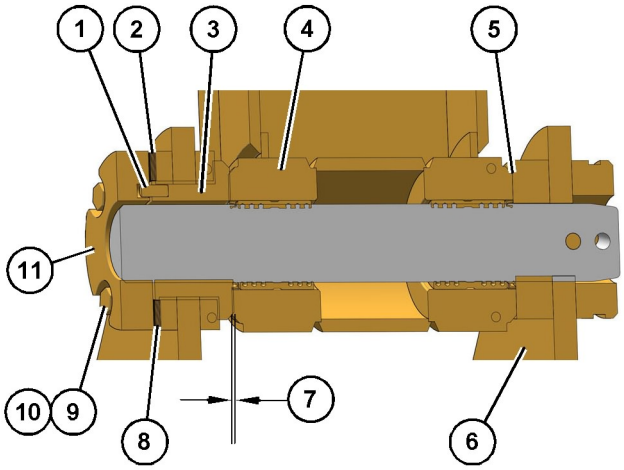

Illustration 636 g06185866

(1) Pin
(2) Shims
(3) Flange
(4) Stick boss
(5) No gap
(6) Bucket boss
(7) Bucket clearance
(8) Location
(9) Bolts
(10) Washers
(11) Plate

The clearance of the bucket control linkage on this machine can be adjusted by shimming. If the gap between the bucket and the stick becomes excessive, adjust bucket clearance (7) to 0.5 to 1 mm (0.02 to 0.04 inch).

Two shims of different thickness are used at location (8). The thicknesses of the shims are 0.5 mm (0.02 inch) and 1.0 mm (0.04 inch).

1. Position the machine on a level surface and lower the bucket to the ground.
2. Slowly operate the swing control lever until stick boss (4) and the bucket boss (6) are in full face contact at no gap (5). This will help to determine the total clearance of the connection point of the stick and of the bucket.
3. Move the hydraulic lockout control to the LOCKED position. Stop the engine.
4. Measure bucket clearance (7), which is the existing total clearance.
5. Determine the number of shims that need to be removed from shims (2) by using the following calculation:

   Subtract 0.5 mm (0.02 inch) or 1.0 mm (0.04 inch) from bucket clearance (7).
6. Remove the appropriate number of shims at location (8) to meet the above thickness. Make sure that you use a minimum of three 0.5 mm (0.02 inch) shims. To remove the shims, remove bolts (9), washers (10), and plate (11).
7. After the correct number of shims has been removed and pin (1) is aligned with the pin hole, install plate (11), bolts (9), and washers (10). Tighten the bolts to 240 ± 40 N·m (175 ± 30 lb ft).
8. After installation, make sure that bucket clearance (7) is still correct.

i07377602

Bucket Linkage - Lubricate
(TB Bucket Family)

SMCS Code: 6513-086

Note: Use this procedure for the TB bucket family. Lubricate the bucket linkage at the maintenance interval of every 50 service hours.

Note: Caterpillar recommends the use of 5% molybdenum grease for lubricating the bucket linkage. Refer to Special Publication, SEBU6250, “Caterpillar Machine Fluids Recommendations” for more information on grease.

Wipe all fittings before you apply lubricant.

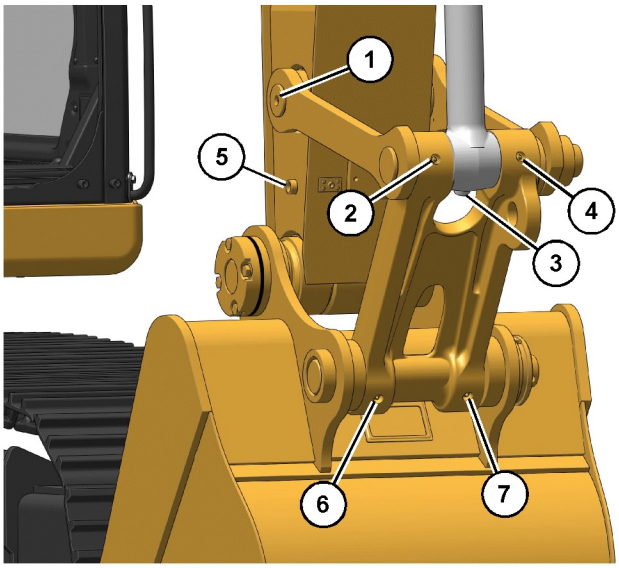

Illustration 637 g06183336

Note: Completely fill all cavities of the bucket control linkage with grease when you initially install a bucket.

1. Apply lubricant through fittings for the linkages (1), (2), (3), and (4).
2. Apply lubricant through fittings for the bucket (5), (6), and (7).

Note: Service the above fittings after you operate the bucket under water.

i07378295

Bucket Linkage - Lubricate (DB Bucket Family)

SMCS Code: 6513-086

Note: Use this procedure for the DB bucket family. Lubricate the bucket linkage at the maintenance interval of every 100 service hours.

Note: Caterpillar recommends the use of 5% molybdenum grease for lubricating the bucket linkage. Refer to Special Publication, SEBU6250, “Caterpillar Machine Fluids Recommendations” for more information on grease.

Wipe all fittings before you apply lubricant.

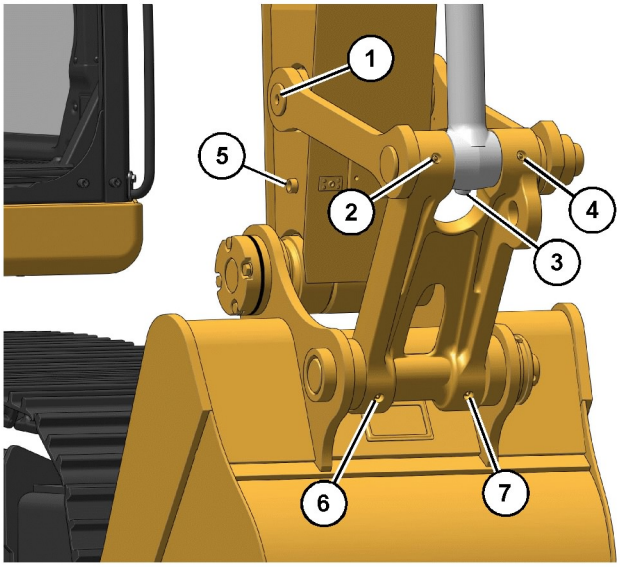

Illustration 638 g06183336

Note: Completely fill all cavities of the bucket control linkage with grease when you initially install a bucket.

1. Apply lubricant through fittings for the linkages (1), (2), (3), and (4).
2. Apply lubricant through fittings for the bucket (5), (6), and (7).

Note: Service the above fittings after you operate the bucket under water.

i08059817

Bucket Tips - Inspect/Replace

SMCS Code: 6805-510; 6805-040

WARNING

Personal injury or death can result from bucket falling.

Block the bucket before changing bucket tips or side cutters.

K Series GET Drive-through System Bucket Tips

Note: To maximize the life of the bucket tip and the penetration of the bucket tip, the bucket tip can be rotated.

Illustration 639 g01055179
Acceptable wear

Illustration 640 g01055196
Replace this bucket tip.

Check the bucket tips for wear. If the bucket tip has a hole, replace the bucket tip.

Removal Procedure

WARNING

Retainer pin, when struck with force, can fly out and cause injury to nearby people.

Make sure the area is clear of people when driving retainer pins.

To avoid injury to your eyes, wear protective glasses when striking a retainer pin.

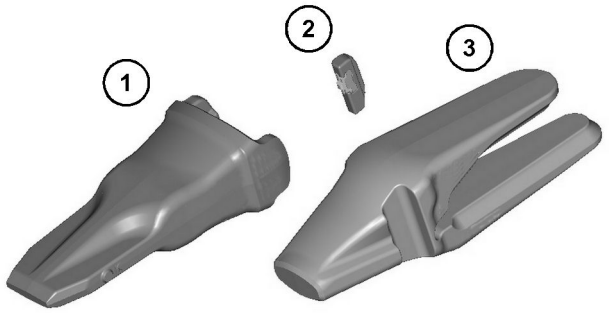

Illustration 641 g06528662

(1) Bucket tip
(2) Retainer
(3) Adapter

Note: Retainers are often damaged during the removal process. Caterpillar recommends the installation of a new retainer when bucket tips are rotated or replaced.

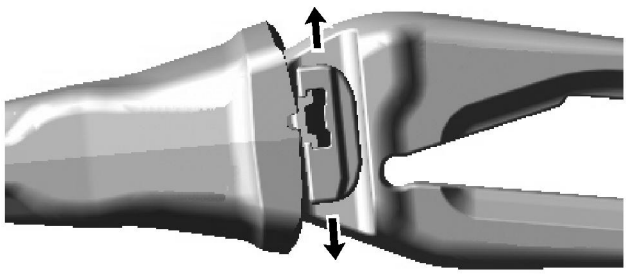

Illustration 642 g01054386

Internal view

1. Use a hammer and a punch to drive out the retainer. The retainer can be removed from the top of the bucket tip or from the bottom of the bucket tip.
2. Remove the bucket tip from the adapter with a slight counterclockwise rotation.

Installation Procedure

1. Clean the adapter, if necessary.
2. Install the new bucket tip or the rotated bucket tip onto the adapter with a slight clockwise rotation.

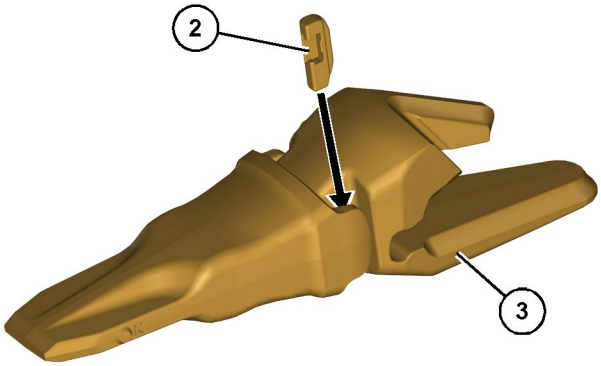

Illustration 643 g06528668

Proper location for installing the retainer

3. The retainer can be installed from the top of the bucket tip or from the bottom of the bucket tip. Use a hammer and a 1 inch X 1 inch X 8 inch steel bar stock to drive retainer (2) into adapter (3).

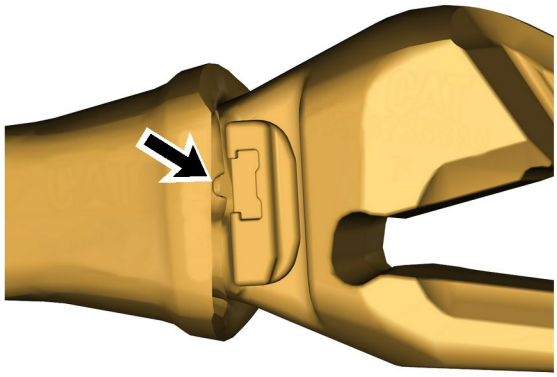

Illustration 644 g06528672

Internal View

The latch of the retainer is properly seated in the recess of the bucket tip.

Illustration 645 g06528674

A properly installed retainer does not extend beyond the ear of the bucket tip.

4. The retainer is properly seated if the retainer can be moved slightly by the technicians hand. If the retainer cannot be moved, adjust the retainer, as needed. The ends of the retainer should not extend beyond the ear of the bucket tip.

J Series GET Bucket Tips

WARNING

Block the bucket before changing the bucket teeth.

To prevent possible injury to the eyes, wear a protective face shield when striking the pin.

The pin, when struck, can fly out and cause injury to nearby personnel.

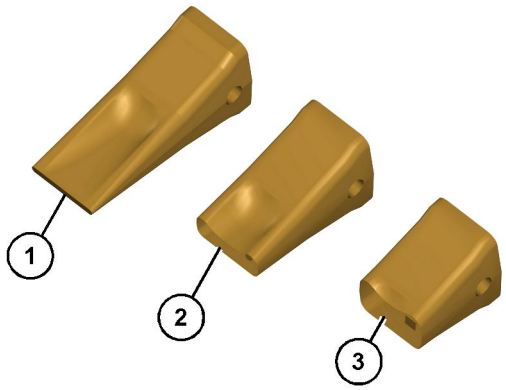

Illustration 646 g06528680

(1) Usable tip
(2) Replaceable bucket tip
(3) Overworn tip

Check the bucket tips for wear. If the bucket tip has a hole, replace the bucket tip.

1. Remove the pin from the bucket tip. The pin can be removed by one of the following methods.

- Use a hammer and a punch from the retainer side of the bucket to drive out the pin.
- Use a Pin-Master. Follow Step 1a through Step 1c for the procedure.

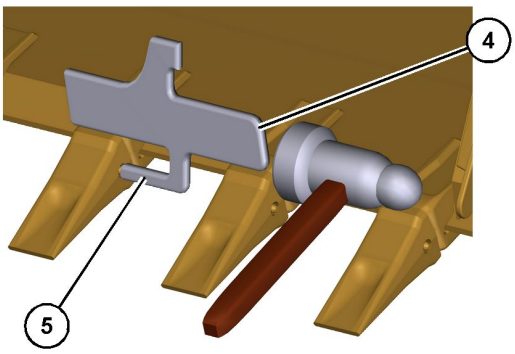

Illustration 647 g06214793

(4) Back of Pin-Master
(5) Extractor

a. Place the Pin-Master on the bucket tip.

b. Align extractor (5) with the pin.

c. Strike the Pin-Master at the back of the tool (4) and remove the pin.

Note: Discard the old pin and the retainer assembly. When you change tips, use a new pin and a new retainer assembly. Refer to the appropriate parts manual for your machine.

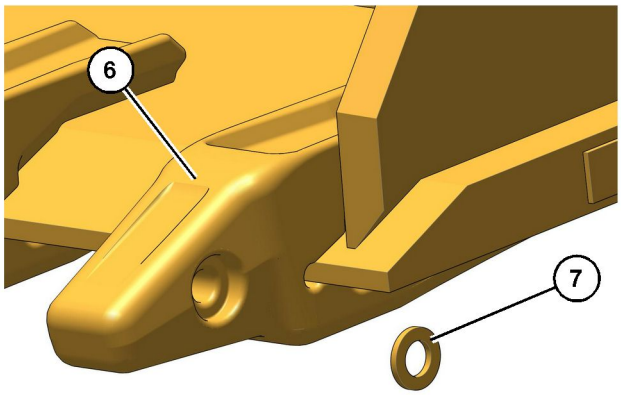

Illustration 648 g06214921

(6) Retainer assembly
(7) Adapter

2. Clean the adapter and the pin.

3. Fit retainer assembly (6) into the counterbore that is in the side of adapter (7). Make sure that the face of the retainer assembly with the marking “OUTSIDE” is visible.

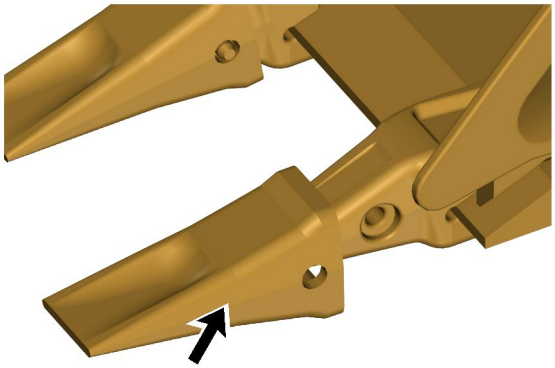

Illustration 649 g06214795

4. Install the new bucket tip onto the adapter.

Note: The bucket tips can be rotated by 180 degrees to allow the tip to wear evenly. You may also move the tips from the outside teeth to the inside teeth. Check the tips often. If wear is present on the tips, rotate the tips. The outside teeth generate the most wear.

5. Drive the pin through the bucket tip. The pin can be installed by using one of the following methods:

- From the same side of the retainer, drive the pin through the bucket tip, the retainer assembly, and the adapter.
- Use a Pin-Master. Follow Step 5a through Step 5e for the procedure.

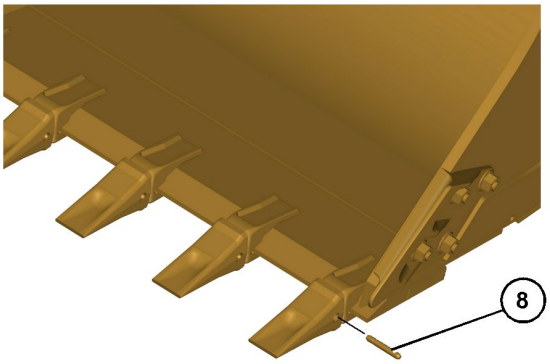

Illustration 650 g06214803

(8) Pin

a. Insert pin (8) through the bucket tip.

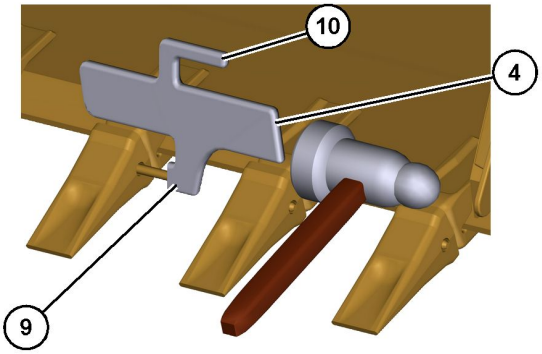

Illustration 651 g06214807

b. Place the Pin-Master over the bucket tips so that the pin will fit into the counterbore of the pin holder (9).

c. Strike the Pin-Master with a hammer at the back of the tool (4) to insert the pin.

d. Slide pin holder (9) away from the pin and rotate the tool slightly to align pin setter (10) with the pin.

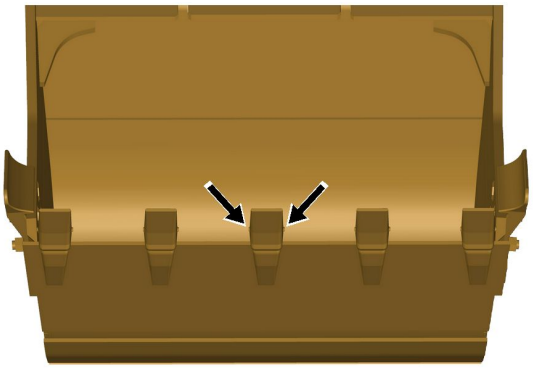

Illustration 652 g06214812

Final assembly of pin into bucket tip

e. Strike the end of the tool until the pin is fully inserted.

Bucket Tips (Cat® Advansys) - If Equipped

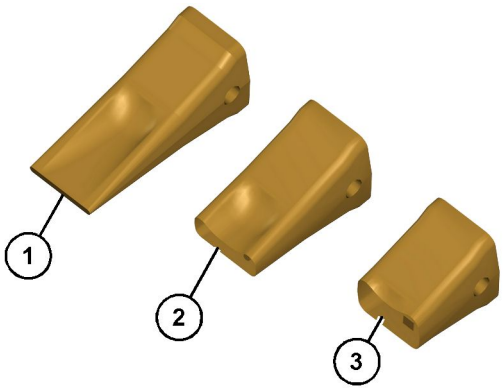

Illustration 653 g06528680

(1) Usable tip
(2) Replaceable bucket tip
(3) Overworn tip

Check the bucket tips for wear. If the bucket tip has a hole, replace the bucket tip.

Removal

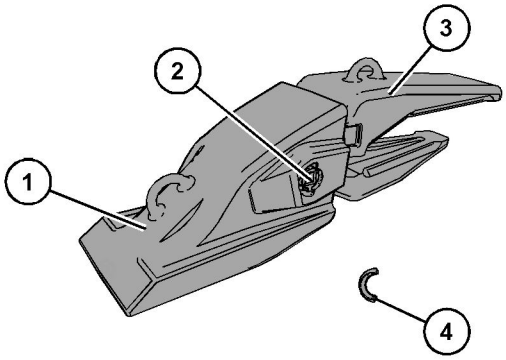

Illustration 654 g06528701

(1) Bucket Tip
(2) Retainer
(3) Adapter
(4) Compression Sleeve

1. Use a 1/2" ratchet and rotate the retainer (2) 180 degrees to the unlocked position.
2. Remove the bucket tip (1) from adapter (3).
3. Clean adapter (3).

Installation

1. Clean the adapter and the area around the latch, if necessary.
2. Install the new bucket tip (1) onto the adapter (3).

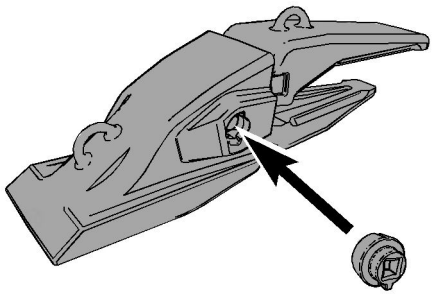

Illustration 655 g06528728

3. Use a 1/2" ratchet to rotate the retainer (2) 180 degrees to the locked position.

Side Cutters

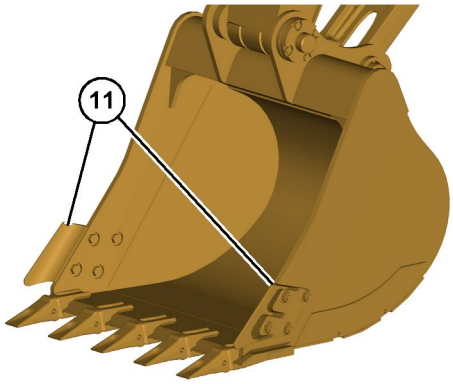

Illustration 656 g06214814

Bucket With Side Cutters

1. Remove the mounting bolts and the side cutters (11).

2. Clean the mounting surface of the side plate on the bucket and of the side cutter. Remove any burrs or protrusions on the mating surfaces.

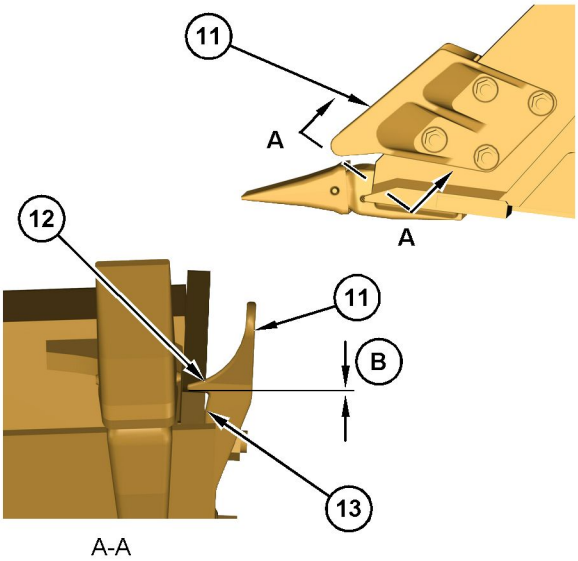

Illustration 657 g06214887

(12) Shear ledge on a side cutter
(13) Side plate on a bucket
(B) 0.0 mm (0.0 inch)

Note: Some side cutters may be rotated for additional wear.

3. Install the side cutter.

Note: Certain bolts may require thread compound.

4. Hand tighten the bolts.

5. Make sure that there is not a gap between the side plate on the bucket and the shear ledge on the side cutter.

6. Torque the mounting bolts to the correct specification.

Side Protectors (If Equipped)

Inspect the wear of the side protector. When too much wear is present, replace the protector.

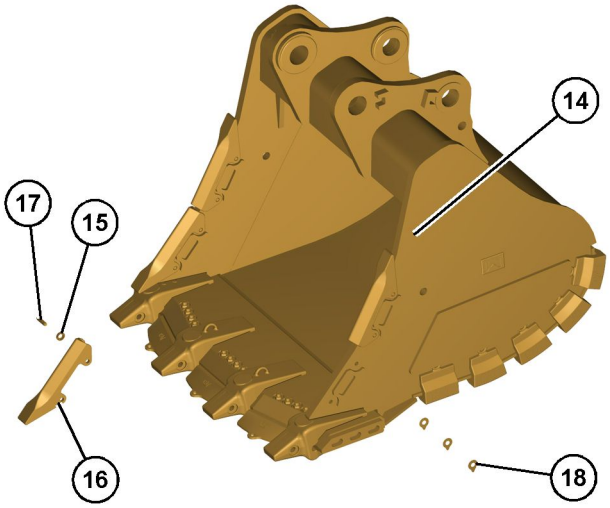

Illustration 658 g06219766

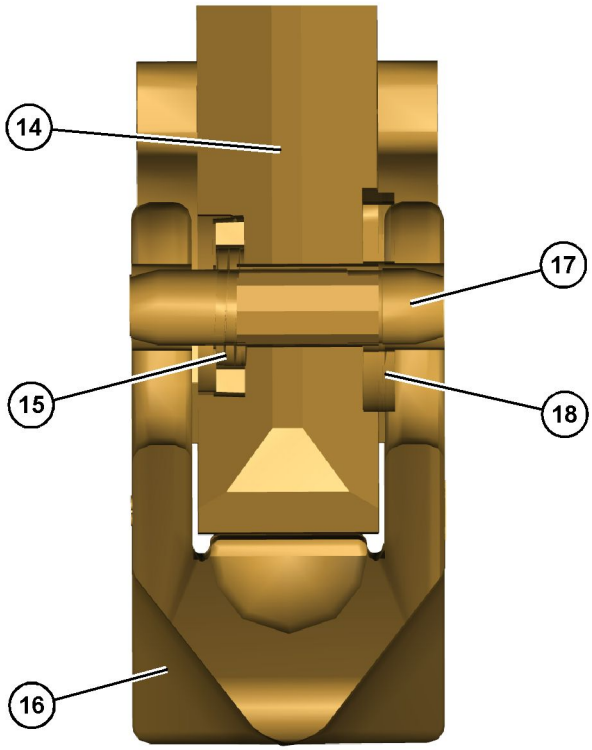

Illustration 659 g06219767

(14) Side plate
(15) Retainer
(16) Side protector
(17) Pin
(18) Shim

1. Hit pin (17) from the side of the bucket without the retainer to remove side protector (16) from side plate (14).
2. Clean side protector (16), pin (17), retainer(15), and side plate (14) before installation.

Note: Lateral clearance between the side plate and the side protector should not exceed 1 mm (0.04 inch). Shims (18) may be required to decrease the lateral clearance which will decrease movement. Install the shims between the side plate and the side protector on the opposite side of the retainer.

3. Put retainer (15) in side plate (14).
4. Align two pin holes of the new protector and the side plate. Hit the pin from the retainer side of the bucket.

Note: If the pin and/or the retainer are worn, replace the pin and/or the retainer.

i07092323

Cab Air Filter (Fresh Air) - Clean/Replace

SMCS Code: 7342-070; 7342-510

The cab air filter is on the left side of the cab.

1. Use the ignition key to open the access panel.

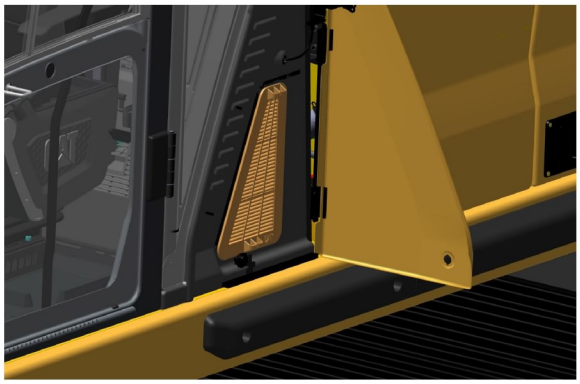

Illustration 660 g06182115

2. Remove air filter (1).
3. Tap the air filter to remove the dirt. Do not use compressed air to clean the filter.
4. After you clean the air filter, inspect the air filter. If the air filter is damaged or badly contaminated, use a new air filter.
5. Install the air filter.
6. Close and lock the access panel.

i07103676

Camera - Clean

SMCS Code: 7348-070

WARNING

Failure to use an appropriate external ladder or an appropriate platform for direct access to the rear view camera could result in slipping and falling which could result in personal injury or death. Be sure to use an appropriate external ladder or an appropriate platform for direct access to the rear view camera.

The machine's counterweight and the engine hood are not approved as a maintenance platforms.

WARNING

Unexpected machine movement can cause injury or death.

In order to avoid possible machine movement, move the hydraulic lockout control to the LOCKED position and attach a Special Instruction, SEHS7332, "Do Not Operate" or similar warning tag to the hydraulic lockout control.

Note: When you access the camera for cleaning, be sure to observe safe procedures for access. Maintain a three-point contact and/or use a body harness.

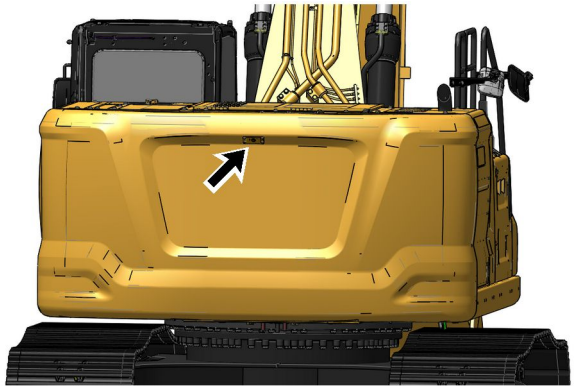

Illustration 661 g06224689

The rear view camera is on top of the counterweight.

If necessary, use a damp cloth to clean the glass of the camera. The camera is sealed. The camera is not affected by a wash with high-pressure spray.

Note: Alternatively, cameras may be cleaned from ground level by using a wash with a high-pressure spray or a damp rag on a wand.

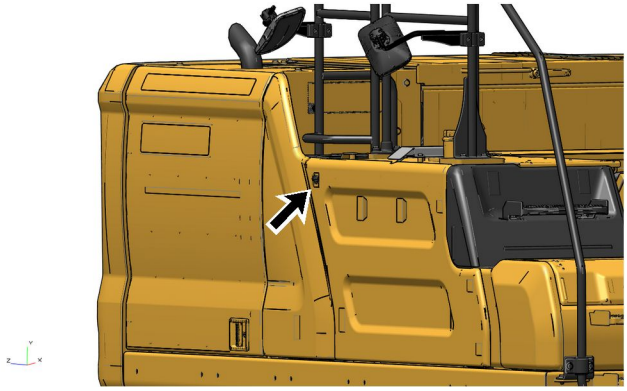

Illustration 662 g06224690

If equipped, clean the side view camera as well.

i06969907

Condenser (Refrigerant) - Clean

SMCS Code: 1805-070

NOTICE

If excessively dirty, clean condenser with a brush. To prevent damage or bending of the fins, do not use a stiff brush.

Repair the fins if found defective.

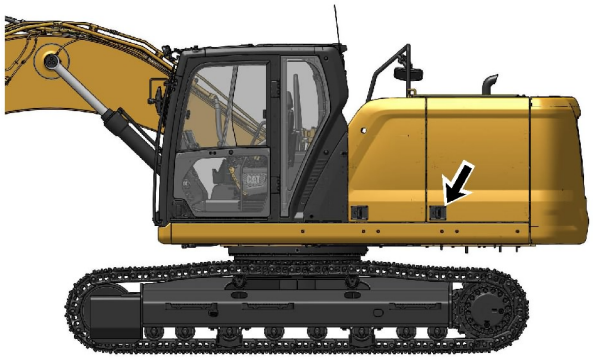

Illustration 663 g06179792

1. Open the access door on the left side of the machine. The condenser is located in front of the radiator.

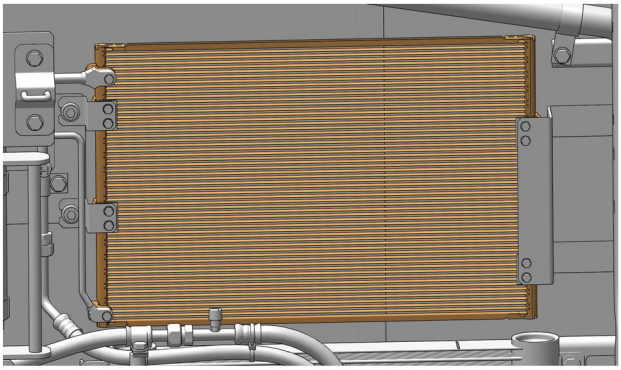

Illustration 664 g06183025

2. Inspect the condenser for debris. Clean the condenser, if necessary.

3. Use clean water to wash off all dust and dirt from the condenser.

4. Close the access door.

i07313722

Cooling System Coolant (ELC) - Change

SMCS Code: 1350-044

WARNING

Engine hood and engine hood parts can be hot while engine is running or immediately after engine shutdown. Hot parts or hot components can cause burns or personal injury. Do not allow these parts to contact your skin, when engine is running or immediately after engine shutdown. Use protective clothing or protective equipment to protect your skin.

WARNING

Personal injury can result from hot coolant, steam and alkali.

At operating temperature, engine coolant is hot and under pressure. The radiator and all lines to heaters or the engine contain hot coolant or steam. Any contact can cause severe burns.

Remove cooling system pressure cap slowly to relieve pressure only when engine is stopped and cooling system pressure cap is cool enough to touch with your bare hand.

Do not attempt to tighten hose connections when the coolant is hot, the hose can come off causing burns.

Cooling System Coolant Additive contains alkali. Avoid contact with skin and eyes.

NOTICE

Do not change the coolant until you read and understand the cooling system information in Special Publication, SEBU6250, “Caterpillar Machine Fluids Recommendations”.

Failure to do so could result in damage to the cooling system components.

NOTICE

Mixing ELC with other products will reduce the effectiveness of the coolant.

This could result in damage to cooling system components.

If Caterpillar products are not available and commercial products must be used, make sure they have passed the Caterpillar EC-1 specification for premixed or concentrate coolants and Caterpillar Extender.

Note: This machine was filled at the factory with Caterpillar Extended Life Coolant.

If the coolant in the machine is changed to Extended Life Coolant from another type of coolant, see Special Publication, SEBU6250, “Caterpillar Machine Fluids Recommendations”.

1. Unlatch and raise the engine service door.

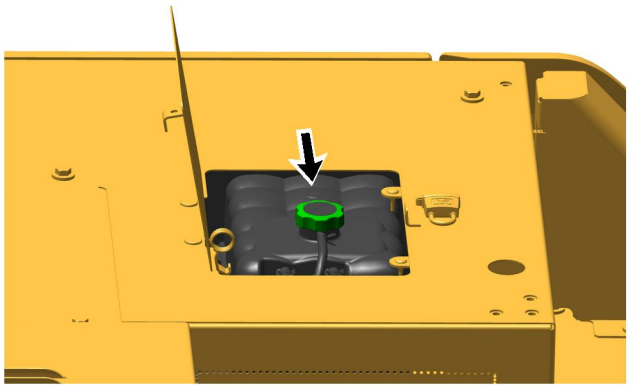

Illustration 665 g06279740

2. Slowly loosen the pressure cap that is on the coolant reservoir to release pressure from the cooling system.

3. Remove the pressure cap.

4. Inspect the o-ring of the cooling system pressure cap. If the o-ring is damaged, replace the pressure cap.

Note: Refer to Operation and Maintenance Manual, “General Hazard Information” for information that pertains to containing fluid spillage.

5. Open the rear access door on the left side of the machine.

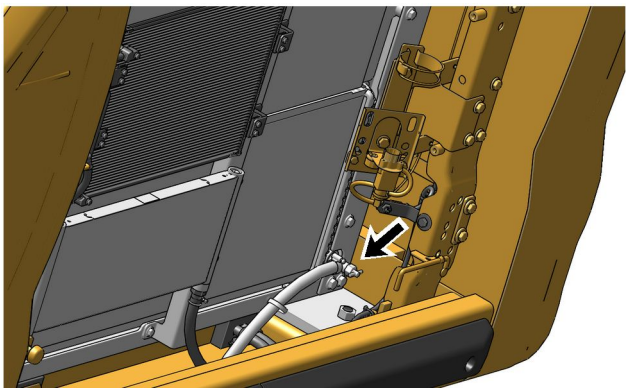

Illustration 666 g06279744

6. Open the drain valve and allow the coolant to drain into a suitable container. The drain valve is on the bottom of the radiator.

7. Flush the cooling system. Follow Step 7a through Step 7h to flush the cooling system.

a. Close the drain valve.

b. Fill the cooling system with clean water.

c. Install the pressure cap.

NOTICE
Do not run the engine with plain water in the cooling system for more than 5 min. The water may vaporize and trapped air may damage the NRS cooler.

d. Start the engine and run the engine until the engine reaches operating temperature.

e. Stop the engine and allow the engine to cool.

f. Loosen the pressure cap slowly to relieve any pressure in the cooling system.

g. Open the drain valve that is on the bottom of the radiator and allow the coolant to drain into a suitable container.

h. Flush the radiator with clean water until the draining water is transparent.

8. Close the drain valve.

9. Add the Extended Life Coolant. Refer to the following topics:

- Special Publication, SEBU6250, “Caterpillar Machine Fluids Recommendations”
- Operation and Maintenance Manual, “Capacities (Refill)”

10. After the cooling system has been filled, perform the following procedures during initial start-up:

a. Start the engine without the filler cap.

b. Run the engine at low idle for 10 minutes.

c. Then, increase the engine speed to a high idle until the water temperature regulator is open and the coolant level is stabilized.

d. Maintain the coolant at the proper level as the water temperature regulator opens, and the air is purged from the cooling system and NRS cooler. Refer to Operation and Maintenance Manual, “Cooling System Coolant Level - Check”.

11. Install the cooling system pressure cap.

12. Stop the engine.

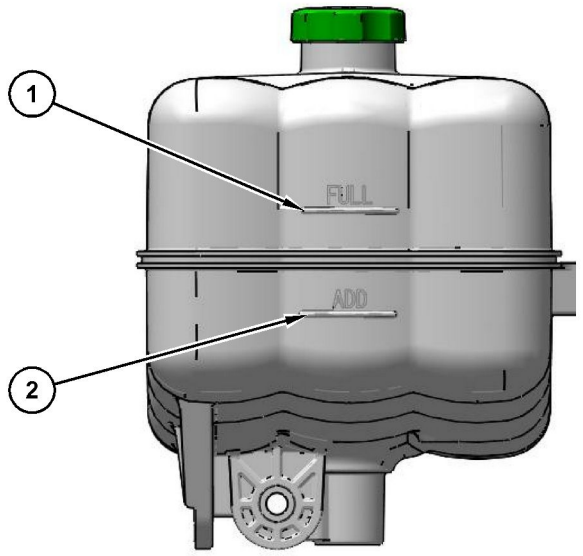

Illustration 667 g06266322

(1) “FULL”
(2) “LOW”

13. Check the coolant reservoir. Maintain the coolant level between “FULL” mark (1) and “LOW” mark (2).

14. If more coolant is necessary, remove the pressure cap and add the appropriate coolant solution.

15. Install the pressure cap.

16. Close the engine hood and latch the engine hood. Close the left access door.

17. Close and latch engine service door.

i07313797

Cooling System Coolant Extender (ELC) - Add

SMCS Code: 1352; 1353; 1395

WARNING

Engine hood and engine hood parts can be hot while engine is running or immediately after engine shutdown. Hot parts or hot components can cause burns or personal injury. Do not allow these parts to contact your skin, when engine is running or immediately after engine shutdown. Use protective clothing or protective equipment to protect your skin.

WARNING

Personal injury can result from hot coolant, steam and alkali.

At operating temperature, engine coolant is hot and under pressure. The radiator and all lines to heaters or the engine contain hot coolant or steam. Any contact can cause severe burns.

Remove cooling system pressure cap slowly to relieve pressure only when engine is stopped and cooling system pressure cap is cool enough to touch with your bare hand.

Do not attempt to tighten hose connections when the coolant is hot, the hose can come off causing burns.

Cooling System Coolant Additive contains alkali. Avoid contact with skin and eyes.

Use Caterpillar Extended Life Coolant (ELC) when you add coolant to the cooling system. See Special Publication, SEBU6250, “Caterpillar Machine Fluids Recommendations” for all cooling system requirements.

Use a Coolant Conditioner Test Kit to check the concentration of the coolant.

NOTICE

Mixing ELC with other products will reduce the effectiveness of the coolant.

This could result in damage to cooling system components.

If Caterpillar products are not available and commercial products must be used, make sure they have passed the Caterpillar EC-1 specification for premixed or concentrate coolants and Caterpillar Extender.

Note: This machine was filled at the factory with Caterpillar Extended Life Coolant.

1. Park the machine on level ground.

2. Stop the engine.

3. Unlatch and raise the engine service door.

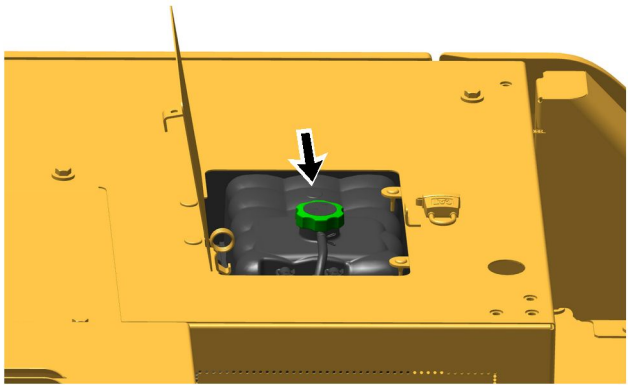

Illustration 668 g06279740

4. Make sure that the cooling system has cooled down. Loosen the cooling system pressure cap slowly to relieve system pressure. Remove the pressure cap.

Note: Refer to Operation and Maintenance Manual, “General Hazard Information” for information on containing fluid spillage.

5. It may be necessary to drain some coolant from the radiator so that Caterpillar Extender can be added to the cooling system.

Note: Always discard drained fluids according to local regulations.

6. Add Caterpillar Extended Life Coolant (ELC) to the cooling system. Refer to the following topics for the proper amount of Caterpillar Extender:

- Special Publication, SEBU6250, “Caterpillar Machine Fluids Recommendations”
- Operation and Maintenance Manual, “Capacities (Refill)”

7. Inspect the o-ring of the cooling system pressure cap. If the o-ring is damaged, replace the pressure cap.

8. Install the cooling system pressure cap.

9. Close and latch engine service door.

i07313844

Cooling System Coolant Level - Check

SMCS Code: 1350-040; 1350-535-FLV; 1395-535-FLV

WARNING

Engine hood and engine hood parts can be hot while engine is running or immediately after engine shutdown. Hot parts or hot components can cause burns or personal injury. Do not allow these parts to contact your skin, when engine is running or immediately after engine shutdown. Use protective clothing or protective equipment to protect your skin.

WARNING

Personal injury can result from hot coolant, steam and alkali.

At operating temperature, engine coolant is hot and under pressure. The radiator and all lines to heaters or the engine contain hot coolant or steam. Any contact can cause severe burns.

Remove cooling system pressure cap slowly to relieve pressure only when engine is stopped and cooling system pressure cap is cool enough to touch with your bare hand.

Do not attempt to tighten hose connections when the coolant is hot, the hose can come off causing burns.

Cooling System Coolant Additive contains alkali. Avoid contact with skin and eyes.

Note: Your machine may be equipped with an automated function for checking fluid levels. Refer to Operation and Maintenance Manual, “Monitoring System” regarding the automated system.

Illustration 669 g06266315

1. Open the radiator door on left side of machine.

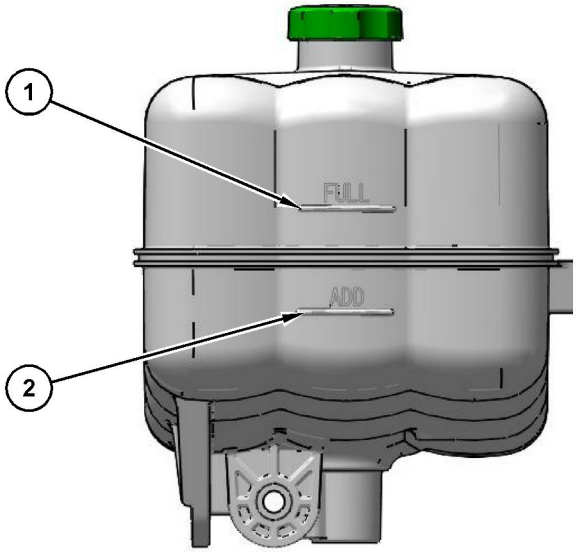

Illustration 670 g06266322

(1) “FULL” level
(2) “ADD” level

2. Check the coolant level of the coolant reservoir when the engine is cold. Maintain the coolant level between the “FULL” mark and the “ADD” mark. If the coolant reservoir is at or below the “ADD” mark, follow Steps 2a through 2g.

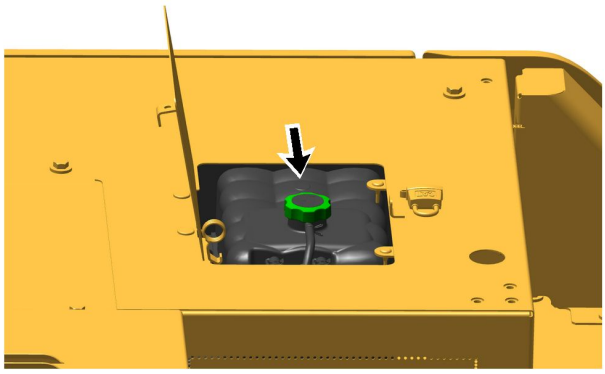

Illustration 671 g06279740

a. Slowly loosen the cooling system pressure cap to relieve system pressure. Remove the pressure cap.

Note: Refer to Operation and Maintenance Manual, “General Hazard Information” for information on containing fluid spillage.

b. Add the appropriate coolant solution to the cooling system. Refer to the following topics:

- Special Publication, SEBU6250, “Caterpillar Machine Fluids Recommendations”
- Operation and Maintenance Manual, “Capacities (Refill)”

c. Start the engine. Operate the engine without the cooling system pressure cap until the water temperature regulator opens and the coolant level stabilizes.

d. Inspect the condition of the o-ring on the pressure cap. If the o-ring is damaged, replace the pressure cap.

e. Install the cooling system pressure cap.

f. Stop the engine.

g. Close the engine hood and latch the engine hood.

i08066725

Cooling System Coolant Sample - Obtain

SMCS Code: 1395-008; 1395-554

The cooling system coolant should be sampled and monitored with regular frequency. The samples should be analyzed per the following guidelines:

- **Level 1 analysis: Every 500 hours**
- **Level 2 analysis: Yearly**

Note: Obtain a Coolant Sample (Level 1) every 250 hours if the cooling system is filled with anything other than Cat ELC or Commercial EC-1 coolants. This includes the following type of coolants.

- Cat Diesel Engine Antifreeze/Coolant (DEAC)
- Commercial heavy-duty coolant/antifreeze

Note: A level 1 analysis may indicate the need for a Level 2 analysis.

Note: A Level 2 analysis is required after 500 hours of operation for the following reasons:

- The cooling system is new
- The cooling system has been refilled
- The cooling system has been converted to a new coolant

NOTICE
Always use a designated pump for oil sampling, and use a separate designated pump for coolant sampling. Using the same pump for both types of samples may contaminate the samples that are being drawn. This contaminate may cause a false analysis and an incorrect interpretation that could lead to concerns by both dealers and customers.

NOTICE
Care must be taken to ensure that fluids are contained during performance of inspection, maintenance, testing, adjusting, and repair of the product. Be prepared to collect the fluid with suitable containers before opening any compartment or disassembling any component containing fluids.

Refer to Special Publication, PERJ1017, “Dealer Service Tool Catalog” for tools and supplies suitable to collect and contain fluids on Cat ® products.

Dispose of all fluids according to local regulations and mandates.

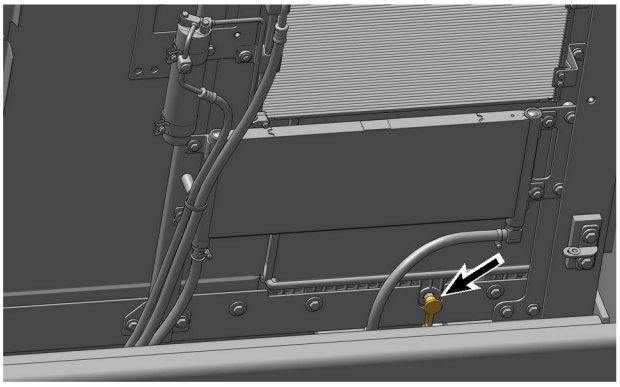

Illustration 672 g06479425

The coolant sample port is on the radiator.

Obtain the sample of the coolant as close as possible to the recommended sampling interval. To receive the full effect of S·O·S analysis, establish a consistent trend of data. To establish a pertinent history of data, perform consistent samplings that are evenly spaced. Supplies for collecting samples can be obtained from your Caterpillar dealer.

Use the following guidelines for proper sampling of the coolant:

- Complete the information on the label for the sampling bottle before you begin to take the samples.
- Keep the unused sampling bottles stored in plastic bags.
- Obtain coolant samples directly from the coolant sample port. You should not obtain the samples from any other location.
- Obtain the coolant sample while the engine is running.
- Obtain the coolant sample while the coolant is at operating temperature.
- Keep the lids on empty sampling bottles until you are ready to collect the sample.
- Place the sample in the mailing tube immediately after obtaining the sample to avoid contamination.
- Never collect samples from expansion bottles.
- Never collect samples from the drain for a system.

Submit the sample for Level 1 analysis.

For additional information about coolant analysis, see Special Publication, SEBU6250, “Caterpillar Machine Fluids Recommendations” or consult your Cat dealer.

i07418828

DEF Filler Screen - Clean
(Emission Related Component)

SMCS Code: 108K-070-Z3

NOTICE
Ensure that the engine is stopped before any servicing or repair is performed.

NOTICE
Care must be taken to ensure that fluids are contained during performance of inspection, maintenance, testing, adjusting, and repair of the product. Be prepared to collect the fluid with suitable containers before opening any compartment or disassembling any component containing fluids.

Refer to Special Publication, NENG2500, “Cat Dealer Service Tool Catalog” or refer to Special Publication, PECJ0003, “Cat Shop Supplies and Tools Catalog” for tools and supplies suitable to collect and contain fluids on Cat products.

Dispose of all fluids according to local regulations and mandates.

The filler neck adapter filter screen in the diesel exhaust fluid tank will need to be cleaned or replaced if contaminated.

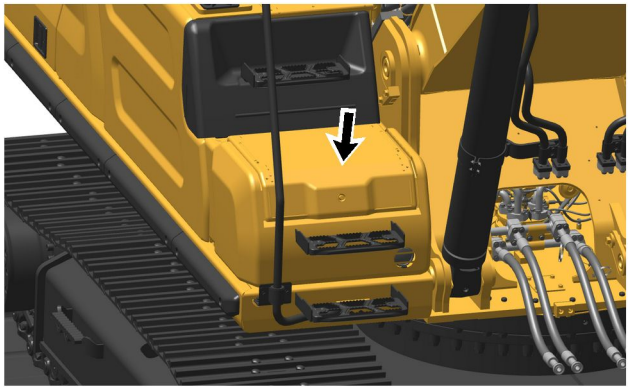

Illustration 673 g06279648

1. Open the Diesel Exhaust Fluid (DEF) compartment.

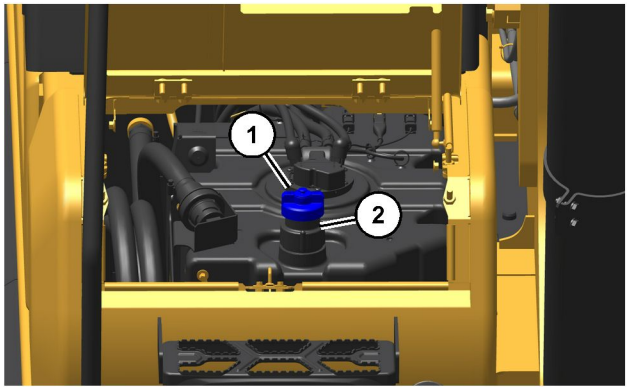

Illustration 674 g06282124

2. Remove fill cap (1).
3. Use a screwdriver or pick to press the tabs on the strainer. Pull the strainer upward from both sides of fill neck adapter (2).

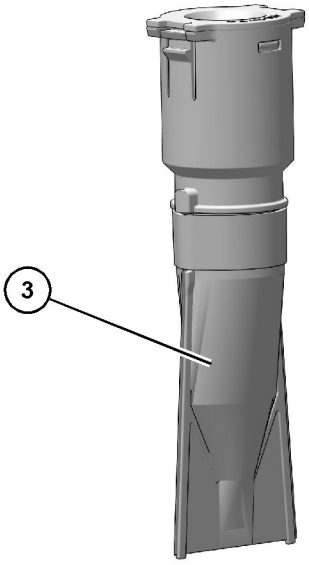

Illustration 675 g06183125

4. Use water or compressed air to clean out the filter screen (3). If there is any debris inside, dry and remove the debris by turning the screen upside down and dumping debris out. If the debris cannot be removed or if the filter screen is damaged, replace the filter screen.

i07443771

DEF Manifold Filters - Replace
(Emission Related Component)

SMCS Code: 108K-510-FI

NOTICE
Ensure that the engine is stopped before any servicing or repair is performed.

NOTICE
Care must be taken to ensure that fluids are contained during performance of inspection, maintenance, testing, adjusting, and repair of the product. Be prepared to collect the fluid with suitable containers before opening any compartment or disassembling any component containing fluids.

Refer to Special Publication, NENG2500, “Cat Dealer Service Tool Catalog” or refer to Special Publication, PECJ0003, “Cat Shop Supplies and Tools Catalog” for tools and supplies suitable to collect and contain fluids on Cat products.

Dispose of all fluids according to local regulations and mandates.

Note: Refer to Special Instruction, REHS8231, “Removal Procedures for Diesel Exhaust Fluid (DEF) Connectors” for the correct removal procedure of hose assemblies (1) and (5).

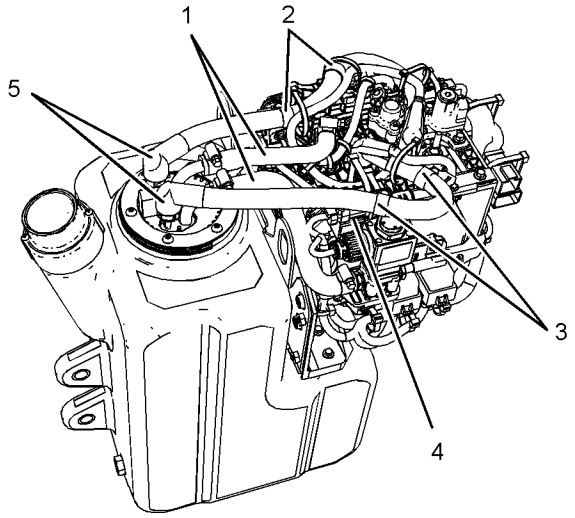

Illustration 676 g03662693
Typical Example

1. Clamp off hoses (1).

2. Remove clips (2) and (3). Disconnect harness assemblies (4). Remove hose assemblies (1) and (5).

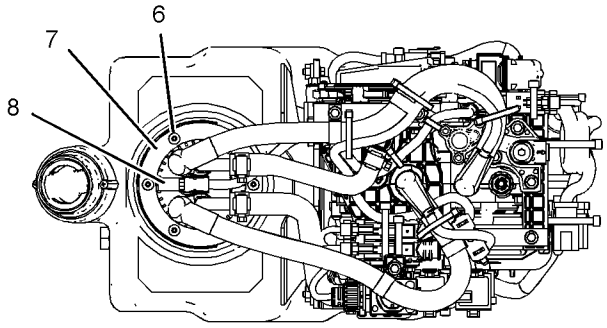

Illustration 677 g03665701
Typical Example

3. Remove bolts (6), plate (7), tank manifold (8), and gasket (not shown).

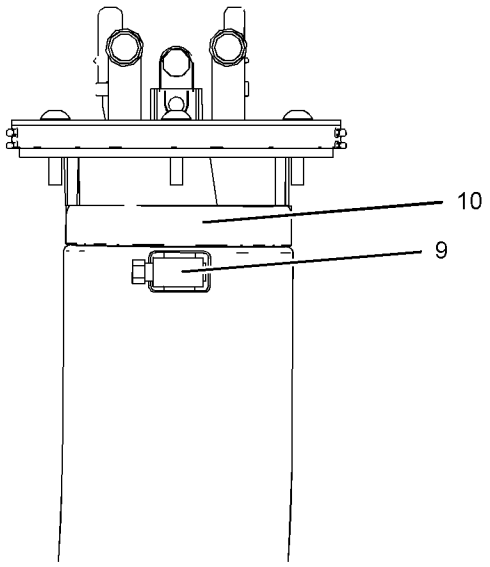

Illustration 678 g03665737

4. Unscrew the band clamp (9) and remove the band clamp from the filter base (10).

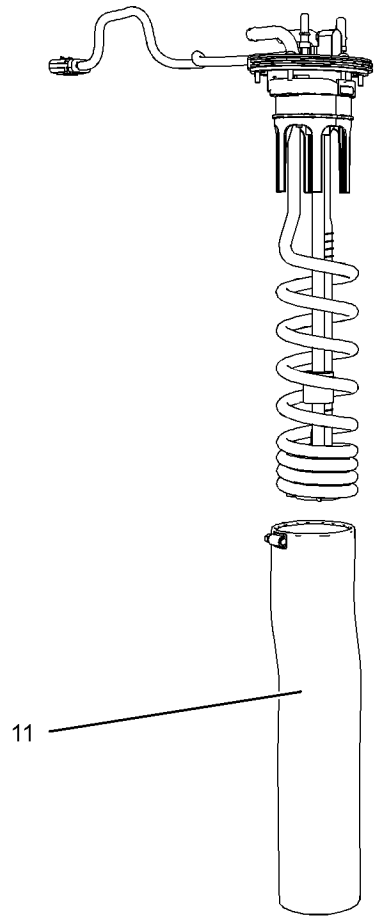

Illustration 679 g03664911

5. Remove the filter (11) from the filter base.

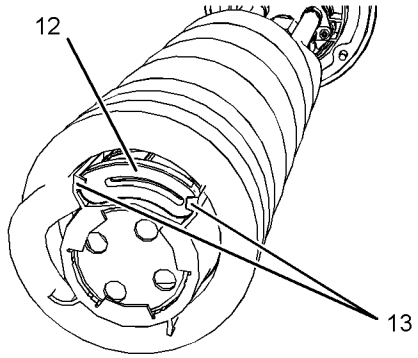

Illustration 680 g03666075

6. Remove the suction filter (12) at the bottom of the header coils by pulling tabs (13). Replace with a new suction filter.

7. Install new filter by pulling filter over the manifold coils up to the bottom of the assembled filter base.

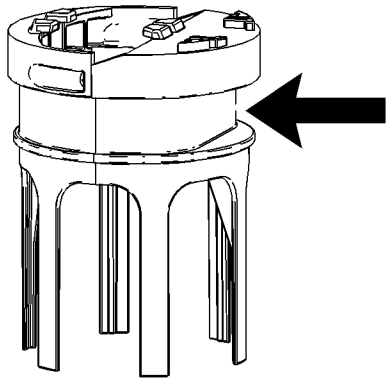

Illustration 681 g03665754

8. Tighten the band clamp 4.5 ± 0.7 N·m (40 ± 6 lb in), ensuring that the band clamp is aligned, as shown in illustration 681 , to the flat spot on the base. Ensure that the filter does not bunch when tightening the band clamp.

9. Install the tank manifold following steps 3 through 5 in reverse order with a new gasket.

10. Tighten bolts (6) in an alternating sequence to 5 ± 1 N·m (44 ± 9 lb in). Tighten bolts (6) a second time in an alternating sequence to 5 ± 1 N·m (44 ± 9 lb in). Apply rubber lubricant to the o-ring seal inside of hose assemblies (1).

i07418836

Diesel Exhaust Fluid - Drain
(Emission Related Component)

SMCS Code: 108K-543

NOTICE
Care must be taken to ensure that fluids are contained during performance of inspection, maintenance, testing, adjusting, and repair of the machine. Be prepared to collect the fluid with suitable containers before opening any compartment or disassembling any component containing fluids.

Dispose of all fluids according to local regulations and mandates.

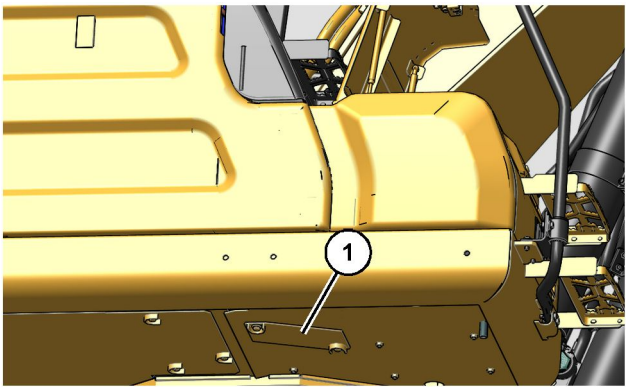

Illustration 682 g06216760

1. Remove access cover (1) to reveal drain plug.
2. Remove drain plug and drain the diesel exhaust fluid into a suitable container.
3. Install and tighten the plug.
4. Reinstall access cover (1).

i07418840

Diesel Exhaust Fluid - Fill
(Emission Related Component)

SMCS Code: 108K-544

NOTICE
Care must be taken to ensure that fluids are contained during performance of inspection, maintenance, testing, adjusting, and repair of the machine. Be prepared to collect the fluid with suitable containers before opening any compartment or disassembling any component containing fluids.

Dispose of all fluids according to local regulations and mandates.

Reference: See Operation and Maintenance Manual, “Capacities (Refill)” for the capacity of the DEF tank for your machine.

The Diesel Exhaust fluid (DEF) fill is on the right side of machine.

Illustration 683 g06280503
DEF Tank Filler Cap

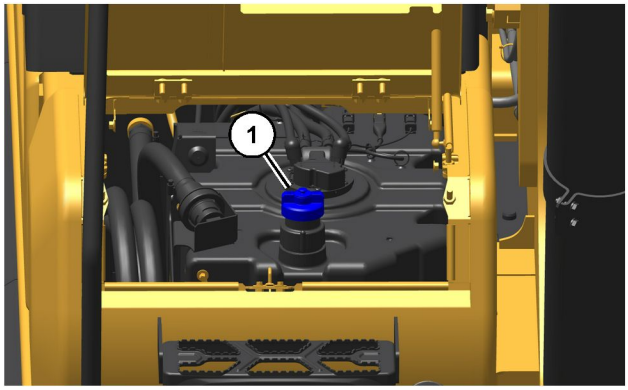

Illustration 684 g06280498

1. Clean blue DEF tank filler cap (1) and the surrounding area.
2. Remove the blue DEF tank filler cap.
3. Fill the tank with diesel exhaust fluid (DEF). DEF level gauge is located on the front side of DEF tank.

Note: Do not fill the DEF tank from a contaminated container or funnel.

Note: Do not over fill the tank. DEF can freeze and needs room for expansion.

4. Install the blue DEF tank filler cap.

Refer to Operation and Maintenance Manual, “Lubricant Viscosities” for more information on diesel exhaust fluid (DEF) guidelines.

i07418847

Diesel Exhaust Fluid Filter - Replace

(Emission Related Component)

SMCS Code: 108K-510-FI

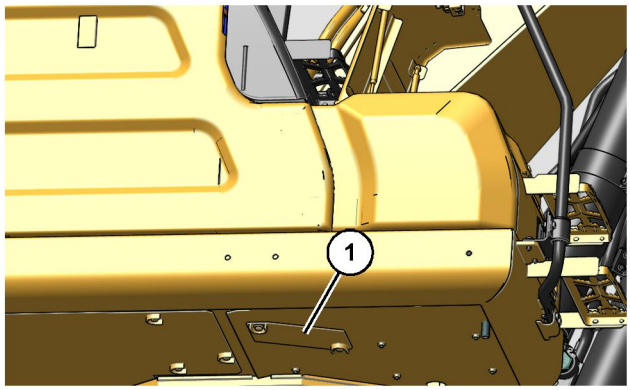

Illustration 685 g06216760

The Diesel Exhaust Fluid (DEF) filter can be accessed after removing the access guard (1) on the bottom of the tool box on the right side of the machine.

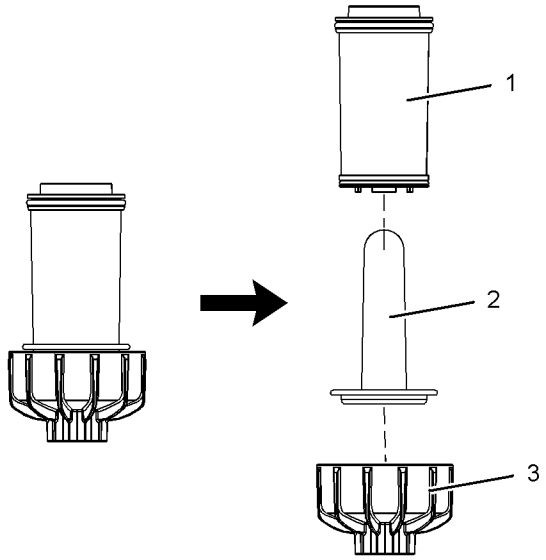

Illustration 686 g03332612

Typical Example

WARNING

Personal injury can result from improper handling of chemicals.

Make sure you use all the necessary protective equipment required to do the job.

Make sure that you read and understand all directions and hazards described on the labels and material safety data sheet of any chemical that is used.

Observe all safety precautions recommended by the chemical manufacturer for handling, storage, and disposal of chemicals.

NOTICE

Ensure that the engine is stopped before any servicing or repair is performed.

NOTICE

Care must be taken to ensure that fluids are contained during performance of inspection, maintenance, testing, adjusting, and repair of the product. Be prepared to collect the fluid with suitable containers before opening any compartment or disassembling any component containing fluids.

Refer to Special Publication, NENG2500, “Cat Dealer Service Tool Catalog” or refer to Special Publication, PECJ0003, “Cat Shop Supplies and Tools Catalog” for tools and supplies suitable to collect and contain fluids on Cat products.

Dispose of all fluids according to local regulations and mandates.

1. Remove the diesel exhaust fluid (DEF) filter cap (3) with a 27 mm (1.06 inch) wrench.
2. Remove the rubber cone insert (2) from the DEF filter (1).

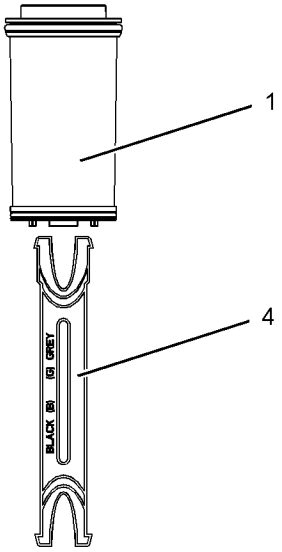

Illustration 687 g03332637
Typical Example

3. Insert the DEF filter removal tool (4) into the DEF filter (1) and remove the DEF filter (1).

Note: Avoid twisting the diesel exhaust fluid filter upon removal. Twisting may cause a tear.

4. Clean the area around the filter housing.
5. Lubricate seals of new DEF filter (1) with diesel exhaust fluid or distilled water.
6. Install new DEF filter (1) and rubber cone insert. Torque the filter to 20 ± 5 N·m (14.8 ± 3.7 lb ft) with a 27 mm (1.06 inch) wrench.

Note: Avoid twisting the diesel exhaust fluid filter upon installation. Twisting may cause a tear.

i07418850

Diesel Exhaust Fluid Injector - Replace

(Emission Related Component)

SMCS Code: 108I-510

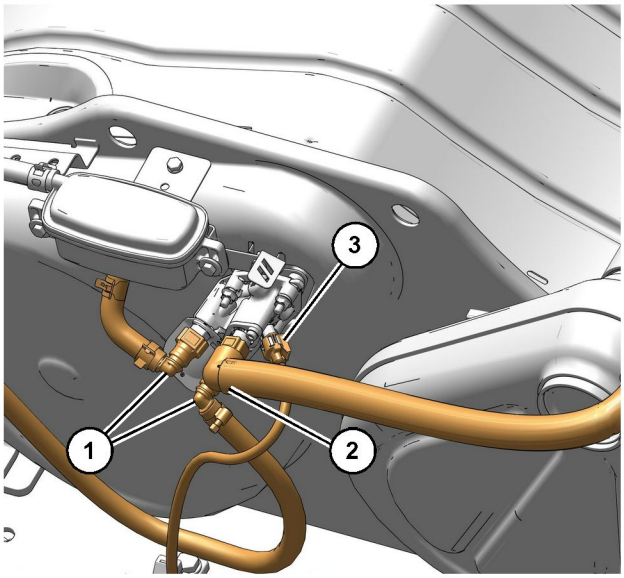

Illustration 688 g06226112
Typical example

(1) Coolant lines
(2) DEF line
(3) Electrical connector

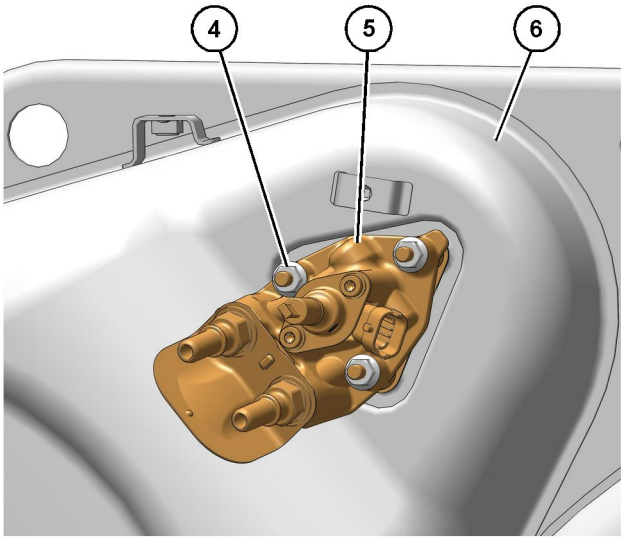

Illustration 689 g06226151

Typical example

(4) Nuts
(5) DEF injector
(6) Clean Emission Module

1. Drain the coolant to remove coolant lines (1). Remove cooling lines (1) and remove Diesel Exhaust Fluid (DEF) line (2).

2. Remove electrical connector (3) from DEF injector (5) and install protection caps to DEF injector (5). Remove nuts (4) and washers (9) from DEF injector (5) and remove DEF injector from Clean Emission Module (CEM) (6).

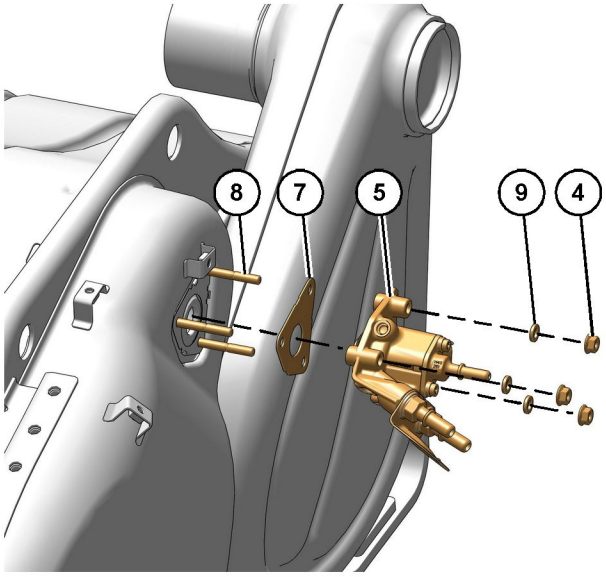

Illustration 690 g06226155

Typical example

(4) Nuts
(5) DEF injector
(7) Gasket
(8) Studs
(9) Washers

3. Remove gasket (7) and remove studs (8). Discard the gasket and the studs.

4. Ensure that the sealing face of the CEM is clean and free from dirt.

5. Apply bostik pure nickel ant-seize compound to ends of the new studs (8). Install the coated ends of the new studs into the CEM, and tighten to a torque of 5 N·m (44 lb in).

6. Install new gasket (7), ensure that the metal side of the gasket is to the CEM. Install new DEF injector (5) to CEM (6).

7. Install washers (9) and apply bostik pure nickel ant-seize compound to the threads of studs (8).

8. Install nuts (4) and tighten the nuts to a torque of 5 N·m (44 lb in). Retighten the nuts to 5 N·m (44 lb in). Then, turn the nuts an additional 90 degrees.

9. Install electrical connector (3), DEF line (2), and coolant lines (1).

10. Fill cooling system to the correct level. Ensure that the correct specification of coolant is used.

If available, using the electronic service tool (ET) perform DEF Dosing System Verification test.

i07400083

Diesel Particulate Filter - Clean (Emission Related Component)

SMCS Code: 108F-070; 1091-070

Consult your Cat dealer when the DPF needs to be cleaned.

The approved Caterpillar DPF maintenance procedure requires that one of the following actions be taken when the DPF needs to be cleaned:

- The DPF from your machine can be replaced with a new DPF
- The DPF from your machine can be replaced with a remanufactured DPF
- The DPF from your machine can be cleaned by your local authorized Cat dealer, or a Caterpillar approved DPF cleaning machine, and reinstalled

Note: To maintain emissions documentation, the DPF that is removed from the machine when the DPF is cleaned must be reinstalled on the same machine.

Note: A specific ash service regeneration must be performed before removing a DPF that will be cleaned. All three scenarios listed above require a reset of the ash monitoring system in the engine ECM.

i07348841

Engine Air Filter Primary and/or Secondary Element - Replace

SMCS Code: 1054-510-PY; 1054-510-SE

Primary Air Filter Element - Replace

NOTICE
Service the air cleaner only with the engine stopped. Engine damage could result.

NOTICE
Service the engine air filter elements only when a message or a warning is displayed on the monitor display. Do not open the filter compartment unless service is indicated. Opening the filter compartment when not necessary to do so increases the chance of dirt contamination in engine air intake system components.

NOTICE
Short air filter life can result if the pre-cleaner system malfunctions. If air filter life is drastically reduced from typical for the operating conditions, consult your Cat dealer.

NOTICE
Do not use the air filter elements longer than 1 year.

The engine air cleaner assembly is located behind the front access door on the left side of the machine.

1. Park the machine on a level surface. Stop the engine.

Illustration 691 g06181546

2. Open the front access door on the left side of the machine.

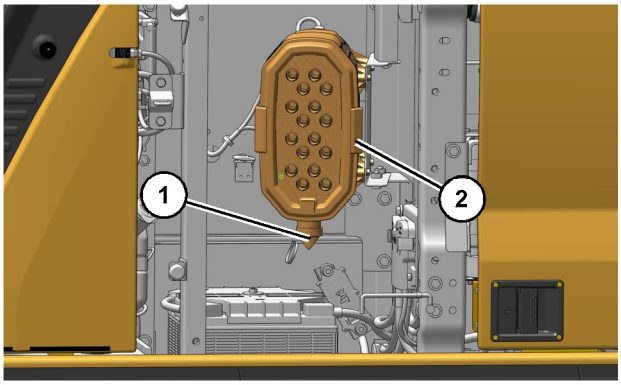

Illustration 692 g06183302

3. Squeeze outlet tube (1) to purge the dirt from the outlet tube.

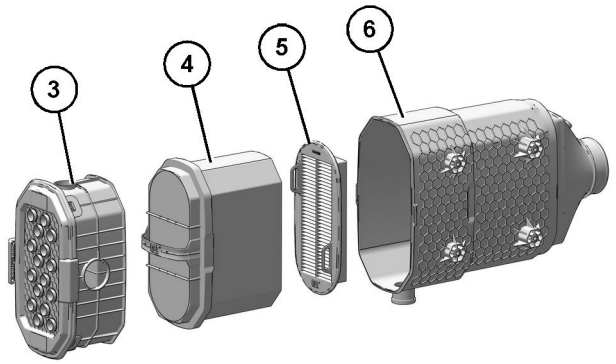

Illustration 693 g06222467

4. Release latches (2) that secure pre-cleaner (3) to engine air filter housing (6).

5. Remove pre-cleaner (3).

6. Clean inside the air filter housing where the pre-cleaner was removed.

NOTICE
Caterpillar does not recommend cleaning the primary air filter element. Caterpillar only recommends to replace the primary air filter element. Caterpillar does not cover costs for damage to engine components caused by cleaning the primary air filter element.

Observe the following guidelines if you attempt to clean the primary filter element:

Do not tap or strike the filter element in order to remove dust.

Do not wash the filter element.

Use low pressure compressed air in order to remove the dust from the filter element. Air pressure must not exceed 500 kPa (73 psi). Direct the air flow up the pleats and down the pleats from the inside of the filter element. Take extreme care in order to avoid damage to the pleats.

Do not clean the air filter element more than three times. The air filter element must be replaced if the filter has been in use for one year, regardless of the number of times the filter has been cleaned.

Do not use air filters with damaged pleats, gaskets, or seals. Dirt entering the engine will cause damage to engine components.

NOTICE
Do not clean the air filter elements by bumping or tapping. This could damage the seals. Do not use elements with damaged pleats, gaskets, or seals. Damaged elements will allow dirt to pass through. Engine damage could result.

7. Remove primary air filter element (4). Replace the filter element as necessary.

Note: Replace the primary filter if the filter has been in use for 1 year.

8. Clean inside the air filter assembly housing.

Note: Do not allow any dirt or debris to contact the secondary air filter element (5).

9. Inspect the seal area ensure that no foreign debris has fallen into the seal area. Clean the air cleaner interior to remove remaining dust or debris

10. Without removing secondary air filter element (5), inspect the filter element for damage. Replace if necessary or dirty. Refer to Secondary Air Filter Element - Replace.

11. Install the secondary air filter element.

12. Install the primary filter.

Note: Filters must be fully installed before the pre-cleaner can be attached. If the pre-cleaner cannot be fully latched, verify that the filter elements are properly seated.

13. Install the pre-cleaner and secure the latches that hold the pre-cleaner to the air filter housing.

14. Close the access door.

Secondary Air Filter Element - Replace

NOTICE
Always replace the secondary element. Do not attempt to reuse it by cleaning. Engine damage could result.

NOTICE
Do not use the air filter elements longer than 1 year.

NOTICE
Replace the secondary filter element when you service the primary element for the third time. If a clean primary element has been installed and the filter element indicator is still flashing, replace the secondary filter element. Also if the exhaust smoke remains black and a clean primary filter element has been installed, replace the secondary filter element.

1. Open the front access door on the left side of the machine.

2. Refer to the section “Primary Air Filter Element - Replace”. Remove the pre-cleaner from the engine air filter housing. Remove the primary air filter element from the air filter housing.

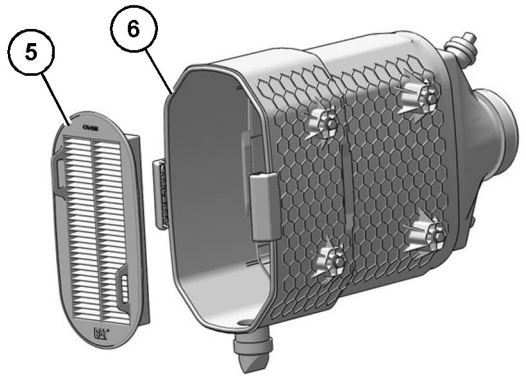

Illustration 694 g06183315

3. Secondary air filter element (5) is pressed into the rear portion of engine air filter housing (6). Pull forward on the secondary air filter element to remove the element from the engine air filter housing.

4. Cover the air inlet opening. Clean inside the air cleaner housing.

5. Clean all surfaces of the pre-cleaner cover and body.

6. Uncover the air inlet opening.

7. Carefully press the secondary air filter element into the rear portion of the engine air filter housing.

Note: Be certain that the new secondary air filter element is properly seated in the filter housing. Also, check to see that no damage to the filter element has occurred during installation.

8. Install the primary air filter element and the pre-cleaner.

9. Close the access door.

Engine Air Pre-Cleaner - Clean

Note: Do not attempt to clean the pre-cleaner by hitting the filter against another object. Damage to the filter is likely to occur.

Illustration 695 g06183310

After removing the pre-cleaner from the air filter housing, inspect the interior of the pre-cleaner through the ejection ports around the perimeter.

In general, dust and debris will clear automatically through normal pre-cleaner operation and no further service will be required.

If the ejection ports are blocked, or dust is packed between the pre-cleaner tubes, first try to clear any accumulation by vigorously shaking the pre-cleaner.

If the pre-cleaner is still blocked with dirt, the pre-cleaner may be separated by releasing the snap features holding the front cover to the pre-cleaner body.

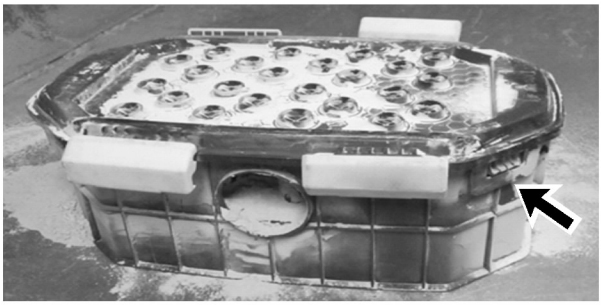

Illustration 696 g06069263

1. Place the pre-cleaner assembly on a suitable work surface. The interior of the pre-cleaner may have accumulated debris. Protect your work surface to collect excess debris and to avoid scattering debris.

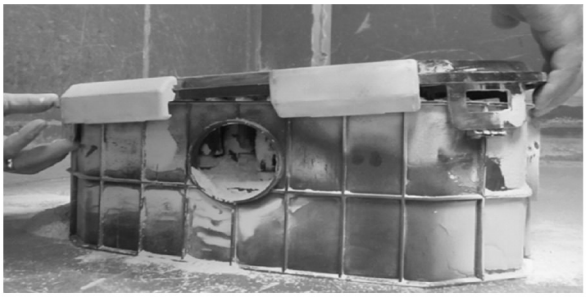

Illustration 697 g06069266

2. Lift the locking tabs on one end of the cover away from the retainers. Move the locking tabs only far enough to clear the retention posts.

Note: Do not bend the locking tabs farther than necessary to release the tabs. Damage to the air cleaner can result. Do not use tools to force the snap features off the retainers.

3. Pull one end of the top cover away from the bottom half.

4. Hold one end of the cover sections apart and separate one of the locking tabs on the other end of the pre-cleaner.

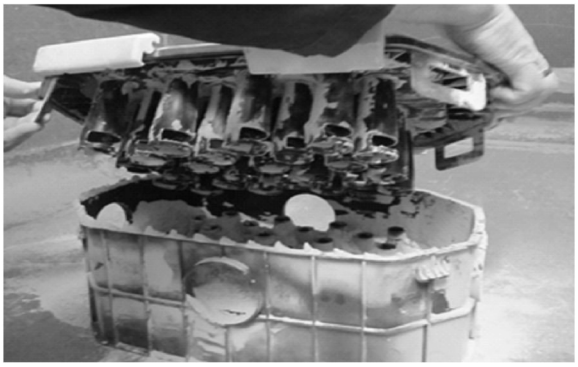

Illustration 698 g06069264

5. Pull the top cover up and away from the bottom.

6. Clear any blockage by shaking the pre-cleaner components and/or brushing away accumulated debris.

Note: Do not use picks or other stiff implements to clear debris, you may damage the pre-cleaner components

Note: Do not attempt to remove the pre-cleaner tubes from the top cover or you will damage the air cleaner.

7. If the blockage is still not cleared, you may attempt to clear the debris by use of an air nozzle limited to 500 kPa (73 psi).

Alternately, each part of the pre-cleaner may be submerged in water to loosen mud or other debris that may have dried on the interior surface of the air cleaner.

Note: Never attempt to use a pressure washer or other high-pressure water sources to clean the pre-cleaner. Use of high-pressure water may damage the pre-cleaner tubes and reduce the pre-cleaner effectiveness.

8. After cleaning, reassemble the pre-cleaner by lining up the tubes on the pre-cleaner top with the tubes in the pre-cleaner bottom.

9. Allow the pre-cleaner top to rest on the pre-cleaner bottom and ensure that the four snap features are aligned.

Illustration 699 g06069247

10. If all the tabs are aligned, gently push the pre-cleaner top down into place. Ensure that all the snap features have engaged.

11. Before installing the pre-cleaner to the air filter housing, inspect the pre-cleaner gasket for damage. Replace if damaged.

i07245363

Engine Oil Level - Check

SMCS Code: 1000-535

WARNING

Hot oil and hot components can cause personal injury. Do not allow hot oil or hot components to contact skin.

NOTICE
Do not overfill the crankcase. Engine damage can result.

Note: In addition to an engine oil dipstick, your machine may be equipped with an automated function for checking fluid levels. Refer to Operation and Maintenance Manual, “Monitoring System” regarding the automated system.

Note: If the machine is on an incline or the engine has been stopped only for a short time, then the engine oil does not return to the crankcase and the fluid level cannot be properly checked by either method. Park the machine on level ground and check that the oil level after the engine has been stopped for at least 30 minutes.

Check the oil level while the engine is stopped. Do not check the oil level while the engine is running.

1. Open the engine hood.

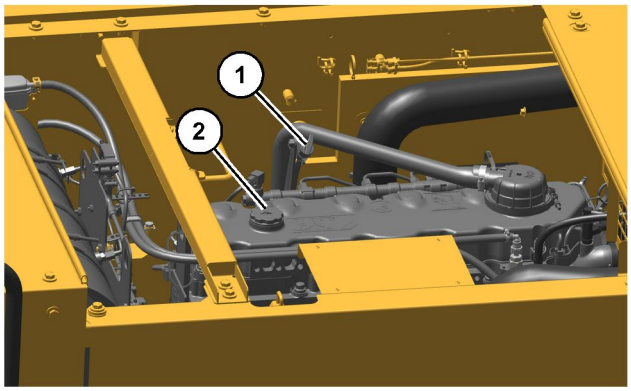

Illustration 700 g06264436

2. Remove dipstick (1). Wipe the oil off the dipstick and reinsert the dipstick.

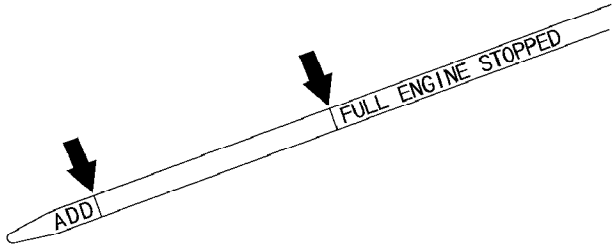

Illustration 701 g00832222

3. Remove the dipstick and check the dipstick. The oil level should be between the “FULL” mark and the “ADD” mark.

NOTICE
Do not fill above the “FULL” mark on the dipstick.

If the oil level is above the “FULL” Mark, the crankshaft might dip into the oil during engine operation. This will lead to excessively high oil temperatures. High oil temperatures can reduce the lubricating characteristics of oil.

Note: Refer to Operation and Maintenance Manual, “General Hazard Information” for information on Containing Fluid Spillage.

4. Remove oil filler plug (2) to add oil, if necessary. See Operation and Maintenance Manual, “Lubricant Viscosities”.

Note: If the oil is deteriorated or badly contaminated, change the oil regardless of the maintenance interval.

5. Clean the oil filler plug. Install the oil filler plug.

6. Close the engine hood.

i07105519

Engine Oil Sample - Obtain

SMCS Code: 1000-008; 1000; 1348-554-SM; 1348-008; 7542-008; 7542-554-OC; 7542-554-SM

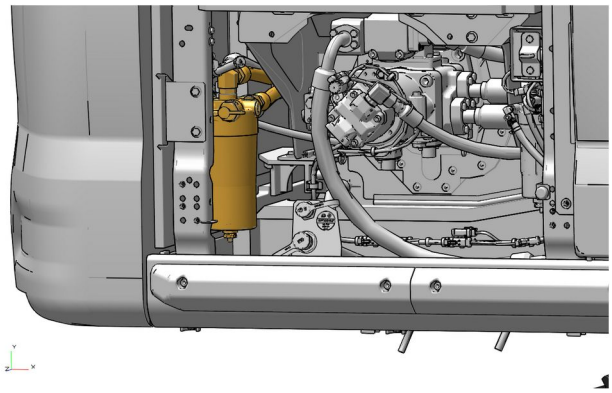

Illustration 702 g06226123

Obtain a sample of the engine oil from the engine oil sampling valve that is on the engine oil filter housing. Refer to Special Publication, SEBU6250, “S·O·S Oil Analysis” for information that pertains to obtaining a sample of the engine oil. Refer to Special Publication, PEGJ0047, “How To Take A Good Oil Sample” for more information about obtaining a sample of the engine oil.

i08265955

Engine Oil and Filter - Change

SMCS Code: 1318-510

NOTICE

The engine oil and filter change interval for standard service application is every 1000 hours when the following requirements are met:

- Utilize Cat Recommended Fluids
- Utilize Cat Filters
- Utilize S·O·S Services at recommended interval

When these requirements are not met, the oil and filter change interval should be every 500 hours, or use S·O·S Services oil sampling and analysis program to determine an acceptable oil change interval.

If you select an interval for oil and filter change that is too long, you may damage the engine.

NOTICE

When operating in any of the conditions or environments outlined in this Operation and Maintenance Manual, Severe Service Application, use S·O·S Services oil analysis to determine the best oil and filter change interval.

When S·O·S Services are not used in severe service applications, the oil and filter change interval should be every 250 hours..

If you select an interval for oil and filter change that is too long, you may damage the engine.

Reference: Operation and Maintenance Manual, “Lubricant Viscosities”

Reference: Operation and Maintenance Manual, “Maintenance Interval Schedule”

Reference: Operation and Maintenance Manual, “Severe Service Application”

Reference: Operation and Maintenance Manual, “S·O·S Information”

Use the table below to determine the appropriate oil and filter change interval.

Table 33

Selection of Oil and Filter Change Interval				
	Conditions			Interval
	Cat ® Recommended Fluids	Cat ® Filters	S·O·S Services	
Standard Service Application	YES	YES	YES	1000 hours
	YES	YES	NO	500 hours
	YES	NO	YES	500 hours
	NO	YES	YES	500 hours
	NO	NO	NO	250 hours
Severe Service Application	NO	NO	NO	250 hours
	YES	YES	NO	250 hours
	YES	YES	YES	Use S·O·S(1)
	YES	NO	YES	Use S·O·S(1)
	NO	YES	YES	Use S·O·S(1)

(1) If operating in any of the conditions or environments outlined in the Severe Service Application, use S·O·S Services oil analysis to determine the best oil change interval.

Note: Initial oil and filter change is required at initial 500 hours.

Procedure for Changing Engine Oil and Filter

WARNING

Hot oil and hot components can cause personal injury. Do not allow hot oil or hot components to contact skin.

Note: If the sulfur content in the fuel is greater than 1.5 percent by weight, use an oil that has a TBN of 30 and reduce the oil change interval by one-half.

Note: Drain the crankcase while the oil is warm. This allows waste particles that are suspended in the oil to drain. As the oil cools, the waste particles will settle to the bottom of the crankcase. The particles will not be removed by draining the oil and the particles will recirculate in the engine lubrication system with the new oil.

1. Prepare the machine for maintenance. Refer to Operation and Maintenance Manual, “Prepare the Machine for Maintenance"

Note: Refer to Operation and Maintenance Manual, “General Hazard Information” for information on Containing Fluid Spillage.

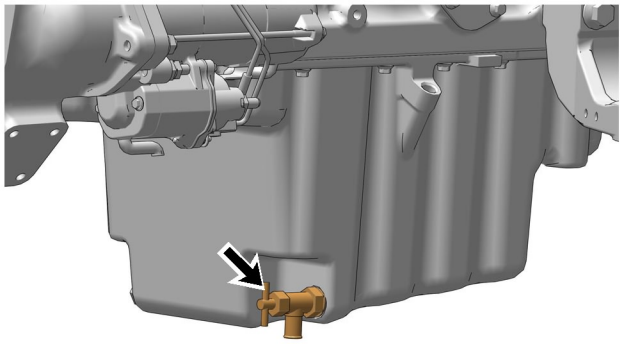

Illustration 703 g06183508
Crankcase drain valve

2. Open the crankcase drain valve . Allow the oil to drain into a suitable container.

Note: Discard any drained fluids according to local regulations.

3. Close the drain valve.

Illustration 704 g06279640

Right side access door

4. Open the access door at the right side of the machine.

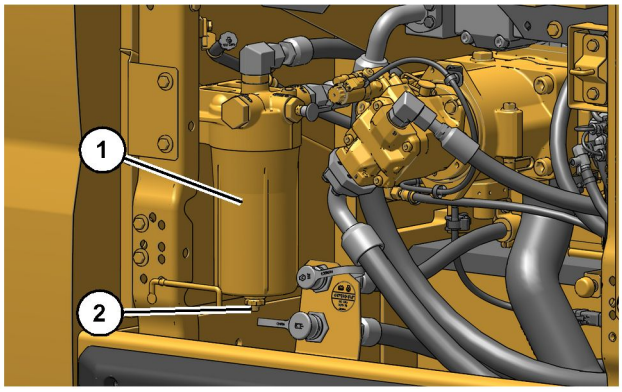

Illustration 705 g06282140

(1) Oil filter housing
(2) Drain valve

5. Loosen drain valve (2) and allow the oil to drain out of the oil filter housing(1). The drain valve(2) is on the bottom of the engine oil filter housing(1).

Note: If equipped with a fast fill system, the oil can be drained and filled using the fast fill coupler. Refer to “Fast Fill” in this chapter.

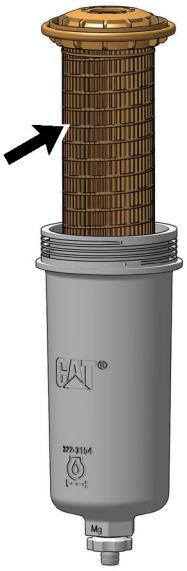

Illustration 706 g06183515

Oil filter

6. Remove the oil filter housing(1). Refer to Operation and Maintenance Manual, “Oil Filter - Inspect”. Dispose the used filter according to local regulations.

7. Remove the filter from the oil filter housing(1).

8. Clean the oil filter housing(1) and base thread.

9. Install the new filter element into the oil filter housing(1).

10. After installing the new element, hand tighten the drain valve(2) at the bottom of the oil filter housing (1).

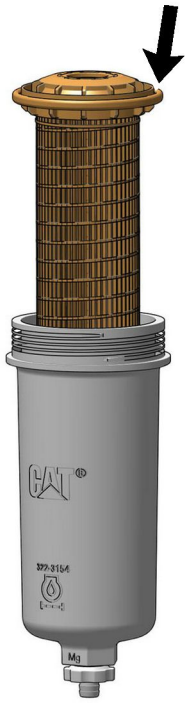

Illustration 707 g06604084

Oil filter gasket.

11. Apply a thin coat of engine oil to the gasket of the oil filter. Refer to Illustration 707 for lubrication points on the oil filter gasket.

12. Install the oil filter housing(1) with element to the filter base utilizing a socket wrench.

Note: Apply a tightening torque of 100 N·m (74 lb ft) and tighten until metal to metal contact is achieved.

13. Close the access door.

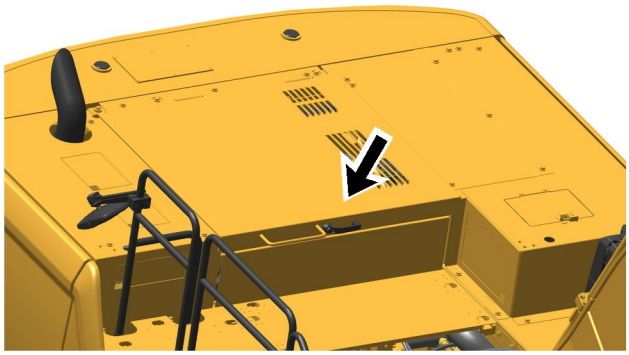

Illustration 708 g06279602

Top access door

14. Open the access door on top of the machine. Refer to “Access Door and Cover Locations“.

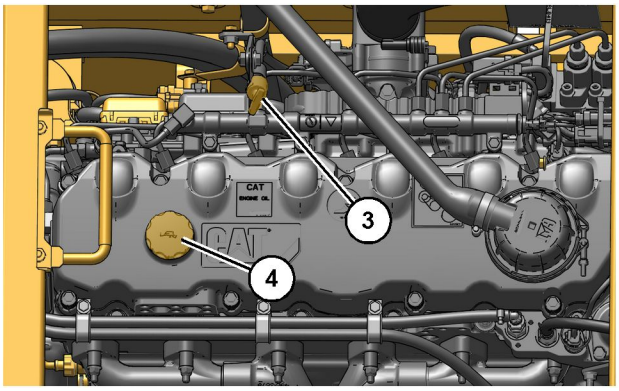

Illustration 709 g06282148

(3) Oil level gauge
(4) Oil filler cap

15. Remove oil filler cap (4). Fill the crankcase with new oil. See Operation and Maintenance Manual, “Capacities (Refill)”. Clean the oil filler plug and install the oil filler plug.

NOTICE
Do not under fill or overfill engine crankcase with oil. Either condition can cause engine damage.

16. Start the engine and allow the oil to warm. Check the engine for leaks. Stop the engine.

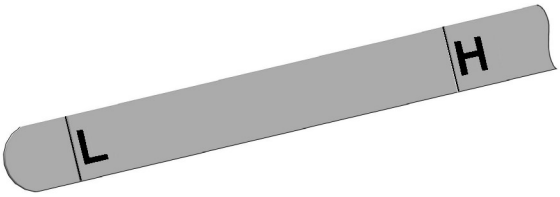

Illustration 710 g06183475

Oil level gauge

17. Wait for 30 minutes to allow the oil to drain back into the crankcase. Check the oil level with oil level gauge(3). Maintain the oil between the “L” and “H” marks on the oil level gauge(3). If necessary, add oil.

18. Close the access door.

Fast Fill

If your machine is equipped with a deluxe service center, you may drain and add the engine oil through the fast fill port.

Illustration 711 g06279640

Right side access door

1. Open the access door on the right side of the machine.

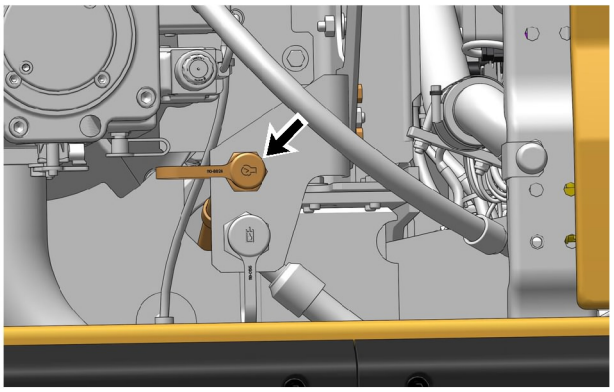

Illustration 712 g06183504

Dust cover

2. Remove the dust cover.

3. Attach a hose that is equipped with a nozzle.

Note: Make sure that the nozzle and the receiver are free from debris before attaching.

4. Drain the oil or add the oil, as needed.

5. Install the dust cover.

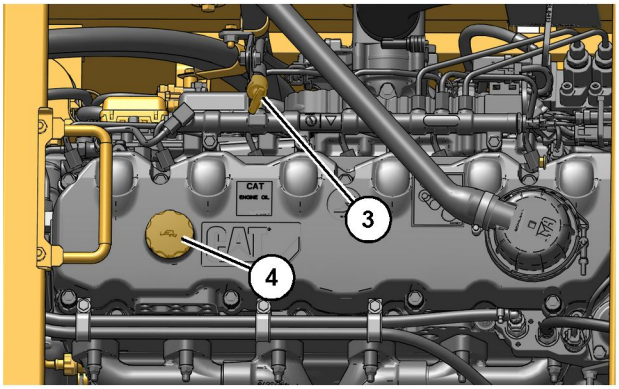

Illustration 713 g06282148

(3) Oil level gauge
(4) Oil filler cap

6. Verify that the correct amount of oil was added and add or remove oil as necessary. An oil level gauge (3) is in the same compartment as the fast fill port.

i07901572

Engine Valve Lash - Check

SMCS Code: 1102; 1102-082; 1102-535; 1105-535; 1105-025; 1121-535; 1209; 1209-535; 1209-082; 7527

Refer to Engine Systems Operation/Testing and Adjusting to perform the complete procedure for the valve lash adjustment.

i07051358

Ether Starting Aid Cylinder - Replace

(If Equipped)

SMCS Code: 1456-510-CD

WARNING

Breathing ether vapors or repeated contact of ether with skin can cause personal injury. Personal injury may occur from failure to adhere to the following procedures.

Use ether only in well ventilated areas.

Do not smoke while changing ether cylinders.

Use ether with care to avoid fires.

Do not store replacement ether cylinders in living areas or in the operator's compartment.

Do not store ether cylinders in direct sunlight or at temperatures above 49 °C (120 °F).

Discard cylinders in a safe place. Do not puncture or burn cylinders.

Keep ether cylinders out of the reach of unauthorized personnel.

The ether cylinder is located inside the rear access door on the left side of the machine.

Refer to Operation and Maintenance, “Fire Prevention and Explosion Prevention” before you replace the ether cylinder.

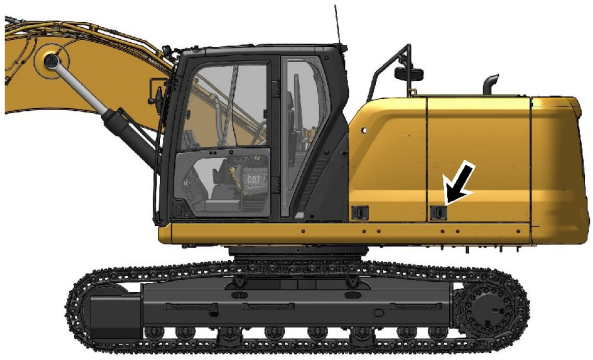

Illustration 714 g06179792

1. Open the rear access door at the left side of the machine.

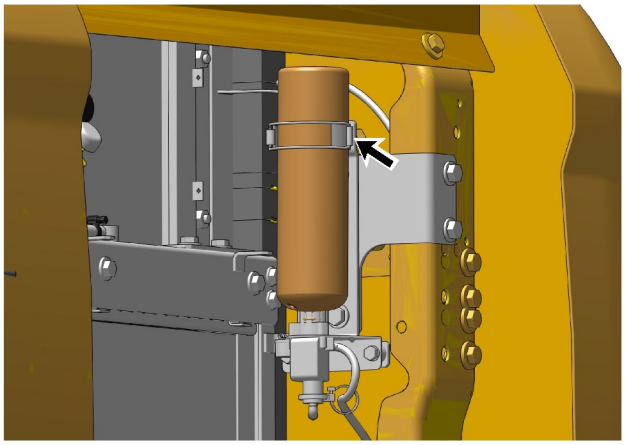

Illustration 715 g06211094

2. Loosen the cylinder retaining clamp.

3. Unscrew the empty ether starting aid cylinder and remove the empty ether starting aid cylinder.

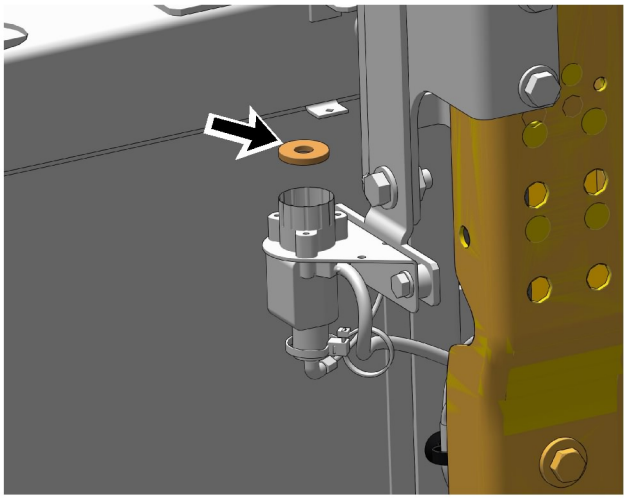

Illustration 716 g06211096

4. Remove the used gasket.

5. Install a new gasket.

Note: A new gasket and O-ring is provided with each new ether starting aid cylinder.

6. Install the new ether starting aid cylinder.

7. Tighten the ether starting aid cylinder hand tight.

8. Tighten the cylinder retaining clamp securely.

9. Close the access door.

i07786001

Film (Product Identification) - Clean

SMCS Code: 7405-070; 7557-070

Illustration 717 g06435629

Cleaning of the Films

Make sure that all the product identification films are legible. Make sure that the recommended procedures are used to clean the product identification films. Ensure that all the product identification films are not damaged or missing. Clean the product identification films or replace the films.

Hand Washing

Use a wet solution with no abrasive material that contains no solvents and no alcohol. Use a wet solution with a “pH” value between 3 and 11. Use a soft brush, a rag, or a sponge to clean the product identification films. Avoid wearing down the surface of the product identification films with unnecessary scrubbing. Ensure that the surface of the product identification films is flushed with clean water and allow the product identification films to air dry.

Power Washing

Power washing or washing with pressure may be used to clean product identification films. However, aggressive washing can damage the product identification films.

Excessive pressure during power washing can damage the product identification films by forcing water underneath the product identification films. Water lessens the adhesion of the product identification film to the product, allowing the product identification film to lift or curl. These problems are magnified by wind. These problems are critical for the perforated film on windows.

To avoid lifting of the edge or other damage to the product identification films, follow these important steps:

- Use a spray nozzle with a wide spray pattern.
- A maximum pressure of 83 bar (1200 psi)
- A maximum water temperature of 50° C (120° F)
- Hold the nozzle perpendicular to the product identification film at a minimum distance of 305 mm (12 inch).
- Do not direct a stream of water at a sharp angle to the edge of the product identification film.

i06969803

Final Drive Oil - Change

SMCS Code: 4050-044-FLV

WARNING

Hot oil and hot components can cause personal injury. Do not allow hot oil or hot components to contact skin.

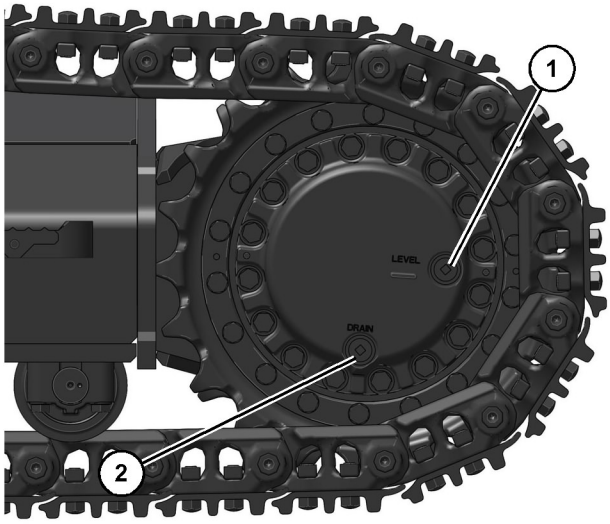

Illustration 718 g06182944

(1) Oil level plug
(2) Oil drain plug

1. Position one final drive so that oil drain plug (2) is at the bottom.

Note: Refer to Operation and Maintenance Manual, “General Hazard Information” for information on Containing Fluid Spillage.

2. Remove drain plug (2) and level plug (1). Allow the oil to drain into a suitable container.
3. Clean the plugs and inspect the O-ring seals. If wear or damage is evident, replace the drain plug, the level plug, and/or the O-ring seals.
4. Install drain plug (2).
5. Fill the final drive to the bottom of the opening on level plug (1). See Operation and Maintenance Manual, “Lubricant Viscosities” and Operation and Maintenance Manual, “Capacities (Refill)”.

Note: If the oil fills slowly, the fill hole may be blocked by the planetary gear. Rotate the final drive to move the planetary gear away from the fill hole.

Note: Overfilling the final drive will cause the seals on the travel motor to allow hydraulic oil or water to enter the final drive. The final drive may become contaminated.

6. Install level plug (1).
7. Perform Step 1 to Step 6 on the other final drive. Use a different container for the oil so that the oil samples from the final drives will be separate.
8. Completely remove the oil that has spilled onto surfaces.
9. Start the machine and allow the final drives to run through several cycles.
10. Stop the machine. Check the oil level.
11. Check the drained oil for metal chips or for particles. If there are any chips or particles, consult your Cat dealer.
12. Properly dispose of the drained material. Obey local regulations for the disposal of the material.

i06969810

Final Drive Oil Level - Check

SMCS Code: 4050-535-FLV

WARNING

Hot oil and hot components can cause personal injury. Do not allow hot oil or hot components to contact skin.

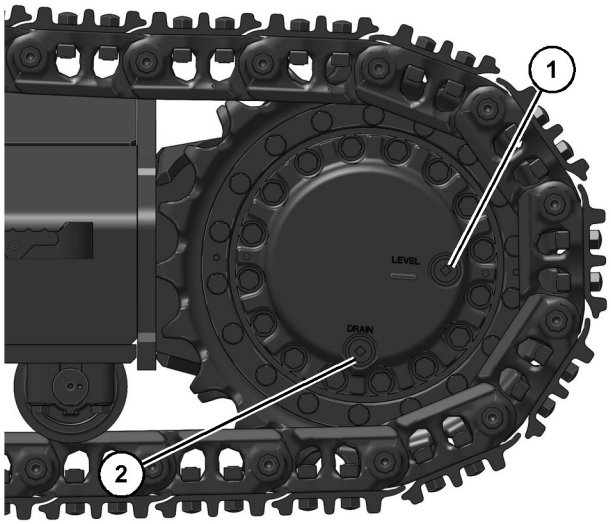

Illustration 719 g06182944

(1) Oil level plug
(2) Oil drain plug

1. Position one final drive so that oil drain plug (2) is at the bottom.

Note: Refer to Operation and Maintenance Manual, “General Hazard Information” for information on Containing Fluid Spillage.

2. Remove oil level plug (1).
3. Check the oil level. The oil should be near the bottom of the level plug opening.
4. Add oil through the level plug opening, if necessary. See Operation and Maintenance, “Lubricant Viscosities”.

Note: If the oil fills slowly, the fill hole may be blocked by the planetary gear. Rotate the final drive to move the planetary gear away from the fill hole.

Note: Overfilling the final drive will cause the seals on the travel motor to allow hydraulic oil or water to enter the final drive. The final drive may become contaminated.

5. Clean oil level plug (1). Inspect the O-ring seal. Replace the O-ring seal if the O-ring seal is worn or damaged.
6. Install oil level plug (1).
7. Repeat the procedure for the other final drive.

i06969816

Final Drive Oil Sample - Obtain

SMCS Code: 4011-008; 4050-SM; 4050-008; 7542-008

WARNING

Hot oil and hot components can cause personal injury. Do not allow hot oil or hot components to contact skin.

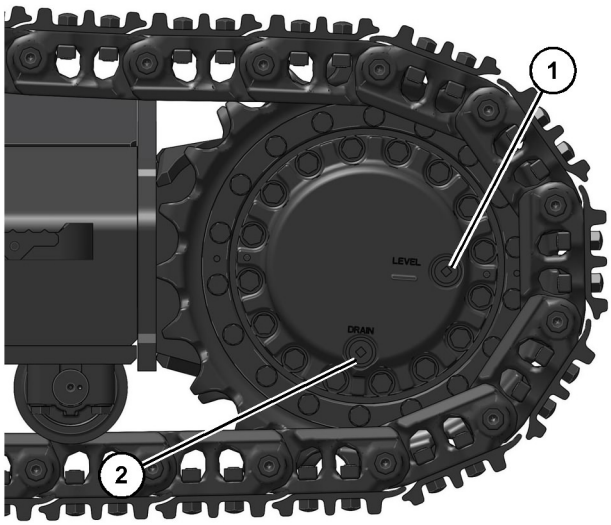

Illustration 720 g06182944

(1) Oil level plug
(2) Oil drain plug

1. Position the final drive so that oil drain plug (2) is at the bottom.

Note: Refer to Operation and Maintenance Manual, “General Hazard Information” for information on Containing Fluid Spillage.

2. Remove oil level plug (1).
3. Obtain a sample of the final drive oil through the hole for the oil level plug.
4. Install oil level plug (1).

Refer to Special Publication, SEBU6250, “Caterpillar Machine Fluids Recommendations” “S·O·S Oil Analysis” for more information on obtaining a sample of the final drive oil. For additional information about taking an oil sample, refer to Special Publication, PEGJ0047, “How To Take A Good Oil Sample”.

i07088575

Fuel Cap Filter - Replace

SMCS Code: 1261-510

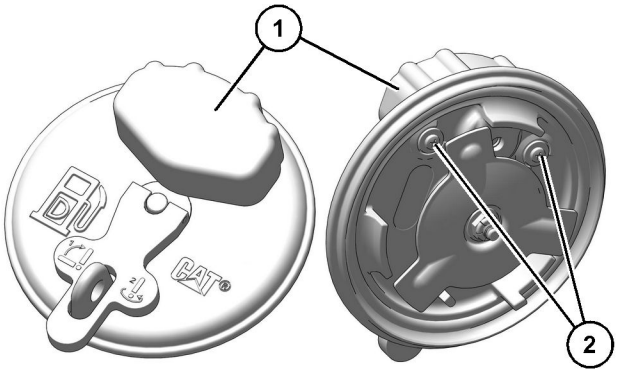

Illustration 721 g06220524

1. Remove the fuel cap.
2. Remove filter element screws (2) from the underside of the fuel cap and remove filter element (1).
3. Install a clean fuel cap filter element.
4. Install the screws to secure the filter element to the fuel cap.
5. Install the fuel tank cap.

i07318401

Fuel System - Prime

SMCS Code: 1250-548

WARNING

Fuel leaked or spilled onto hot surfaces or electrical components can cause a fire. To help prevent possible injury, turn the start switch off when changing fuel filters or water separator elements. Clean up fuel spills immediately.

NOTICE
Care must be taken to ensure that fluids are contained during performance of inspection, maintenance, testing, adjusting, and repair of the product. Be prepared to collect the fluid with suitable containers before opening any compartment or disassembling any component containing fluids.

Refer to Special Publication, PERJ1017, “Dealer Service Tool Catalog” for tools and supplies suitable to collect and contain fluids on Cat ® products.

Dispose of all fluids according to local regulations and mandates.

NOTICE
Do not loosen the fuel lines at the fuel manifold. The fittings may be damaged and/or a loss of priming pressure may occur when the fuel lines are loosened.

NOTICE
Do not allow dirt to enter the fuel system. Thoroughly clean the area around a fuel system component that will be disconnected. Fit a suitable cover over any disconnected fuel system components.

Prime the fuel system to fill the fuel filter, and prime the fuel system to purge trapped air. The fuel system should be primed under the following conditions:

- The fuel tank is running low.
- The machine has been stored.
- The fuel filter is being replaced.
- The fuel system has been repaired.

1. Turn the engine start switch to the ON position. Leave the engine start switch in the ON position for 4 minutes.

2. Verify that the water separator is full of fuel.

3. If the water separator is not full of fuel, turn the engine start switch OFF and then turn the engine start switch ON. Turning the engine start switch off and on will cycle the fuel priming pump again.

4. When the water separator is full of fuel, attempt to start the engine. If the engine starts and the engine runs rough or the engine misfires, operate at low idle until the engine is running smoothly. If the engine cannot be started, or if the engine continues to misfire or smoke, repeat Step 1.

i07318410

Fuel System Primary Filter (Water Separator) Element - Replace

SMCS Code: 1263-510-FQ

WARNING

Personal injury or death may result from failure to adhere to the following procedures.

Fuel leaked or spilled onto hot surfaces or electrical components can cause a fire.

Clean up all leaked or spilled fuel. Do not smoke while working on the fuel system.

Turn the disconnect switch OFF or disconnect the battery when changing fuel filters.

NOTICE
Do not fill the fuel filters with fuel before installing the fuel filters. The fuel will not be filtered and could be contaminated. Contaminated fuel will cause accelerated wear to fuel system parts.

The primary filter/water separator is located behind the access door on the right side of the machine.

Illustration 722 g06279640

1. Open the access door on the right side of the machine.

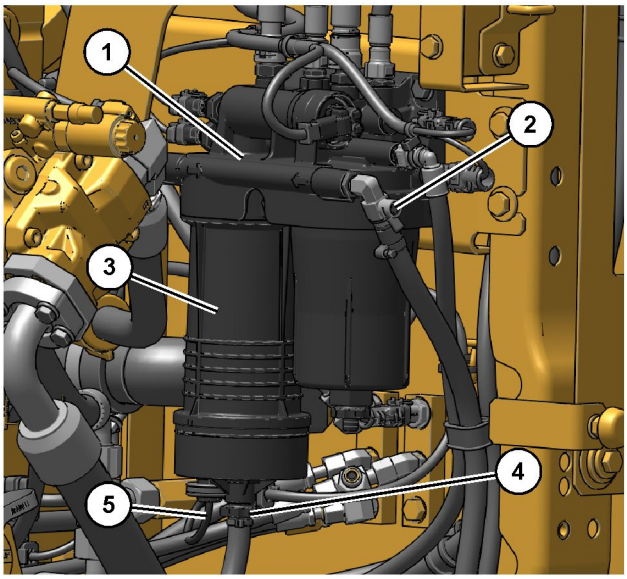

Illustration 723 g06281993

(1) Filter base
(2) Fuel shutoff valve
(3) Filter housing
(4) Drain valve
(5) Sensor

2. Turn fuel shutoff valve (2) to the closed position.

Note: Refer to Operation and Maintenance Manual, “Fuel Tank Shutoff and Drain Control” for information on the fuel shutoff valve.

3. Turn drain valve (4) counterclockwise to open. The drain valve is on the bottom of the water separator.

Note: Refer to Operation and Maintenance Manual, “General Hazard Information” for information that pertains to containing fluid spillage.

Note: Dispose of used fluids according to local regulations.

4. Close the drain valve (4).

5. Disconnect the water sensor (5) from the harness.

Note: Do not attempt to remove the sediment bowl from the housing. The sediment bowl is permanently attached to the housing. Attempting to remove the sediment bowl may damage the bowl.

Note: Do not use a chain type strap wrench to remove the fuel filter. Only use a filter wrench on the reinforced area (area with both horizontal and vertical reinforcing ribs) of the filter housing.

6. Unscrew filter housing (3). Rotate and remove a primary filter from drain valve (4). A filter wrench may be used on the filter housing to loosen the filter housing. Do not apply wrench to clear sediment bowl. Properly discard the used filter.

7. Clean the mounting base (1).

8. Lubricate the seal of the new filter with clean diesel fuel.

9. Install the new filter into the housing.

10. Tighten the filter housing (3) on the filter base (1) and tighten until the housing flange touches the filter base. Tighten the drain valve (4). Do not use tools to tighten the filter housing to the filter base.

11. Ensure that sensor (5) is in the correct position and connect to the wiring harness. If the sensor was removed from the bowl, install the sensor and tighten to 2.0 ± 0.2 N·m (18 ± 2 lb in).

12. Open the fuel shutoff valve (2).

13. Close the access door.

14. Prime the fuel system. Refer to Operation and Maintenance Manual, “Fuel System - Prime”.

i07318618

Fuel System Secondary Filter - Replace

SMCS Code: 1261-510

⚠ WARNING

Personal injury or death can result from a fire.

Fuel leaked or spilled onto hot surfaces or electrical components can cause a fire.

Clean up all leaked or spilled fuel. Do not smoke while working on the fuel system.

Turn the disconnect switch OFF or disconnect the battery when changing fuel filters.

NOTICE
Do not fill fuel filters with fuel before installing them. Contaminated fuel will cause accelerated wear to fuel system parts.

NOTICE
Do not allow dirt to enter the fuel system. Thoroughly clean the area around a fuel system component that will be disconnected. Fit a suitable cover over any disconnected fuel system components.

Illustration 724 g06279640

1. Open the access door on the right side of the machine.

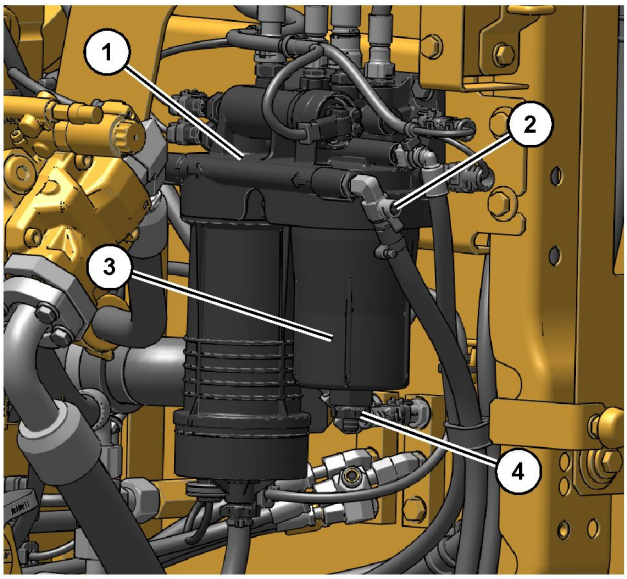

Illustration 725 g06282038

(1) Filter base
(2) Fuel shutoff valve
(3) Secondary filter housing
(4) Drain valve

2. Turn fuel shutoff valve (2) to the closed position.

Note: Refer to Operation and Maintenance Manual, “Fuel Tank Shutoff and Drain Control” for information on the fuel shutoff valve.

3. Turn drain valve (4) counterclockwise to open and drain.

Note: Refer to Operation and Maintenance Manual, “General Hazard Information” for information that pertains to containing fluid spillage.

Note: Dispose of used fluids according to local regulations.

4. Loosen filter housing (3) to drain the rest of fuel inside the filter housing. A wrench may be used to loosen the filter housing.
5. Close the drain valve (2).
6. Unscrew filter housing (3) and rotate and remove a secondary filter from the drain valve (4). A wrench may be used to loosen the filter housing. Properly discard the used filter.
7. Clean the mounting base (1).
8. Lubricate the seal of the new filter with clean diesel fuel.
9. Install the new filter into the housing.
10. Install the filter housing (3) on the filter base (1) and tighten to 50 N·m (37 lb ft). Tighten the drain valve(4).
11. Open the fuel shutoff valve (2).
12. Prime the fuel system. See Operation and Maintenance Manual, “Fuel System - Prime” for instructions.
13. Close the access door.

i07318648

Fuel System Water Separator - Drain

SMCS Code: 1263

1. Open the access door on the right side of the machine.
2. Provide a suitable container for used fluid.

Note: Refer to Operation and Maintenance Manual, “General Hazard Information” for information on Containing Fluid Spillage.

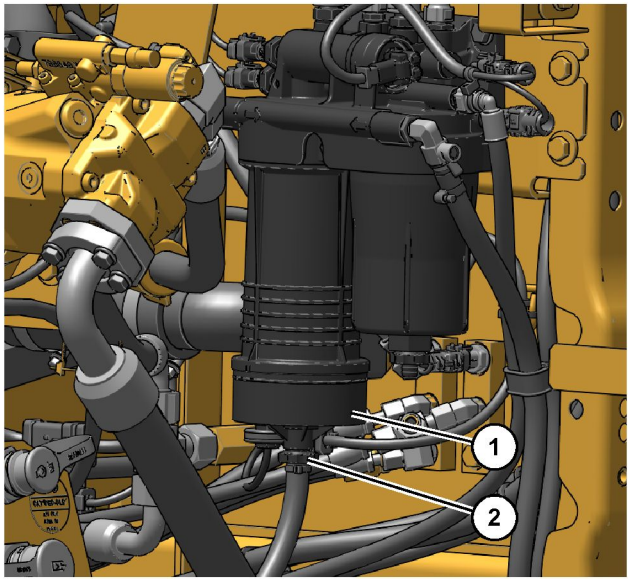

Illustration 726 g06282052

(1) Bowl
(2) Drain valve

3. Check bowl (1) in the bottom of the water separator. Open drain valve (2). Drain the water and sediment in the bowl.

Note: Dispose of used fluids according to local regulations.

4. Close drain valve (2).

5. Close the access door.

i07321530

Fuel Tank Strainer - Clean

SMCS Code: 1273-070-STR

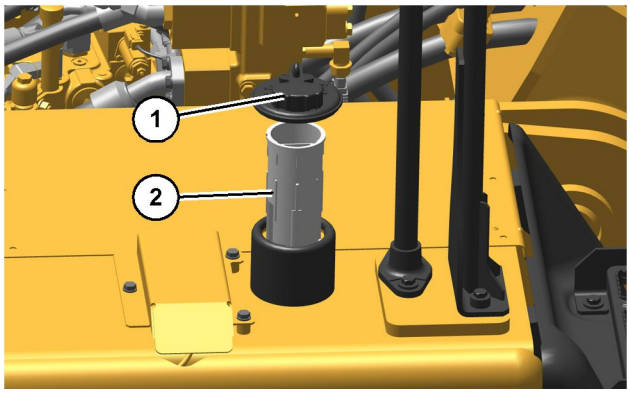

Illustration 727 g06283169

1. Remove fuel tank cap (1).

2. Remove strainer (2) from the filler opening.

3. Wash the strainer in a clean, nonflammable solvent.

4. Install the strainer into the filler opening.

5. Install the fuel tank cap.

i07348843

Fuel Tank Water and Sediment - Drain

SMCS Code: 1273-543

Refer to this Operation and Maintenance Manual, “Fuel Tank Shutoff and Drain Control” for the exact location of the fuel tank drain valve

Note: Refer to Operation and Maintenance Manual, “General Hazard Information” for information on containing fluid spillage.

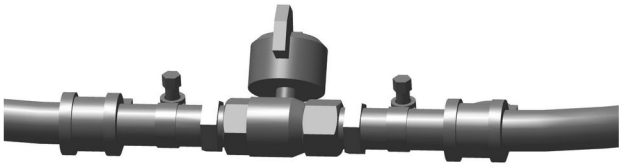

Illustration 728 g06289703

Typical example

1. Open the drain valve by turning the valve counterclockwise. Allow the water and the sediment to drain into a suitable container.

Note: Dispose of drained fluids according to local regulations.

2. Close the drain valve by turning the valve clockwise.

i07321670

Fuses - Replace

SMCS Code: 1417-510

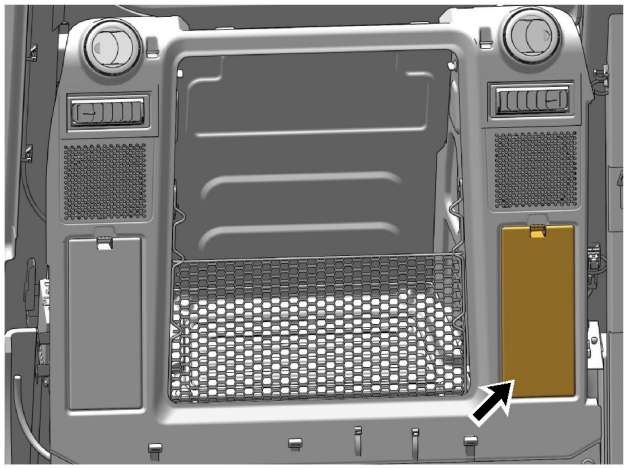

Illustration 729 g06181624

The fuse panel is on the left side of the interior storage box. Remove the cover to access the fuses.

Fuses – Fuses protect the electrical system from damage that is caused by overloaded circuits. Change a fuse if the element separates. If the element of a new fuse separates, check the circuit and/or repair the circuit.

NOTICE
Always replace fuses with the same type and capacity fuse that was removed. Otherwise, electrical damage could result.

NOTICE
If it is necessary to replace fuses frequently, an electrical problem may exist.

Contact your Cat dealer.

To replace a fuse, use the puller that is stored in the fuse panel.

The following list identifies the circuits that are protected by each fuse. The amperage for each fuse is included with each circuit.

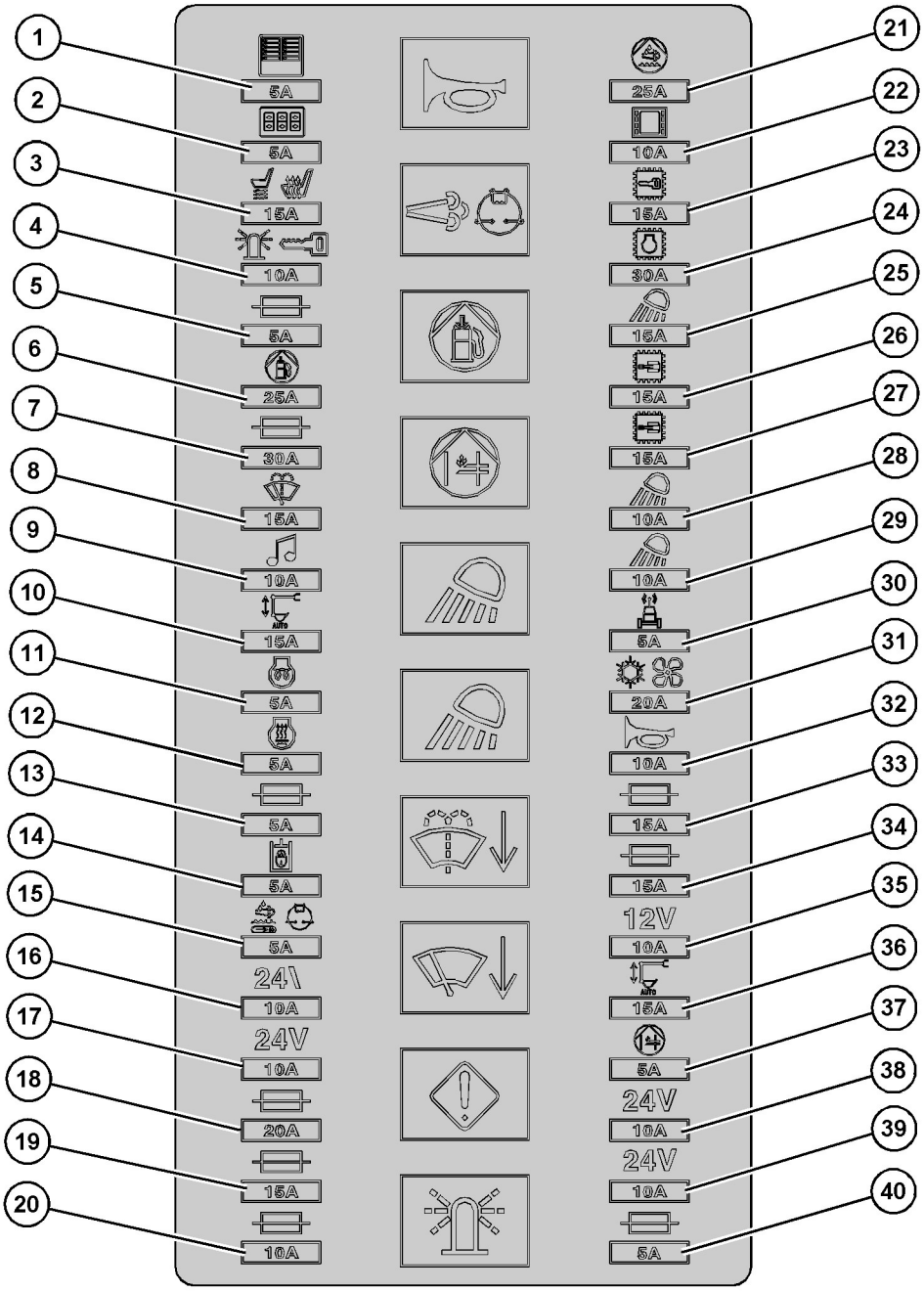

Illustration 730 g06209041

(1) Heater and Air Conditioner Control and Monitor – 5 Amp

(2) Electronic Switch Control Panel – 5 Amp

(3) Grip, Seat Heater, and Air Suspension Seat – 15 Amp

(4) Beacon – 10 Amp

(5) Spare – 5 Amp

(6) Electric Refueling Pump – 25 Amp

(7) Spare – 30 Amp

(8) Window Wiper and Window Washer – 15 Amp

(9) Radio – 10 Amp

(10) Cat Grade Control – 15 Amp

(11) Glow Relay – 5 Amp

(12) Ether Solenoid – 5 Amp

(13) Spare – 5 Amp

(14) Hydraulic Lock – 5 Amp

(15) Keep Alive – 5 Amp

(16) Auxiliary Circuit – 10 Amp

(17) Auxiliary Circuit – 10 Amp

(18) Spare – 20 Amp

(19) Spare – 15 Amp

(20) Spare – 10 Amp

(21) DEF Pump – 25 Amp

(22) Display and ET Connector – 10 Amp

(23) Body Control Module – 15 Amp

(24) Engine Electronic Control Module – 30 Amp

(25) Dome Light – 15 Amp

(26) Primary Electronic Control Module – 15 Amp

(27) Secondary Electronic Control Module – 15 Amp

(28) Boom Lamp Relay – 10 Amp

(29) Boom Lamp – 10 Amp

(30) Product Link Module – 5 Amp

(31) Air Conditioner and Heater Blower – 20 Amp

(32) Horn – 10 Amp

(33) Spare – 15 Amp

(34) Spare – 15 Amp

(35) 12V Converter – 10 Amp

(36) Cat Grade Control – 15 Amp

(37) Fuel Lifting Pump – 5 Amp

(38) Auxiliary Circuit – 10 Amp

(39) Auxiliary Circuit – 10 Amp

(40) Spare – 5 Amp

Relays

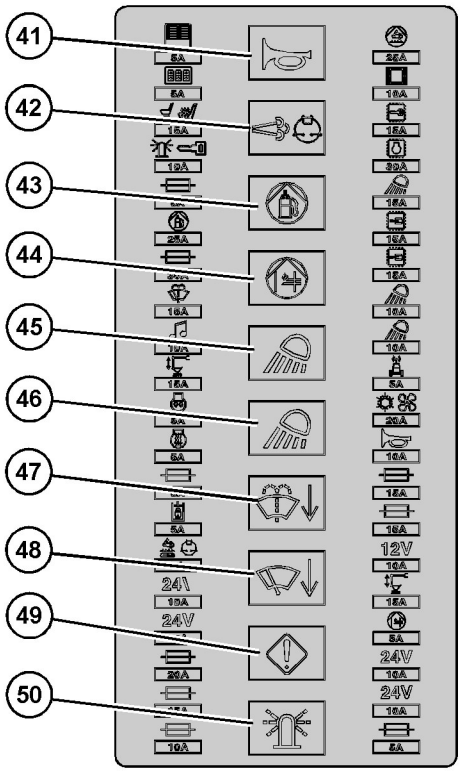

Illustration 731 g06209071

(41) Horn – Relay

(42) DEF Pump – Relay

(43) Priming Pump – Relay

(44) Lifting Pump – Relay

(45) Boom Light – Relay

(46) Chassis Light and Cab Light – Relay

(47)Lower Washer – Relay

(48) Lower Wiper – Relay

(49) Caution – Relay

(50)Beacon – Relay

Power Fuse Module

Illustration 732 g06266781

The power fuse module is located behind the rear access door on the left side of the machine. Remove the cover to access the fuses.

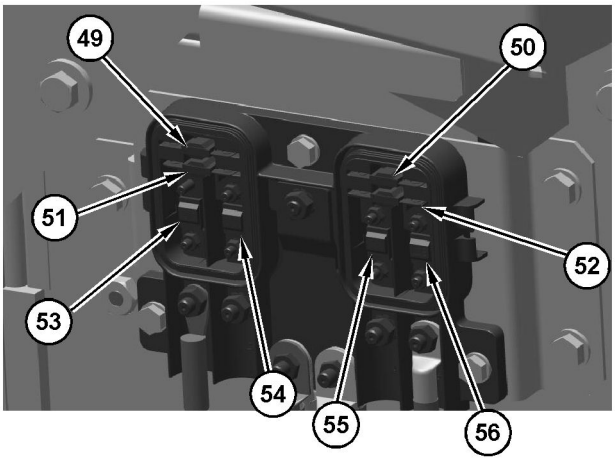

Illustration 733 g06266787

Spare (49- 52) – The fuse module also includes spare fuses (5) which can be used if one of the installed fuses opens. One spare fuse is provided for each fuse in use.

Main Circuit 100 Amp (53) – This fuse is designed to protect the wires between the batteries and the fuses. If the wires are shorted to the machine body, this fuse would minimize the damage to the wires.

Glow Plug Circuit 70 Amp (54) – This fuse is designed to protect the glow plugs.

Diesel Exhaust Fluid (DEF) Pump Circuit 40 Amp (55) – This fuse is designed to protect the DEF pump circuit.

Alternator Circuit 125 Amp (56) – This fuse is designed to protect the alternator. If the batteries are installed with reversed polarity, the fuse would prevent the alternator from damaging the rectifier.

i07915095

Hydraulic System Oil - Change

SMCS Code: 5056-044

Cat HYDO Advanced 10 Oil Change Interval

The standard Cat HYDO Advanced 10 oil change interval is every 6000 service hours or 3 years. But a 6000 service hour or 3-year maintenance interval for hydraulic oil (change) is strongly recommended with S·O·S monitoring of the hydraulic oil after 3000 service hours. The interval for S·O·S monitoring is every 500 hours. The Oil change is strongly recommended when the oil deterioration or contamination is detected. The maintenance interval for the hydraulic oil filter is not changed.

Hydraulic Hammer Use

The use of hydraulic hammers shortens the life of hydraulic oil. If a hydraulic hammer is used, the maintenance interval is shortened, refer to Table 34 for the intervals.

Table 34

Percentage of Hammer Use	Hydraulic System Oil - Change
50%	Every 1000 service hours
100%	Every 600 service hours

Procedure to Change the Hydraulic Oil

WARNING

Hot oil and hot components can cause personal injury. Do not allow hot oil or hot components to contact skin.

NOTICE
Care must be taken to ensure that fluids are contained during performance of inspection, maintenance, testing, adjusting, and repair of the product. Be prepared to collect the fluid with suitable containers before opening any compartment or disassembling any component containing fluids.

Refer to Special Publication, PERJ1017, “Dealer Service Tool Catalog” for tools and supplies suitable to collect and contain fluids on Cat ® products.

Dispose of all fluids according to local regulations and mandates.

1. Park the machine on level ground. Lower the bucket to the ground so that the stick is vertical.

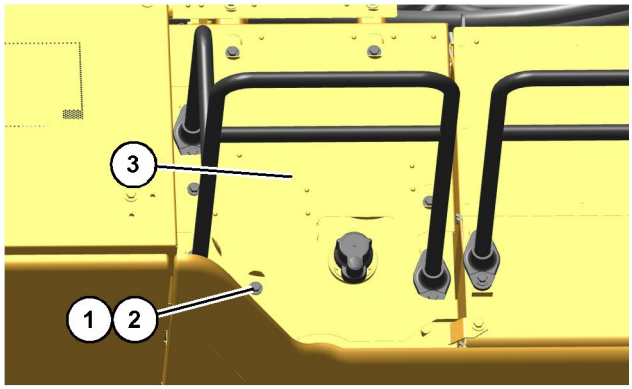

Illustration 734 g06283567

2. Remove five bolts (1) and washers (2). Remove cover (3) from the top of the hydraulic tank.

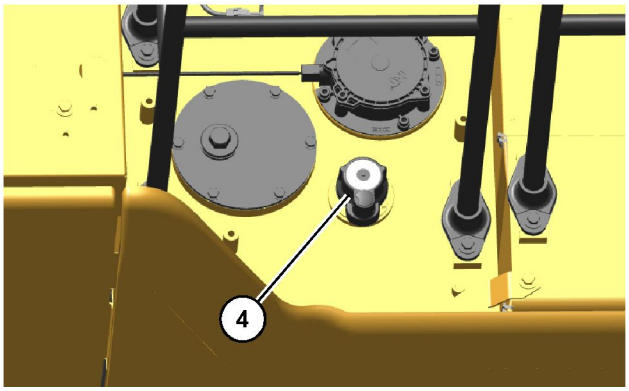

Illustration 735 g06283580

3. Clean the area thoroughly to keep dirt out of the screen cover and filler cap (4).

WARNING

Pressurized system!

The hydraulic tank contains hot oil under pressure. To prevent burns from the sudden release of hot oil, relieve the tank pressure with the engine off. Relieve pressure by slowly turning the cap until the cap reaches the secondary stop.

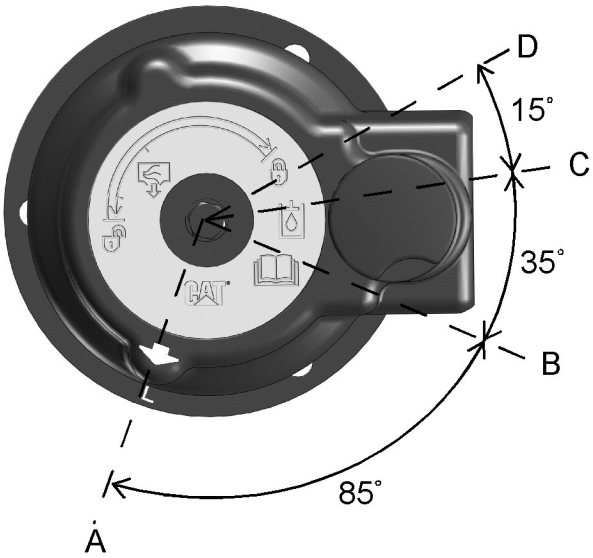

Illustration 736 g06184990

Filler cap

(A) LOCK position
(B) PRESSURE RELEASE - START position
(C) PRESSURE RELEASE - END position
(D) OPEN position

4. Release the pressure that may be present in the return hydraulic circuit with the following procedure. Refer to Illustration 736 for filler cap positions.

a. Turn the filler cap counterclockwise and move the arrow from position (A) to position (B).

b. Release the pressure for a minimum of 45 seconds by moving the arrow from position (B) to position (C).

c. Move the arrow from position (C) to position (D).

d. After the tank pressure is relieved, tighten the filler cap.

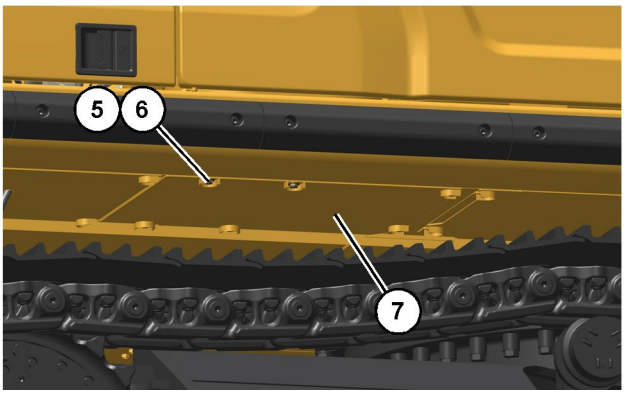

Illustration 737 g06283591

5. Remove six bolts (5) and washers (6). Remove the hydraulic tank access cover (7) that is located under the upper structure. Removing the cover will allow access to the drain valve.

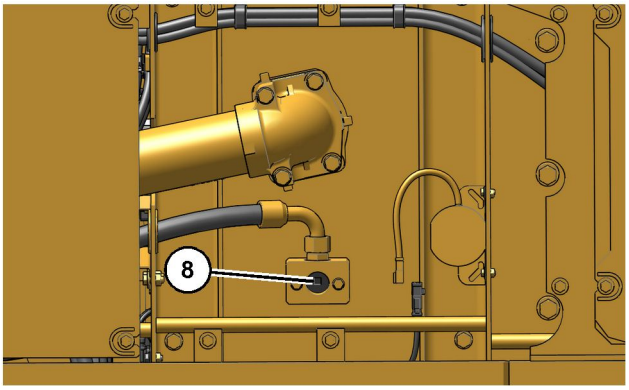

Illustration 738 g06283598

(8) Plug

Note: Refer to Operation and Maintenance Manual, “General Hazard Information” for information that pertains to containing fluid spillage.

6. Remove plug (8).

7. Inspect the O-ring. Replace the O-ring if wear or damage is evident.

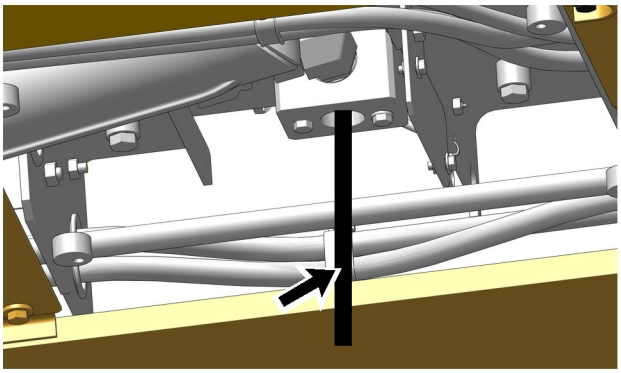

Illustration 739 g06182192

8. Use a bar to push the plunger up to allow the oil to drain.

9. Drain the oil into a suitable container.

Note: Dispose of used fluids according to local regulations.

10. After the oil has been drained, clean drain plug (5) and install. Tighten the plug to 68 ± 7 N·m (50 ± 5 lb ft).

11. Open the access door on the right side of the machine.

12. Clean the pump, the hydraulic lines, and the hydraulic tank.

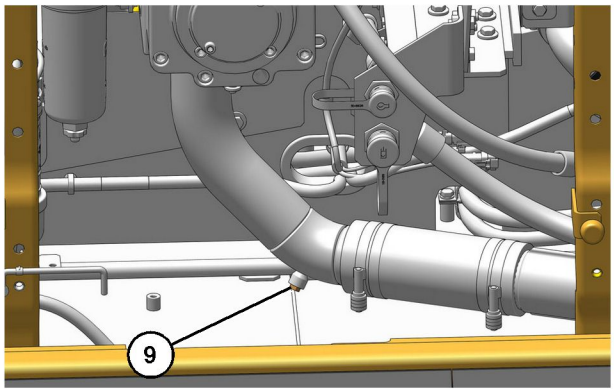

Illustration 740 g06283634

13. Remove plug (9) from the tube. Allow the oil to drain into a container.

14. Inspect the O-ring. Replace the O-ring if wear or damage is evident.

15. Clean the plug. Install the plug and the O-ring into the drain port.

Hydraulic Tank Screen - Clean

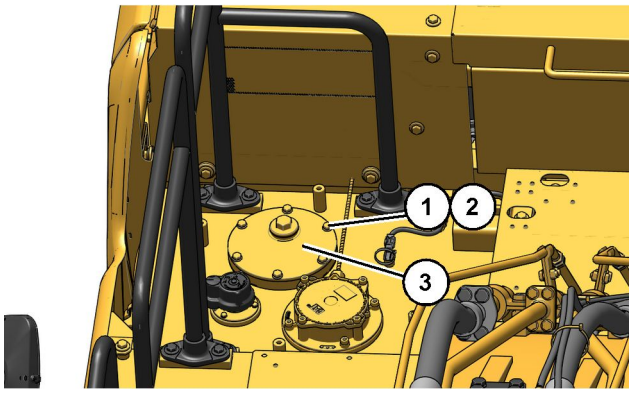

Illustration 741 g06283653

(1) Bolts
(2) Washers
(3) Cover

1. Remove bolts (1), washers (2), and cover (3).

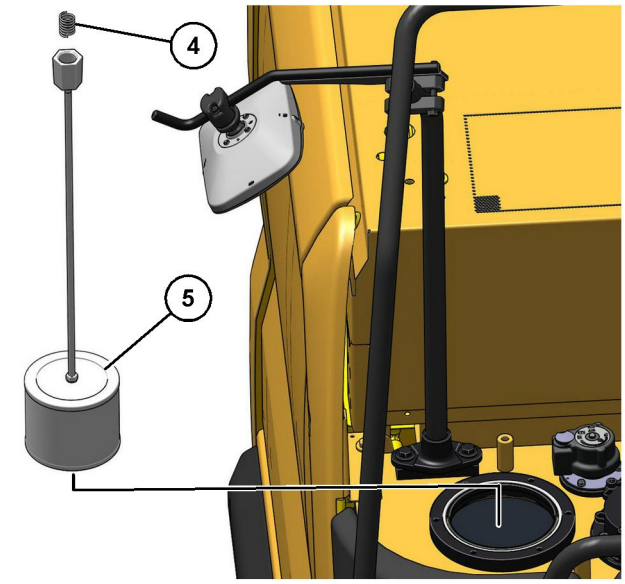

Illustration 742 g06283658

(4) Spring
(5) Screen

2. Remove spring (4) and screen (5).

Note: Do not allow spring (4) to fall back into the tank.

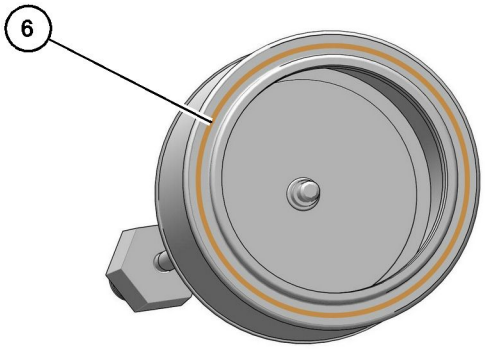

Illustration 743 g06283660

(6) O-ring seal

3. Remove O-ring seal (6) from the screen.

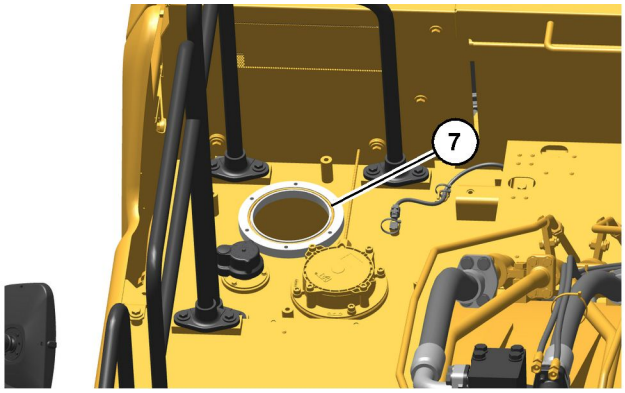

Illustration 744 g06283663

(7) O-ring seal

4. Remove O-ring seal (7) from the tank.

5. Inspect O-ring seals (6) and (7). Replace the O-ring seals if wear or damage is evident.

6. Wash the screen in a clean nonflammable solvent. Allow the screen to dry. Inspect the screen. Replace the screen, if the screen is damaged.

7. Install O-ring seal (6) on screen (5).

8. Install screen (5) and spring (4). Then install cover (3), washers (2), and bolts (1).

Note: Make sure that the O-ring seals and the spring are properly positioned during installation.

Case Drain Filter - Clean

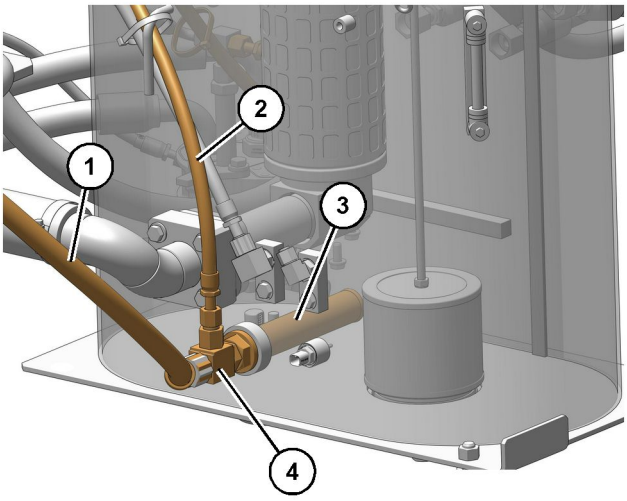

Illustration 745 g06220559

(1) Hose
(2) Hose
(3) Case drain filter
(4) Tee

1. Remove hose (1) and hose (2) from tee (4). Remove tee (4).
2. Remove case drain filter (3) from the hydraulic tank.
3. Wash the screen of the case drain filter in a clean nonflammable solvent. Allow the filter to dry. Inspect the filter. Replace the filter if the filter is damaged.
4. Inspect the O-ring seal on the filter. Replace the O-ring seal if wear or damage is evident.
5. Install the filter in the hydraulic tank. Tighten the filter to 175 ± 26 N·m (129 ± 19 lb ft).
6. Install the tee onto the filter. Tighten the tee to 65 ± 10 N·m (48 ± 7 lb ft).
7. Install the two hoses onto the tee.

Hydraulic System Oil - Fill

1. Fill the hydraulic system oil tank. Refer to Operation and Maintenance Manual, “Capacities (Refill)”.
2. Inspect the O-ring seal on the filler cap for damage. Replace the O-ring, if necessary. Clean the filler cap. Install the filler cap.

Note: Make no attempt to start the engine until the pump has been filled with hydraulic oil. Serious damage to the hydraulic components can result.

Main Pump and Hydraulic System Air Purge

1. Access the hydraulic pump. The hydraulic pump is located behind the right access door.

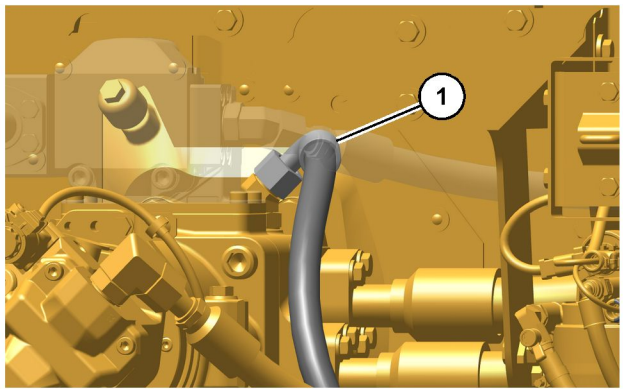

Illustration 746 g06284191

(1) Hose

2. While the engine is stopped, remove hose (1) from the top of the pump. Add hydraulic oil through the opening.
3. After the pump has been filled with oil, install drain hose (1).
4. Start the engine. When the engine is at low idle, raise the boom. Hold the boom in this position.
5. Stop the engine. Slowly lower the boom until the work tool is on the ground. The hydraulic tank will pressurize.
6. Slowly loosen hose (1) until hydraulic oil flows from the connection. Oil flowing from the connection indicates that the air has been released from the pump.
7. Tighten hose (1).
8. Start the engine. Operate the engine at idling speed for 5 minutes.

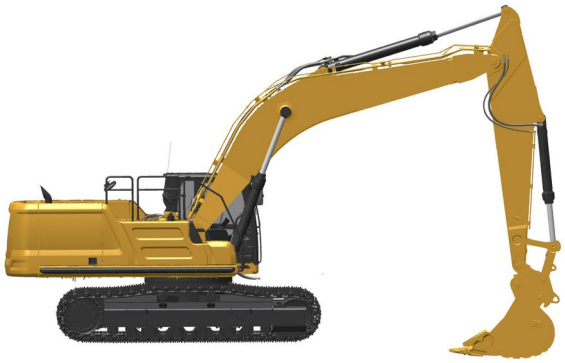

Illustration 747 g06284230

9. Operate the joysticks to circulate the hydraulic oil. Lower the bucket to the ground so that the stick is vertical to the ground. Stop the engine.

10. Check the hydraulic oil level.

Reference: For the correct procedure, refer to Operation and Maintenance Manual, “Hydraulic System Oil Level - Check”.

11. Close the access door.

12. Close the engine hood and latch the engine hood.

Fast Fill

If your machine is equipped with a deluxe service center, you may drain the hydraulic oil through the fast fill port. You may also add the hydraulic oil through a fast fill port.

Illustration 748 g06279640

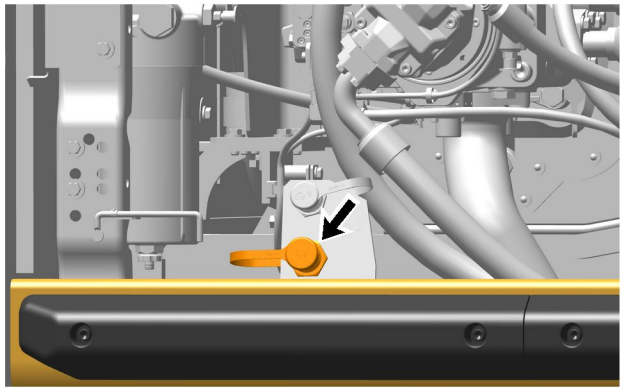

Illustration 749 g06284237

1. Remove the dust cover.

2. Attach the hose to the male coupling.

3. Drain the oil or add the oil, as needed.

i07915108

Hydraulic System Oil Filter (Return) - Replace

SMCS Code: 5068-510-RJ

WARNING

Hot oil and hot components can cause personal injury. Do not allow hot oil or hot components to contact skin.

The return filter is a cartridge type filter. The amount of foreign material that enters the hydraulic system is reduced when the filter element is replaced.

Two different filters are available for the return filter. One filter is used for standard applications such as digging and normal use of a hammer. The second filter is used for an application such as demolishing a ceiling in a tunnel with a hammer.

Note: If the message display shows that the hydraulic return filter is plugged, turn off the machine. After you make sure that the warning has disappeared, start the machine and run the machine on level ground for approximately 10 minutes. If the warning still appears in the message display, inspect the filter and replace the filter, if necessary.

Hydraulic Hammer Use

The use of hydraulic hammers shortens the life of hydraulic oil. If a hydraulic hammer is used, the maintenance interval is shortened, refer to Table35 for the intervals.

Table 35

Percentage of Hammer Use	Hydraulic System Oil Filter (Return) - Replace
50%	Every 500 service hours
100%	Every 250 service hours

Return Filter Replacement Procedure

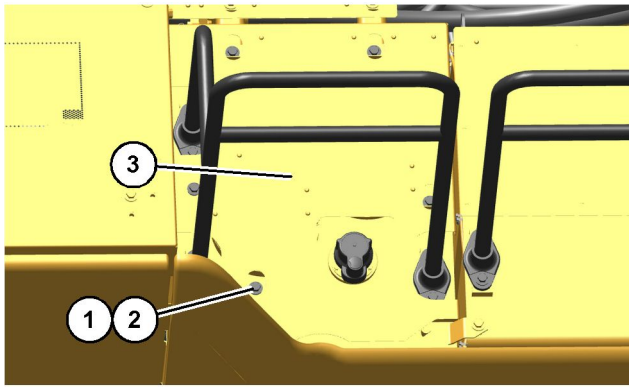

Illustration 750 g06283567

1. Remove seven bolts (1) and washers (2). Remove cover (3) from the top of the hydraulic tank.
2. Clean the area thoroughly to keep dirt out of the return filter and filler cap.

WARNING

Pressurized system!

The hydraulic tank contains hot oil under pressure. To prevent burns from the sudden release of hot oil, relieve the tank pressure with the engine off. Relieve pressure by slowly turning the cap until the cap reaches the secondary stop.

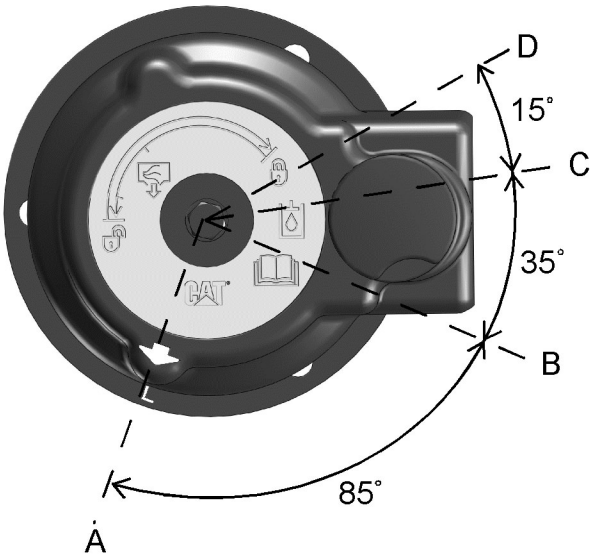

Illustration 751 g06184990

Filler cap

(A) LOCK position
(B) PRESSURE RELEASE - START position
(C) PRESSURE RELEASE - END position
(D) OPEN position

3. Release the pressure that may be present in the return hydraulic circuit with the following procedure. Refer to Illustration 751 for filler cap positions.
   a. Turn the filler cap counterclockwise and move the arrow from position (A) to position (B).
   b. Release the pressure for a minimum of 45 seconds by moving the arrow from position (B) to position (C).
   c. Move the arrow from position (C) to position (D).
   d. After the tank pressure is relieved, tighten the filler cap on the hydraulic tank to position (A).
4. Check the hydraulic system oil level.

Reference: For the correct procedure, refer to Operation and Maintenance Manual, “Hydraulic System Oil Level - Check”.

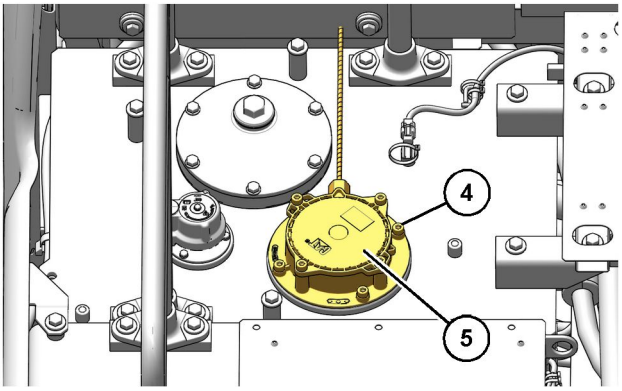

Illustration 752 g06284250

5. Remove four bolts (4), disconnect the harness connector from the filter bypass switch, and remove filter assembly (5) from the tank.

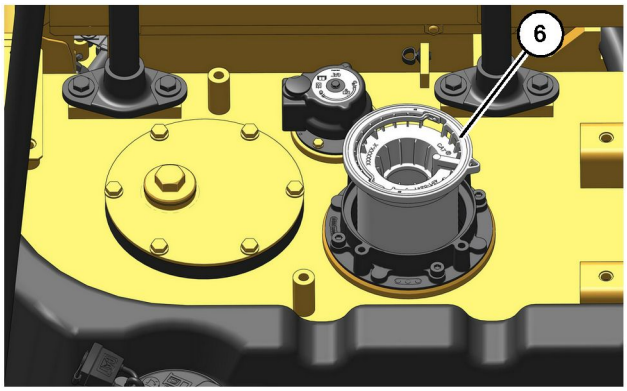

Illustration 753 g06254829

6. Remove filter element (6) and discard. Install a new element into the filter case.

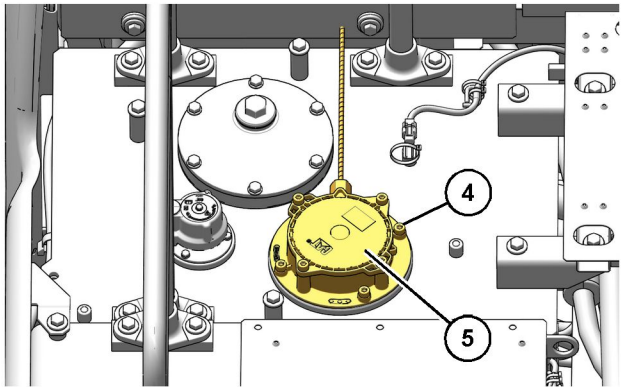

Illustration 754 g06284250

7. Place filter assembly (5) into position in the tank. Install four bolts (4) and tighten to 30 ± 7 N·m (22 ± 5 lb ft). Install the harness connector on the filter bypass switch.

i07323743

Hydraulic System Oil Level - Check

SMCS Code: 5050-535

WARNING

Hot oil and hot components can cause personal injury. Do not allow hot oil or hot components to contact skin.

NOTICE

Never remove the fill/vent plug from the hydraulic tank if the oil is hot.

Air can enter the system and cause pump damage.

Note: In addition to an oil level gauge, your machine may be equipped with an automated function for checking fluid levels. Refer to Operation and Maintenance Manual, “Monitoring System” regarding the automated system.

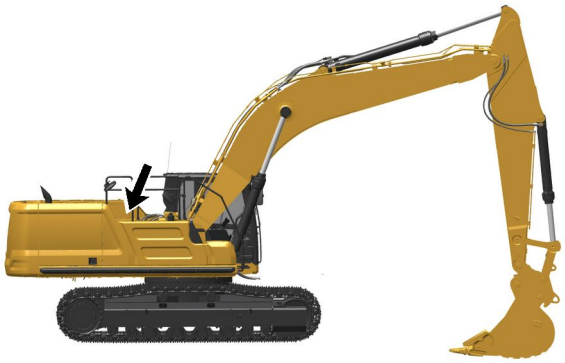

Illustration 755 g06284260

The hydraulic oil tank is on the right side of the machine.

1. Park the machine on level ground. Lower the bucket to the ground with the stick in a vertical position, as shown.
2. Open the access door on the right side of the machine.

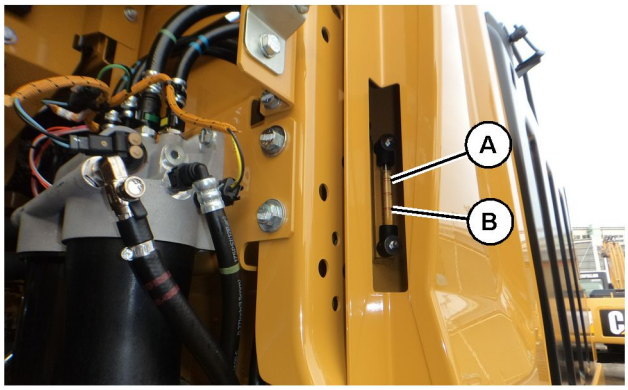

Illustration 756 g06216919

(A) High temperature range
(B) Low temperature range

3. For a cold machine, maintain the hydraulic oil level in the low temperature range (B). For a machine that is at normal operating temperature, maintain the hydraulic oil level in the high temperature range (A).
4. Close the access door.

Note: Perform Step 5 through Step 8 if the oil level is low.

Note: Refer to Operation and Maintenance Manual, “General Hazard Information” for information that pertains to Containing Fluid Spillage.

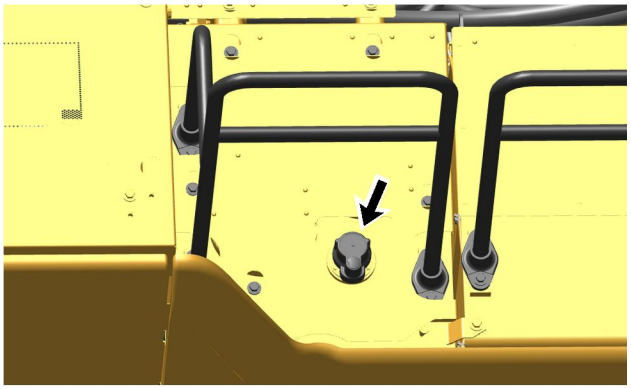

Illustration 757 g06284277

WARNING

Pressurized system!

The hydraulic tank contains hot oil under pressure. To prevent burns from the sudden release of hot oil, relieve the tank pressure with the engine off by slowly turning the cap approximately 1/8 of a turn until the cap reaches the secondary stop.

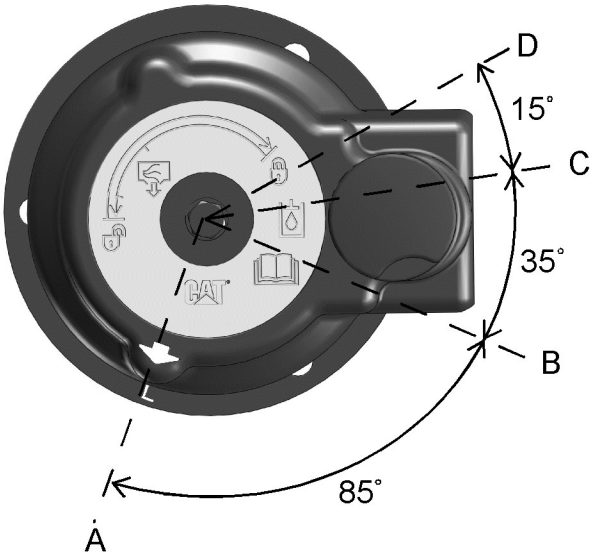

Illustration 758 g06184990

Filler cap

(A) LOCK position
(B) PRESSURE RELEASE - START position
(C) PRESSURE RELEASE - END position
(D) OPEN position

5. Release the pressure that may be present in the return hydraulic circuit with the following procedure. Refer to Illustration 758 for filler cap positions.

a. Turn the filler cap counterclockwise, with no downward force applied, and move the arrow from position (A) to position (B).

b. Release the pressure for a minimum of 45 seconds by moving the arrow from position (B) to position (C).

c. Push the center of the filler cap down. Without tilting the filler cap, move the arrow from position (C) to position (D).

d. The hydraulic tank pressure is relieved. Remove the filler cap.

6. Add oil if necessary. See Operation and Maintenance, “Lubricant Viscosities”

7. Check the O-ring seal of the filler cap. Replace the O-ring seal if the O-ring seal is damaged.

8. Clean the filler cap. Tighten the filler cap on the hydraulic tank to position (A).

i07323802

Hydraulic System Oil Sample - Obtain

SMCS Code: 5050-008-OC; 5095-008; 5095-SM; 7542-008; 7542

Note: If Cat HYDO Advanced hydraulic oils are used, the hydraulic oil change interval is extended to 6000 hours. S·O·S services after 3,000 hour is recommended. Consult your Cat dealer for details.

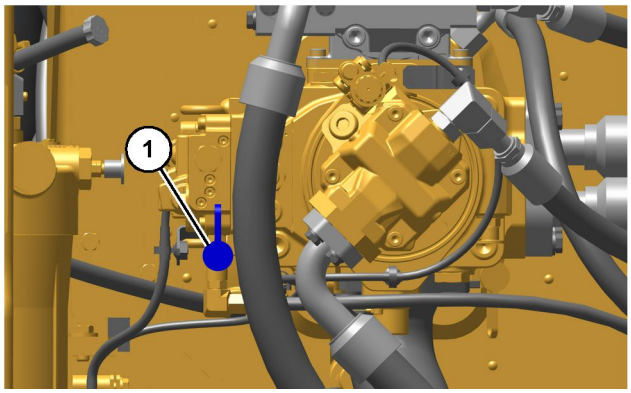

Illustration 759 g06284299

The hydraulic oil sampling valve (1) is on main hydraulic pump housing. Obtain a sample of the hydraulic oil from the hydraulic oil sampling valve. Refer to Special Publication, SEBU6250, “S·O·S Oil Analysis” for information that pertains to obtaining a sample of the hydraulic oil. Refer to Special Publication, PEGJ0047, “How To Take A Good Oil Sample” for more information about obtaining a sample of the hydraulic oil.

i03753191

Indicators and Gauges - Test

SMCS Code: 7450-081; 7490-081

1. Look for broken lenses on the gauges, broken indicator lights, broken switches, and other broken components in the cab.

2. Start the engine.

3. Look for inoperative gauges.

4. Turn on all machine lights. Check for proper operation.

5. Move the machine forward. Release the travel levers and the travel pedals. The machine should stop.

6. Stop the engine.

7. Make any repairs that are required before operating the machine.

i08066994

Light Emitting Diode Lamp (LED) - Replace

SMCS Code: 1434-510

1. Remove the electrical power from the light emitting diode (LED) lamp.

2. Disassemble the housing for the LED lamp to have access to the bulb.

Note: On some LED lamps, the bulb is a part of the lens assembly. The bulb is not removed separately from the lens assembly. Replace the entire lens assembly on these LED lamps.

3. Remove the bulb from the LED lamp.

4. Install the replacement bulb in the LED lamp.

If the bulb is a part of the lens assembly, install the replacement lens assembly in the LED lamp.

5. Reassemble the housing for the LED lamp. Ensure that any printing on the lens is oriented correctly for the LED lamp mounting position on the machine.

6. Reattach the electrical power to the LED lamp.

7. Check the LED lamp for proper operation.

Note: Consult your Cat dealer for additional information on LED lamps.

i07833447

Oil Filter (Hydraulic Hammer) - Replace
(If Equipped)

SMCS Code: 5068-510

WARNING

Hot oil and hot components can cause personal injury. Do not allow hot oil or hot components to contact skin.

The use of hydraulic hammers shortens the life of hydraulic oil. If a hydraulic hammer is used, the maintenance interval is shortened, refer to Table 36 for the intervals.

Table 36

Percentage of Hammer Use	Oil Filter (Hydraulic Hammer) - Replace
50%	Every 250 service hours
100%	Every 100 service hours

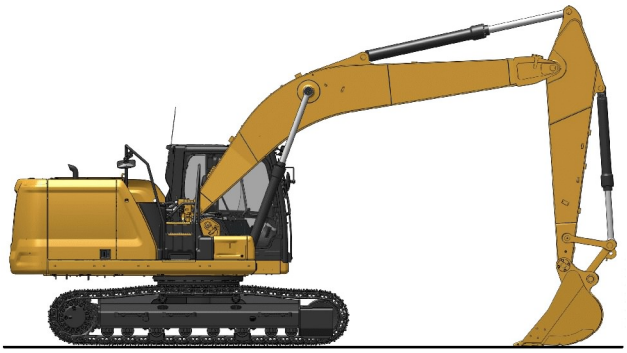

Illustration 760 g06181120

1. Park the machine on level ground in the service position as shown.
2. Move the hydraulic lockout control to the UNLOCKED position.
3. Turn the engine start switch to the ON position.
4. Move the joysticks and the travel levers/pedals to the full stroke positions to relieve the pressure in the hydraulic lines.
5. Turn the engine start switch to the OFF position and return the lever for the hydraulic lockout control to the LOCKED position.

WARNING

Pressurized system!

The hydraulic tank contains hot oil under pressure. To prevent burns from the sudden release of hot oil, relieve the tank pressure with the engine off. Relieve pressure by slowly turning the cap until the cap reaches the secondary stop.

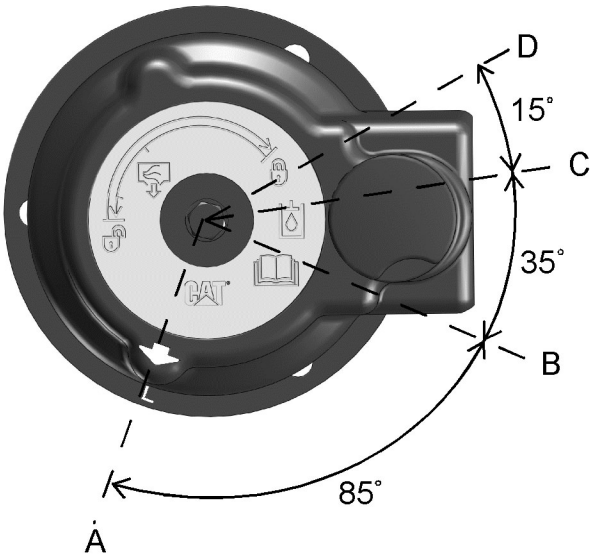

Illustration 761 g06184990

Filler cap

(A) LOCK position
(B) PRESSURE RELEASE - START position
(C) PRESSURE RELEASE - END position
(D) OPEN position

6. Release the pressure that may be present in the return hydraulic circuit with the following procedure. Refer to Illustration 761 for filler cap positions.
   a. Turn the filler cap counterclockwise and move the arrow from position (A) to position (B).
   b. Release the pressure for a minimum of 45 seconds by moving the arrow from position (B) to position (C).
   c. Move the arrow from position (C) to position (D).
   d. After the tank pressure is relieved, remove the filler cap.
7. The oil filter for the hammer is located near the base of the boom.

Note: Some configurations may invert the hammer filter installation.

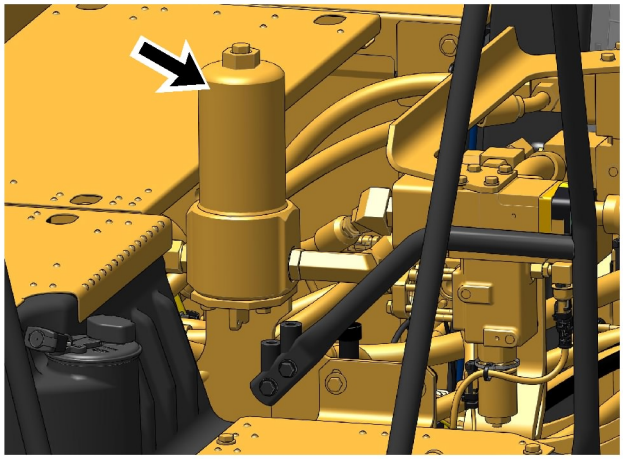

Illustration 762 g06211151

8. Position a suitable container to contain the oil.

Note: Refer to Operation and Maintenance Manual, “General Hazard Information” for information on containing fluid spillage.

9. Loosen the filter housing and remove. Inspect the plug on the top of the housing. If there are signs of leakage, replace the O-ring on the plug. Tighten the plug to59 ± 5 N·m (44 ± 4 lb ft).

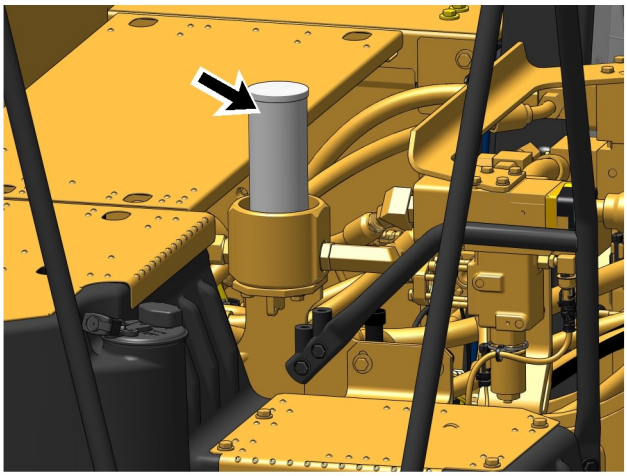

Illustration 763 g06211156

10. Remove the filter element and discard. The element cannot be reused.

Note: Used filter elements should always be disposed of according to local regulations.

11. Install the new filter element.

12. Clean the filter housing and install on the filter base. Tighten the nut on the filter case to 98 ± 10 N·m (72 ± 7 lb ft).

13. Start the engine and operate the machine slowly for 10 to 15 minutes. Move each cylinder evenly through several cycles and operate the hammer.

14. Return the machine to the service position. Check the machine for oil leaks.

15. Stop the engine.

16. Check the hydraulic oil level.

Reference: For the correct procedure, refer to Operation and Maintenance Manual, “Hydraulic System Oil Level - Check”.

i07349186

Oil Filter - Inspect

SMCS Code: 1308-507; 5068-507

Inspect a Used Filter for Debris

Illustration 764 g06224663

The element is shown with debris.

Use a filter cutter to cut the filter element open. Spread apart the pleats and inspect the element for metal and for other debris. An excessive amount of debris in the filter element can indicate a possible failure.

If metals are found in the filter element, a magnet can be used to differentiate between ferrous metals and nonferrous metals.

Ferrous metals can indicate wear from steel parts and on cast iron parts.

Nonferrous metals can indicate wear from the aluminum parts of the engine such as main bearings, rod bearings, or turbocharger bearings.

Small amounts of debris may be found in the filter element. This debris could be caused by friction and by normal wear. Consult your Cat dealer to arrange for further analysis if an excessive amount of debris is found.

Using an oil filter element that is not recommended by Caterpillar can result in severe engine damage to engine bearings, to the crankshaft, and to other parts. This can result in larger particles in unfiltered oil. The particles could enter the lubricating system and the particles could cause damage.

i07326813

Pump Coupling Oil - Change

SMCS Code: 5062-044

WARNING

Hot oil and hot components can cause personal injury. Do not allow hot oil or hot components to contact skin.

Note: If the machine is parked on an incline or the engine has been stopped for a short time, the oil in the pump coupling will not return to the housing. Park the machine on level ground and drain the oil after the engine has been stopped for at least 15 minutes.

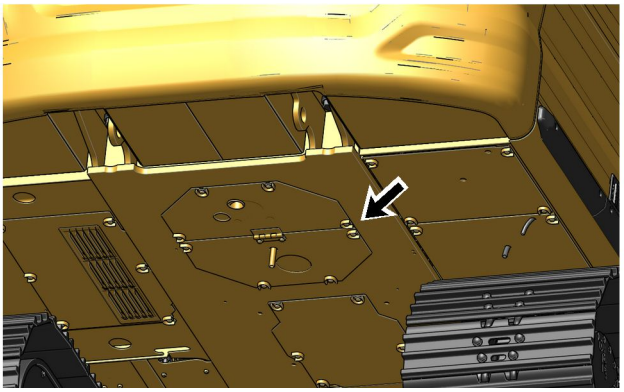

Illustration 765 g06284414

1. Remove the cover plates to gain access to the drain plug.

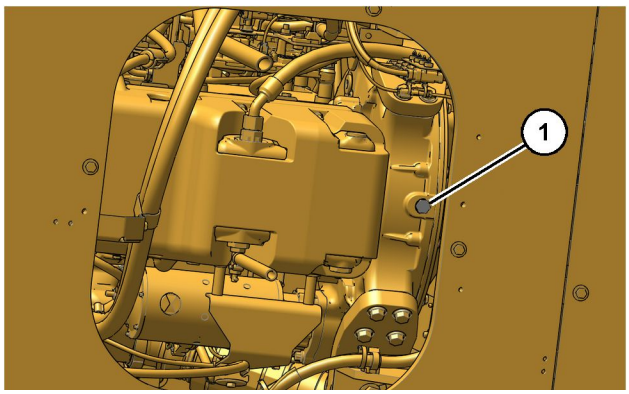

Illustration 766 g06284420

(1) Oil drain plug

Note: Refer to Operation and Maintenance Manual, “General Hazard Information” for information on Containing Fluid Spillage.

2. Remove drain plug (1). Allow the oil to drain into a suitable container.
3. Clean the drain plug and inspect the O-ring seal. If wear or damage is evident, replace the drain plug and/or the O-ring seal.
4. Install drain plug (1).
5. Open the access door on the right side of the machine.

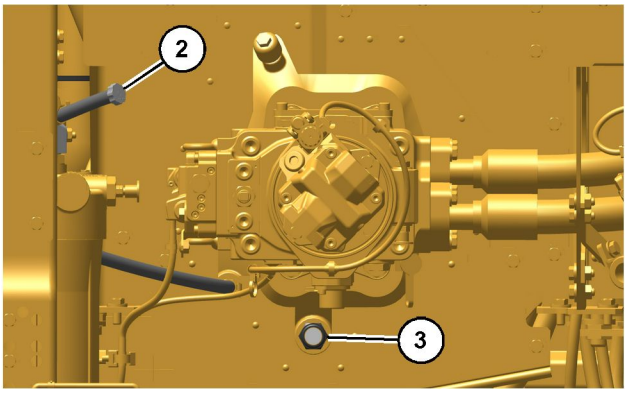

Illustration 767 g06284424

(2) Oil fill cap
(3) Sight gauge

NOTICE
Do not overfill the housing for the pump coupling. Overfilling will the cause the engine oil to overheat and engine damage can result.

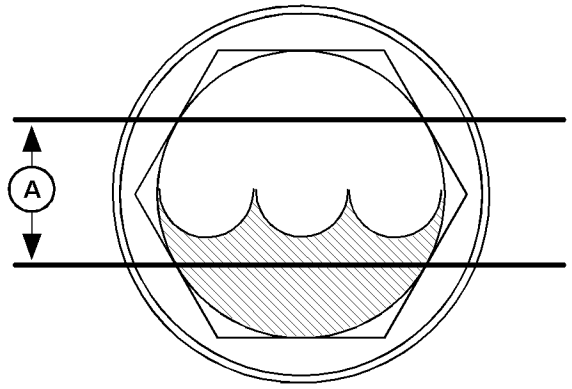

Illustration 768 g03208836
Sight Gauge

6. Remove fill cap (2). Fill the housing with new oil to area (A) of sight gauge (3). See Operation and Maintenance Manual, “Lubricant Viscosities” and Operation and Maintenance Manual, “Capacities (Refill)”.
7. Clean and install the fill cap.
8. Check for leaks.
9. Close the access door on the right side of the machine.
10. Install the cover plate.

i07327147

Pump Coupling Oil Level - Check

SMCS Code: 5062-535

WARNING

Hot oil and hot components can cause personal injury. Do not allow hot oil or hot components to contact skin.

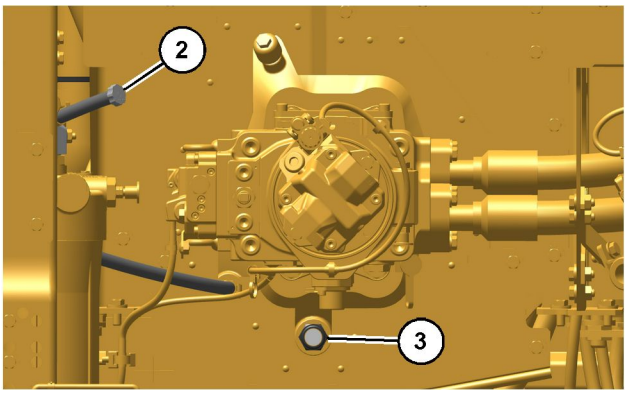

Illustration 769 g06284424
(2) Oil fill cap
(3) Sight gauge

Note: Check the oil level for the pump coupling with the machine on a level surface. If the machine is parked on an incline or the engine has been stopped for a short period, the oil in the pump coupling will not return to the housing. The fluid level cannot be checked properly. Park the machine on level ground and check the oil level once the engine has been stopped for at least 15 minutes.

1. Open the access door on the right side of the machine.

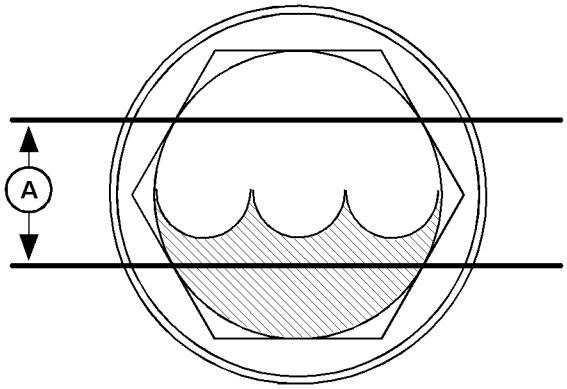

Illustration 770 g03208836
Sight Gauge

2. Maintain the oil level in area (A) of sight gauge (3). If the oil level is low, then add oil. See Operation and Maintenance Manual, “Lubricant Viscosities”.

NOTICE
Do not overfill the housing for the pump coupling. Overfilling will the cause the engine oil to overheat and engine damage can result.

3. Remove oil fill cap (2) and fill to the recommended oil level.

4. Clean and install the oil fill cap (2).

5. Close the right side access door.

i07348844

Radiator, Aftercooler and Oil Cooler Cores - Clean

SMCS Code: 1063-070-KO; 1353-070-KO; 1374-070-KO

WARNING

Personal injury can result from air pressure.

Personal injury can result without following proper procedure. When using pressure air, wear a protective face shield and protective clothing.

Maximum air pressure at the nozzle must be less than 205 kPa (30 psi) for cleaning purposes.

1. Open the access door on the left side of the machine.

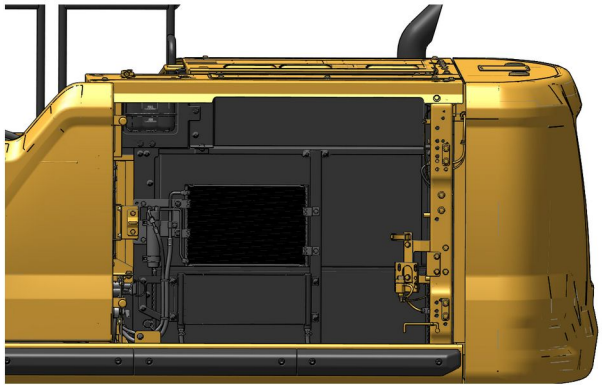

Illustration 771 g06289706

2. Check all the core fins for debris.

3. Remove dust and debris from all the core fins and from the screens.

Compressed air is preferred, but high-pressure water or steam can be used to remove dust and general debris from a core.

See Special Publication, SEBD0518, “Know Your Cooling System” for more detailed information about cleaning core fins.

4. Close the access doors.

i08192239

Receiver Dryer (Refrigerant) - Replace

SMCS Code: 7322-510; 7322-710

WARNING

Personal injury can result from contact with refrigerant.

Contact with refrigerant can cause frost bite. Keep face and hands away to help prevent injury.

Protective goggles must always be worn when refrigerant lines are opened, even if the gauges indicate the system is empty of refrigerant.

Always use precaution when a fitting is removed. Slowly loosen the fitting. If the system is still under pressure, release it slowly in a well ventilated area.

Personal injury or death can result from inhaling refrigerant through a lit cigarette.

Inhaling air conditioner refrigerant gas through a lit cigarette or other smoking method or inhaling fumes released from a flame contacting air conditioner refrigerant gas, can cause bodily harm or death.

Do not smoke when servicing air conditioners or wherever refrigerant gas may be present.

Use a certified recovery and recycling cart to properly remove the refrigerant from the air conditioning system.

NOTICE

If the refrigerant system has been open to the outside air (without being plugged) for more than 30 minutes, the receiver-dryer must be replaced. Moisture will enter an open refrigerant system and cause corrosion which will lead to component failure.

Prepare the machine for maintenance. Refer to Operation and Maintenance Manual, “Prepare the Machine for Maintenance”.

Refer to Service Manual, “Air Conditioning and Heating R-134a for All Caterpillar Machines” for the proper procedure to change the receiver-dryer assembly and for the procedure to reclaim the refrigerant gas.

i07349192

Rollover Protective Structure (ROPS) - Inspect

SMCS Code: 7323-040; 7325-040

Illustration 772 g06184357

Consult your Cat dealer for repair of any cracks in the ROPS.

Inspect the ROPS for loose bolts or for damaged bolts. Replace any damaged bolts or missing bolts with original equipment parts only. Tighten the M24 bolt (1) to 425 ± 50 N·m (315 ± 40 lb ft).

Note: Apply oil to all ROPS bolt threads before you install the bolts. Failure to apply oil to the bolt threads can result in improper bolt torque.

Do not straighten the ROPS. Do not repair the ROPS by welding reinforcement plates to the ROPS.

Consult your Cat dealer for inspection of any potential damage or repair of any damage to any operator protective structure. (Including ROPS, FOPS, TOPS, OPS, and OPG) Refer to Special Instruction, SEHS6929, “Inspection, Maintenance, and Repair of Operator Protective Structures (OPS) and Attachment Installation Guidelines for All Earthmoving Machinery”

i07103309

Seat Belt - Inspect

SMCS Code: 7327-040

Always inspect the condition of the seat belt and the condition of the seat belt mounting hardware before you operate the machine. Replace any parts that are damaged or worn before you operate the machine.

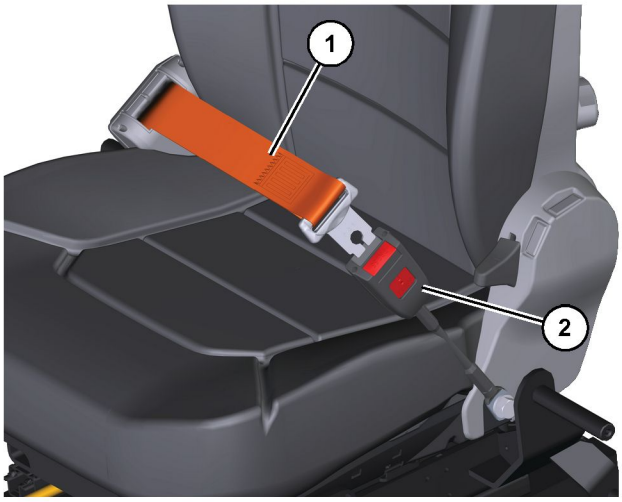

Illustration 773 g06224278

Typical example

Inspect buckle (2) for wear or for damage. If the buckle is worn or damaged, replace the seat belt.

Inspect seat belt (1) for webbing that is worn or frayed. Replace the seat belt if the webbing is worn or frayed.

Inspect all seat belt mounting hardware for wear or for damage. Replace any mounting hardware that is worn or damaged. Make sure that the mounting bolts are tight.

If your machine is equipped with a seat belt extension, also perform this inspection procedure for the seat belt extension.

Contact your Cat dealer for the replacement of the seat belt and the mounting hardware.

Note: The seat belt should be replaced within 3 years of the date of installation. A date of installation label is attached to the seat belt retractor and buckle. If the date of installation label is missing, replace belt within 3 years from the year of manufacture as indicated on belt webbing label, buckle housing, or installation tags (non-retractable belts).

i06970675

Seat Belt - Replace

SMCS Code: 7327-510

The seat belt should be replaced within 3 years of the date of installation. A date of installation label is attached to the seat belt retractor and buckle. If the date of installation label is missing, replace the belt within 3 years from the year of manufacture as indicated on the belt webbing label, buckle housing, or installation tags (non-retractable belts).

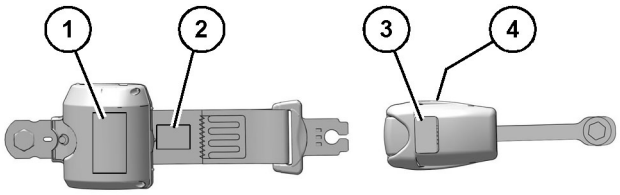

Illustration 774 g06183390

(1) Date of installation (retractor)
(2) Year of manufacture (tag) (fully extended web)
(3) Date of installation (buckle)
(4) Year of manufacture (underside) (buckle)

Consult your Cat dealer for the replacement of the seat belt and the mounting hardware.

Determine the age of a new seat belt before installing on seat. A manufacture label is on the belt webbing and imprinted on the belt buckle. Do not exceed the install by date on the label.

A complete seat belt system should be installed with new mounting hardware.

Date of installation labels should be marked and affixed to the seat belt retractor and buckle.

Note: Date of installation labels should be permanently marked by punch (retractable belt) or stamp (non-retractable belt).

If your machine is equipped with a seat belt extension, also perform this replacement procedure for the seat belt extension.

i07327814

Swing Bearing - Lubricate

SMCS Code: 7063-086

Note: Refer to Special Publication, SEBU6250, “Caterpillar Machine Fluids Recommendations” for more information on grease.

Note: Do not overgrease the swing bearings. Do not grease more than the recommended maintenance interval. Refer to Operation and Maintenance Manual, “Maintenance Interval Schedule” for more information.

Wipe the fittings before you lubricate the swing bearing.

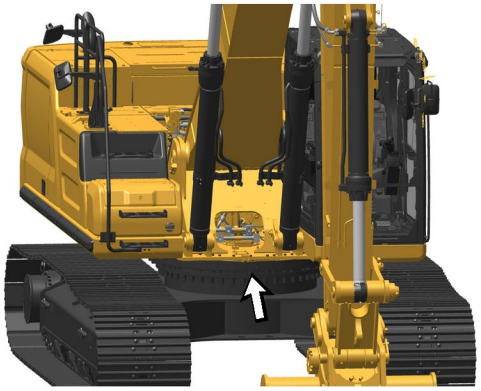

Illustration 775 g06285449

The swing bearing grease zerks are at the front of the swing drive housing near the boom cylinders.

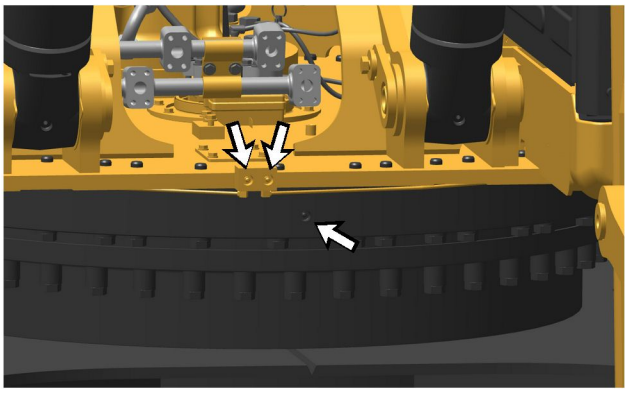

Illustration 776 g06285452

Apply lubricant through the fittings until the lubricant overflows the bearing seals.

i07349047

Swing Drive Oil - Change

SMCS Code: 5459-044

WARNING

Hot oil and hot components can cause personal injury. Do not allow hot oil or hot components to contact skin.

Illustration 777 g06289887

1. Remove the access cover that is located below the swing drives.

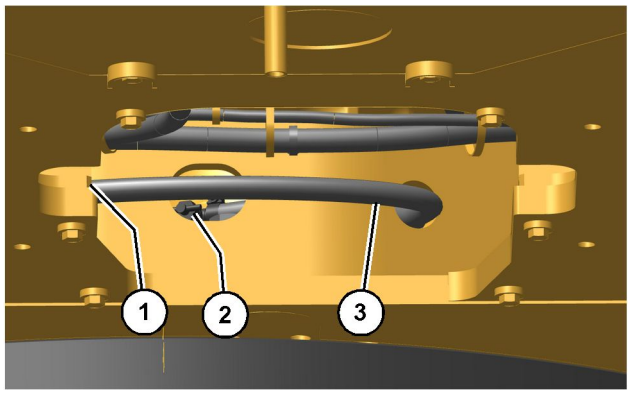

Illustration 778 g06289893

Note: Refer to Operation and Maintenance Manual, “General Hazard Information” for information that pertains to Containing Fluid Spillage.

2. Remove drain hose (3) from holder (1) on the upper frame. Face the end of the hose toward the container.

3. Loosen drain valve (2). Drain the oil into a suitable container.

Note: Drained fluids should be disposed of according to local regulations.

4. Tighten the drain valve. Return the drain hose to holder (1). Make sure that the end of the hose is facing upward.

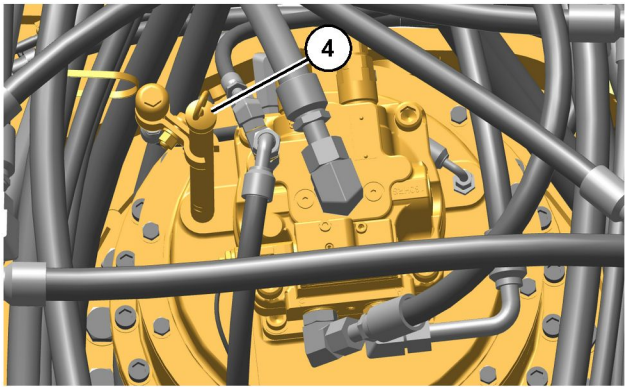

Illustration 779 g06289903

5. Remove dipstick (4).

6. Add the specified quantity of oil through the dipstick tube. See Operation and Maintenance, “Capacities (Refill)”.

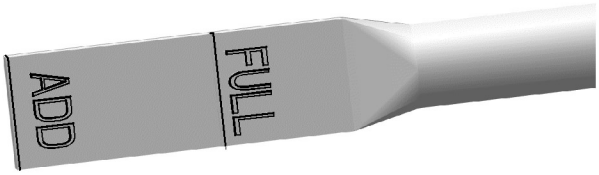

Illustration 780 g06188660

7. Maintain the oil level between the “ADD” and “FULL” marks on the dipstick.

8. Check the oil that has been drained for metal chips or metal particles. Consult your Caterpillar dealer if any metal chips or metal particles are found.

9. Drained materials should be disposed of according to local regulations.

i07349063

Swing Drive Oil Level - Check

SMCS Code: 5459-535-FLV

WARNING

Hot oil and hot components can cause personal injury. Do not allow hot oil or hot components to contact skin.

Illustration 781 g06289912

The dipstick for the swing drive oil is on the swing drive at the rear base of the boom.

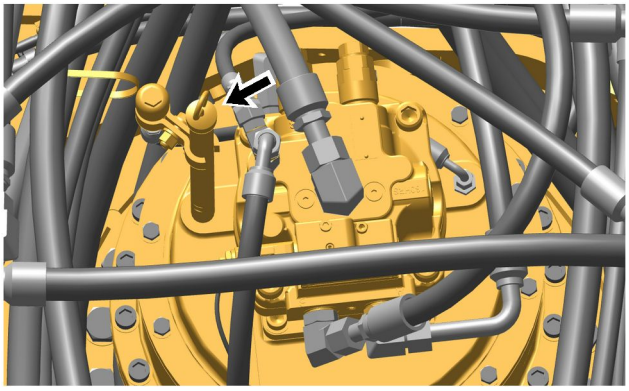

Illustration 782 g06289915

1. Remove the dipstick.

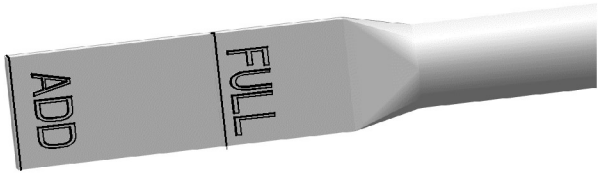

Illustration 783 g06188660

Note: Refer to Operation and Maintenance Manual, “General Hazard Information” for information that pertains to Containing Fluid Spillage.

2. Check the dipstick. Maintain the oil level between the “ADD” and “FULL” marks on the dipstick. Add oil through the dipstick tube, if necessary. Refer to Operation and Maintenance Manual, “Lubricant Viscosities” when you select an oil. If the oil level is above the “FULL” line, then remove oil from the system. Restore the oil to the correct level position.

3. Insert the dipstick.

i07349071

Swing Drive Oil Sample - Obtain

SMCS Code: 5459-554-OC; 5459-008; 5459-008-OC; 5459-OC; 7542-008

WARNING

Hot oil and hot components can cause personal injury. Do not allow hot oil or hot components to contact skin.

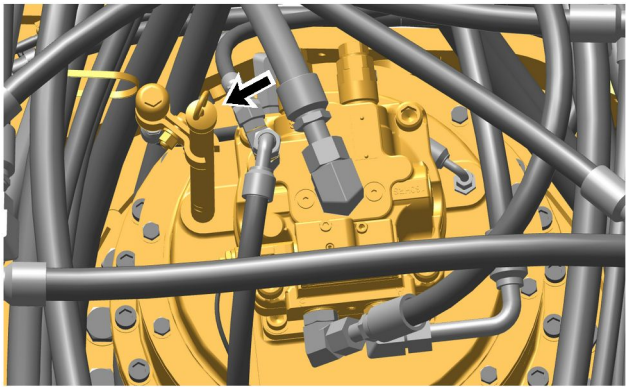

Illustration 784 g06289915

Obtain an oil sample of the swing drive oil through the opening for the dipstick. Refer to Special Publication, SEBU6250, “S·O·S Oil Analysis” for information that pertains to obtaining an oil sample from the swing drive housing. Refer to Special Publication, PEGJ0047, “How To Take A Good Oil Sample” for more information about obtaining an oil sample from the swing drive housing.

i06988169

Swing Gear - Lubricate

SMCS Code: 7063-086

Note: Refer to Special Publication, SEBU6250, “Caterpillar Machine Fluids Recommendations” for more information on grease.

NOTICE
Improper lubrication can cause damage to machine components.

To avoid damage, make sure that the proper amount of grease is applied to the swing drive.

When the amount of grease in the compartment becomes too large, the agitation loss becomes large, thereby accelerating grease deterioration.

Grease deterioration can cause damage to the pinion gear of the swing drive and swing internal gear.

Not enough grease will result in poor gear lubrication.

Remove the inspection cover that is located near the boom base. Inspect the grease.

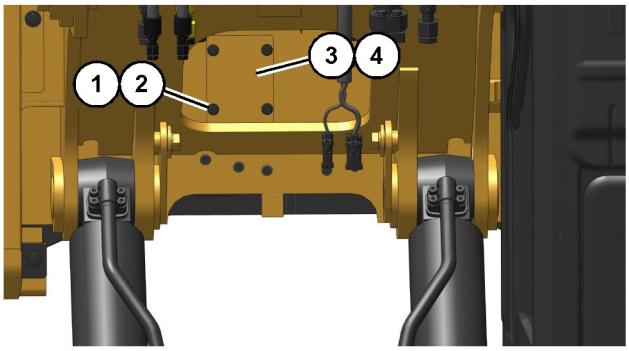

Illustration 785 g06188728

(1) Bolts
(2) Washers
(3) Cover
(4) Gasket

1. Remove bolts (1) and washers (2). Remove cover (3) and gasket (4).
2. Inspect gasket (4). Replace the gasket if damage is evident.

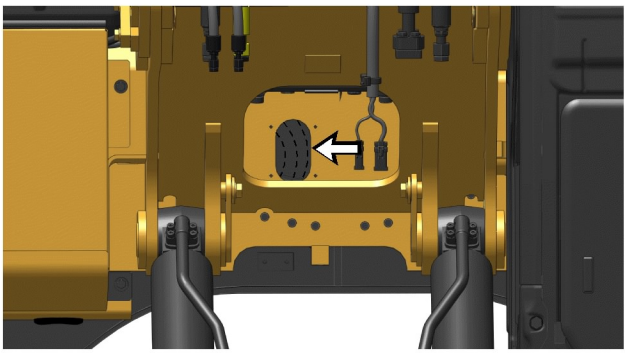

Illustration 786 g06188736

3. Check the level of grease. The level of grease is correct when:
   - Waves of grease are present from the rotating swing drive pinion.
   - The grease is evenly distributed on the floor of the pan.

Note: Smeared or waveless areas are evidence for a lack of grease.

Note: Add grease, as needed. Remove grease, as needed. Too much grease will result in the deterioration of the grease because of excessive movement of the grease. Too little grease will result in poor lubrication of the swing gear.

Refer to Operation and Maintenance Manual, “Capacities (Refill)” for the size of the pan.

4. Check for contamination and for discolored grease.

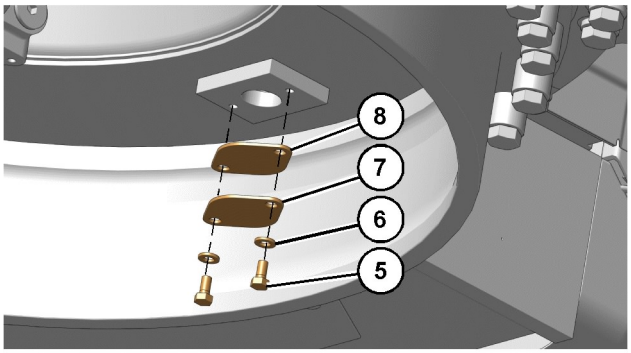

Illustration 787 g06188788

(5) Bolts
(6) Washers
(7) Cover
(8) Gasket

5. If the grease is contaminated or discolored with water, change the grease. Remove the covers from below the swing drive underneath the undercarriage frame.

6. Remove bolts (5), washers (6), cover (7), and gasket (8) to allow the water to drain. When you reinstall cover (7), inspect gasket (8). Replace the gasket if damage is evident.

Illustration 788 g06188791

7. Raise the boom and turn the upper structure by 1/4 turn. Lower the bucket to the ground.

8. Repeat Step 7 at every 1/4 turn in four places. Add grease, as needed.

9. Install gasket (4), cover (3), washers (2), and bolts (1).

i06988628

Track Adjustment - Adjust

SMCS Code: 4170-025

WARNING

Personal injury or death can result from grease under pressure.

Grease coming out of the relief valve under pressure can penetrate the body causing injury or death.

Do not watch the relief valve to see if grease is escaping. Watch the track or track adjustment cylinder to see if the track is being loosened.

Loosen the relief valve one turn only.

If track does not loosen, close the relief valve and contact your Caterpillar dealer.

NOTICE
Keeping the track properly adjusted will increase the service life of the track and drive components.

Note: The track tension must be adjusted according to the current operating conditions. Keep the track as slack as possible if the soil is heavy.

Measuring Track Tension

1. Operate the machine in the direction of the idlers.

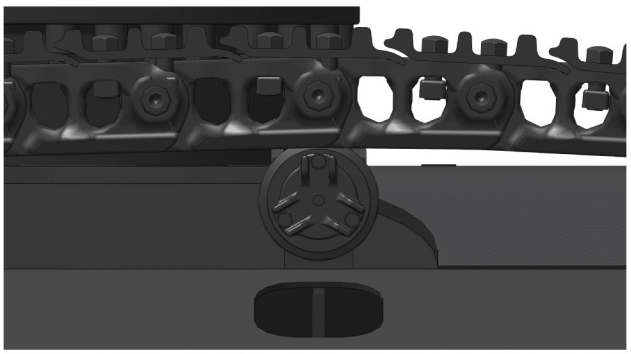

Illustration 789 g06188816

2. Stop with one track pin directly over the front carrier roller. Park the machine and turn off the engine.

Illustration 790 g06208711

3. Place a straight edge on top of the track grousers between the front carrier roller and the idler. The straight edge should be long enough to reach from the front carrier roller to the idler.

Note: If your machine is equipped with three carrier rollers, place a straight edge on the tracks between the carrier rollers. The straight edge should be long enough to reach from one carrier roller to another carrier roller.

4. Measure the maximum amount of sag in the track. The sag is measured from the highest point of the track grouser to the bottom of the straight edge. A track that is properly adjusted will have a sag of 40.0 to 55.0 mm (1.57 to 2.17 inch).

5. If the track is too tight, or if the track is too loose, adjust the track tension according to the appropriate procedure below.

Adjusting Track Tension

Illustration 791 g06188820
Typical example

The track adjuster is located on the track frame.

Tightening the Track

Illustration 792 g06188830
(1) Grease valve

Wipe the fitting before you add grease.

1. Add grease through grease valve (1) until the correct track tension is reached.
2. Operate the machine back and forth in order to equalize the pressure.
3. Check the amount of sag. Adjust the track, as needed.

Loosening the Track

Illustration 793 g06188830

(1) Grease valve

1. Loosen grease valve (1) carefully until the track begins to loosen. One turn should be the maximum.
2. Tighten grease valve (1) to 34 ± 5 N·m (25 ± 4 lb ft) when the desired track tension is reached.
3. Operate the machine back and forth in order to equalize the pressure.
4. Check the amount of sag. Adjust the track, as needed.

i06969791

Track Adjustment - Inspect

SMCS Code: 4170-040

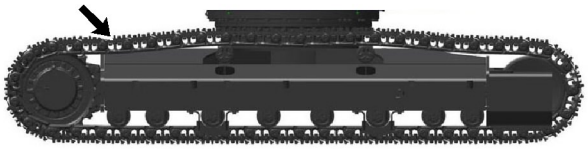

Illustration 794 g06182929

Check the track adjustment. Check the track for wear and for excessive dirt buildup.

If the track appears to be too tight or too loose, refer to Operation and Maintenance Manual, “Track Adjustment - Adjust”.

i06954313

Travel Alarm - Test
(If Equipped)

SMCS Code: 7429-081

Move the machine to test the travel alarm.

1. Start the engine. Move the hydraulic lockout control to the UNLOCKED position.
2. Raise the work tool to avoid any obstacles. Make sure that there is adequate overhead clearance.

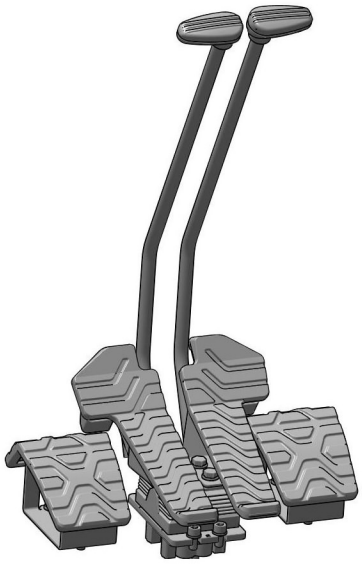

Illustration 795 g06181402

3. Use the travel levers or the travel pedals to move the machine forward. The travel alarm should sound.
4. Release the travel levers and the travel pedals to stop the machine.
5. Use the travel levers and the travel pedals to move the machine backward. The travel alarm should sound.

Illustration 796 g06181631

6. Press the alarm mute button. The travel alarm should shut off.

7. Stop the machine. Lower the work tool to the ground. Move the hydraulic lockout control to the LOCKED position. Stop the engine.

i08233399

Undercarriage - Check

SMCS Code: 4150-535

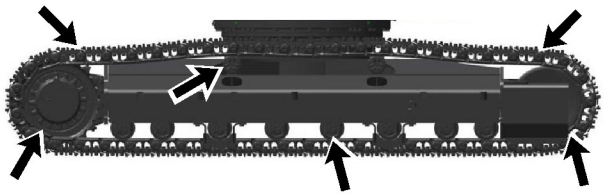

Illustration 797 g06182923

1. Check the carrier rollers, the track rollers, and the idler wheels for possible leakage.

2. Check the surface of the track, the carrier rollers, the track rollers, the idler wheels, the track shoes, and the drive sprockets. Look for signs of wear and loose mounting bolts.

3. Listen for any abnormal noises while you are moving slowly in an open area.

4. If required, clean the undercarriage to keep excess material from building up and solidifying.

5. If abnormal wear exists or abnormal noises or leaks are found, consult your Cat ® dealer.

i03898951

Window - Check

SMCS Code: 7310-535

Check the polycarbonate windows of the cab for the following conditions.

- yellow or haze
- scratches on either side of the window that can be felt with a fingernail
- small cracks that come from the edges or mounting holes
- contact with fluids that result in haze or clouds on the window such as brake fluid

When any of the above conditions exist, contact your Caterpillar dealer for replacement.

i06954326

Window Washer Reservoir - Fill

SMCS Code: 7306-544-KE

NOTICE
When operating in freezing temperatures, use Caterpillar or any commercially available nonfreezing window washer solvent.

Illustration 798 g06181546

1. Open the access door on the left side of the machine.

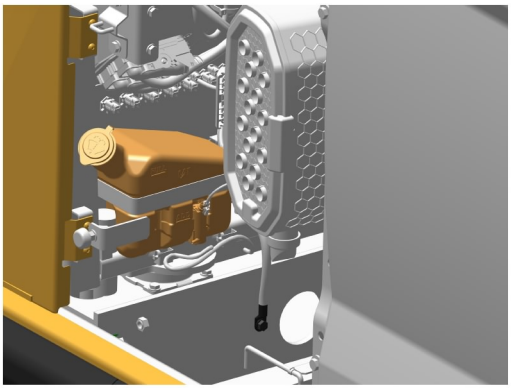

Illustration 799 g06181644

2. Remove the filler cap.
3. Fill the window washer reservoir with washer fluid through the filler opening.
4. Install the filler cap.
5. Close the access door.

i01258249

Window Wiper - Inspect/ Replace

SMCS Code: 7305-040; 7305-510

Inspect the condition of the wiper blades. Replace the wiper blades if the wiper blades are worn or damaged or if streaking occurs.

i07103291

Windows - Clean

SMCS Code: 7310-070; 7340-070

Clean the outside of the windows from the ground, unless handholds are available.

Illustration 800 g06224268
Typical example

Cleaning Methods

Aircraft Window Cleaner

Apply the cleaner with a soft cloth. Rub the window with moderate pressure until all the dirt is removed. Allow the cleaner to dry. Wipe off the cleaner with a clean soft cloth.

Soap and Water

Use a clean sponge or a soft cloth. Wash the windows with a mild soap or with a mild detergent. Also use plenty of lukewarm water. Rinse the windows thoroughly. Dry the windows with a moist chamois or with a moist cellulose sponge.

Stubborn Dirt and Grease

Wash the windows with a good grade of naphtha, of isopropyl alcohol, or of Butyl Cellosolve. Then, wash the windows with soap and with water.

Polycarbonate Windows (If equipped)

Special care is needed to clean polycarbonate windows.

Wash polycarbonate windows with mild soap and warm water that does not exceed 50° C (122° F). Use a soft sponge, or damp cloth. Never use a dry cloth or paper towels on polycarbonate windows. Rinse the windows with a sufficient amount of clean cold water.

Note: Naphtha or kerosene can be used to remove labels, films, paint, or marking pen from polycarbonate windows.

Note: Do not use abrasive, or highly alkaline cleaners. Do not use sharp instruments, such as squeegees or razor blades on polycarbonate windows. Do not clean polycarbonate windows in the hot sun or at elevated temperatures.

Warranty Section

Warranty Information

i06044323

Emissions Warranty Information

SMCS Code: 1000

The certifying engine manufacturer warrants to the ultimate purchaser and each subsequent purchaser that:

1. New non-road diesel engines and stationary diesel engines less than 10 liters per cylinder (including Tier 1 and Tier 2 marine engines < 37 kW, but excluding locomotive and other marine engines) operated and serviced in the United States and Canada, including all parts of their emission control systems (“emission related components”), are:

a. Designed, built, and equipped so as to conform, at the time of sale, with applicable emission standards prescribed by the United States Environmental Protection Agency (EPA) by way of regulation.

b. Free from defects in materials and workmanship in emission-related components that can cause the engine to fail to conform to applicable emission standards for the warranty period.

2. New non-road diesel engines (including Tier 1 and Tier 2 marine propulsion engines < 37 kW and Tier 1 through Tier 4 marine auxiliary engines < 37 kW, but excluding locomotive and other marine engines) operated and serviced in the state of California, including all parts of their emission control systems (“emission related components”), are:

a. Designed, built, and equipped so as to conform, at the time of sale, to all applicable regulations adopted by the California Air Resources Board (ARB).

b. Free from defects in materials and workmanship which cause the failure of an emission-related component to be identical in all material respects to the component as described in the engine manufacturer's application for certification for the warranty period.

3. New non-road diesel engines installed in construction machines conforming to the South Korean regulations for construction machines manufactured after January 1, 2015, and operated and serviced in South Korea, including all parts of their emission control systems (“emission related components”), are:

a. Designed, built, and equipped so as to conform, at the time of sale, with applicable emission standards prescribed in the Enforcement Rule of the Clean Air Conservation Act promulgated by South Korea MOE.

b. Free from defects in materials and workmanship in emission-related components that can cause the engine to fail to conform to applicable emission standards for the warranty period.

The aftertreatment system can be expected to function properly for the lifetime of the engine (emissions durability period) subject to prescribed maintenance requirements being followed.

A detailed explanation of the Emission Control Warranty that is applicable to new non-road and stationary diesel engines, including the components covered and the warranty period, is found in a supplemental Special Publication. Consult your authorized Cat dealer to determine if your engine is subject to an Emission Control Warranty and to obtain a copy of the applicable Special Publication.

Reference Information Section

Reference Materials

i07422648

Reference Material

SMCS Code: 1000; 7000

Additional literature regarding your product may be purchased from your local Cat dealer or by visiting publications.cat.com. Use the product name, sales model, and serial number to obtain the correct information for your product.

publications.cat.com

i07743978

Decommissioning and Disposal

SMCS Code: 1000; 7000

When the product is removed from service, local regulations for the product decommissioning will vary. Disposal of the product will vary with local regulations.

Improperly disposing of waste can threaten the environment. Obey all local regulations for the decommissioning and disposal of materials.

Utilize appropriate personal protective equipment when decommissioning and disposing product.

Consult the nearest Cat dealer for additional information. Including information for component remanufacturing and recycling options.

Index

A

Access Door and Cover Locations 362
Engine Hood 362
Engine Service Door 363
Left Front Access Door 363
Left Rear Access Door 363
Right Side Access Door 363
Storage Box 364
Additional Messages 19
Air Conditioner (10) 24
Alternate Exit (7) 23
Data Privacy (3) 22
DEF (12) 25
DEF Purge Indicator Lamp (9) 24
Diesel Fuel Requirements (13) 25
Engine Oil Requirements (11) 25
Front Window Usage (1) 21
Hammer Operation (2) 22
Hose Burst (5) 23
Hose Burst (6) 23
Hydraulic Oil Level Check (14) 26
Joystick Controls Alternate Patterns (4) 22
No Step (8) 24
Air Conditioner/Cab Heater Filter (Recirculation) - Inspect/Replace 385
Air Conditioning and Heating Control 278
Operation 280
Selection Method 280
Alternate Exit 214
Rear Window with Lever (If Equipped) 214
Rear Window with Ring Seal (If Equipped) 214
Assist and E-Fence 40
Lifting operations with the machine 40
Operation Guidance 40

B

Battery - Clean 385
Battery Disconnect Switch 243
Battery Electrolyte Level - Check 385
Battery Hold-Down - Tighten 386
Battery or Battery Cable - Inspect/Replace 386
Before Operation 39, 211
Before Starting Engine 35
Belt - Inspect/Adjust/Replace 386
Boom and Stick Linkage - Lubricate 387
Boom, Stick and Bucket Operation 318
Digging 318
Lifting Objects 320
Machines that are Equipped with a Long Reach Configuration 321
Boom/Stick/Bucket Combinations 61
Bucket - Remove and Install 323
Installation Procedure 324
Removal Procedure 323
Bucket Linkage - Inspect/Adjust 388
Bucket Linkage - Lubricate (DB Bucket Family) 390
Bucket Linkage - Lubricate (TB Bucket Family) 389
Bucket Tips - Inspect/Replace 390
Bucket Tips (Cat® Advansys) - If Equipped 394
J Series GET Bucket Tips 392
K Series GET Drive-through System Bucket Tips 390
Side Cutters 395
Side Protectors (If Equipped) 395
Burn Prevention 29
Batteries 30
Coolant 29
Oils 30

C

Cab Air Filter (Fresh Air) - Clean/Replace 396
Cab Door 287
Camera 283
360 Visibility (If Equipped) 284
Rear View Camera 283
Right Side View Camera (If Equipped) 284
Camera - Clean 397
Capacities (Refill) 373
Condenser (Refrigerant) - Clean 397
Cooling System Coolant (ELC) - Change 398
Cooling System Coolant Extender (ELC) - Add 400
Cooling System Coolant Level - Check 401
Cooling System Coolant Sample - Obtain 402
Counterweight Removal and Installation 349
Counterweight Installation 351
Counterweight Removal 349
Crushing Prevention and Cutting Prevention 29

D

Daily Inspection 211
Daily Basis 212
First 50 Hours 211
Declaration of Conformity..... 210
Decommissioning and Disposal 459
DEF Filler Screen - Clean (Emission Related Component) 404
DEF Manifold Filters - Replace (Emission Related Component) 405
Demolition 44
Diesel Exhaust Fluid - Drain (Emission Related Component) 406
Diesel Exhaust Fluid - Fill (Emission Related Component) 407
Diesel Exhaust Fluid Filter - Replace (Emission Related Component) 408
Diesel Exhaust Fluid Injector - Replace (Emission Related Component) 409
Diesel Particulate Filter - Clean (Emission Related Component) 411
Diesel Particulate Filter Regeneration 222
Modes of Regeneration 222
Regeneration 222
Regeneration Indicators 222
Regeneration Switch 222
Regeneration System Warning Indicators 223
Regeneration Triggers 223

E

Electrical Storm Injury Prevention 35
Emissions Certification Film 208–209
Emissions Warranty Information 458
Engine Air Filter Primary and/or Secondary Element - Replace 411
Engine Air Pre-Cleaner - Clean 413
Primary Air Filter Element - Replace 411
Secondary Air Filter Element - Replace 412
Engine and Machine Warm-Up 303
Hydraulic System..... 304
Improve Cold-Weather Performance 304
Engine Oil and Filter - Change 416
Fast Fill 419
Procedure for Changing Engine Oil and Filter 417
Engine Oil Level - Check..... 415
Engine Oil Sample - Obtain..... 416
Engine Starting..... 39, 302
Engine Starting (Alternate Methods)..... 359
Engine Starting with Auxiliary Start Receptacle (If Equipped) 361
Engine Starting with Jump Start Cables (If Equipped) 359
Engine Stopping 44
Engine Valve Lash - Check 420
Equipment Lowering with Engine Stopped 46, 308
Machines Equipped with Boom Lowering Control Valves..... 308
Machines without a Boom Lowering Control Valve 308
Pressure Release of Auxiliary Lines..... 310
Ether Starting Aid Cylinder - Replace (If Equipped) 421

F

Film (Product Identification) - Clean..... 422
Cleaning of the Films 422
Final Drive Oil - Change 422
Final Drive Oil Level - Check..... 423
Final Drive Oil Sample - Obtain..... 424
Final Drive Sun Gear Removal 357
Fire Extinguisher Location..... 34
Fire Prevention and Explosion Prevention..... 30
Battery and Battery Cables..... 32
Ether 33
Fire Extinguisher..... 33
General 30
Lines, Tubes, and Hoses 33
Regeneration 30
Wiring..... 32
Fire Safety 34
Foreword 5
California Proposition 65 Warning 5
Certified Engine Maintenance 6
Literature Information 5
Machine Capacity 6
Maintenance 5
Operation 5
Product Identification Number 6
Safety..... 5
Freezing Conditions 344
Frozen Ground Conditions 307
Fuel Cap Filter - Replace 424
Fuel System - Prime..... 424
Fuel System Primary Filter (Water Separator) Element - Replace..... 425
Fuel System Secondary Filter - Replace 426
Fuel System Water Separator - Drain 427
Fuel Tank Shutoff and Drain Control 301

Fuel Tank Strainer - Clean 428
Fuel Tank Water and Sediment - Drain 428
Fuel Transfer Pump (Refueling) (If Equipped) 274
Fuses - Replace 429
Power Fuse Module 432
Relays 431

G

General Hazard Information 26
Containing Fluid Spillage 28
Dispose of Waste Properly 29
Fluid Penetration 27
Inhalation 28
Pressurized Air and Water 27
Trapped Pressure 27
General Information 51
Guards 49
Guards (Operator Protection)
Other Guards (If Equipped) 50
Rollover Protective Structure (ROPS), Falling Object Protective Structure (FOPS) or Tip Over Protection Structure (TOPS) 49

H

High Pressure Fuel Lines 35
Hydraulic System Oil - Change 432
Cat HYDO Advanced 10 Oil Change Interval 432
Fast Fill 437
Hydraulic Hammer Use 432
Procedure to Change the Hydraulic Oil 432
Hydraulic System Oil Filter (Return) - Replace 437
Hydraulic Hammer Use 438
Return Filter Replacement Procedure 438
Hydraulic System Oil Level - Check 439
Hydraulic System Oil Sample - Obtain 441

I

Identification Information 205
Important Safety Information 2
Indicators and Gauges - Test 441

J

Joystick Controls 290
Dual Slider Joystick Controls (If Equipped) 292
Medium Pressure (If Equipped) 293
Vertical Slider Joystick Controls 291
Joystick Controls Alternate Patterns 298
Changing Machine Control Pattern(If Equipped) 298

L

Leaving the Machine 346
Lifting and Tying Down the Machine 351
Lifting the machine 352
Lifting the Machine Segments 354
Tying Down the Machine 353
Lifting Capacities 69, 148
336 LC with 7560 kg (16667 lb) Counterweight 70
336 LN with 7560 kg (16667 lb) Counterweight 112
336 with 6800 kg (14991 lb) Counterweight 149
7560 kg (16667 lb) Counterweight 169
Configuration Identification 69, 148
Symbols Found in the Lifting Capacity Charts 70, 149
Lifting Objects 44
Light Emitting Diode Lamp (LED) - Replace 441
Lubricant Viscosities (Fluids Recommendations) 365
Biodiesel 371
Coolant Information 372
Diesel Exhaust Fluid 369
Diesel Fuel Recommendations 368
Engine Oil 365
Fuel Additives 371
General Information for Lubricants 365
Hydraulic Systems 366
Other Fluid Applications 367
Selecting the Viscosity 365
Special Lubricants 368
Lubricant Viscosities and Refill Capacities ... 365

M

Machine Operation 214
Machine Security System 245
Activating Bluetooth Functionality 246
Armed 248
Components 246
Disarmed 248
Engine Start Switch Troubleshooting 260
General Information 245

Grace Period 248
Navigating the User Interface Touchscreen Display 249
Operation of Status Indicator 249
Operator Login 250
Pairing Your Device to the Machine 247
Reading the ID of a Key 248
System Overview 246
Machine Storage and Specified Storage Period 346
Machine Storage 346
Specified Storage Period 346
Maintenance Access 362
Maintenance Interval Schedule 383
Every 10 000 Service Hours 384
Every 10 Service Hours or Daily 383
Every 10 Service Hours or Daily for First 50 Hours 384
Every 100 Service Hours 384
Every 1000 Service Hours 384
Every 12 000 Service Hours or 6 Years 384
Every 2000 Service Hours 384
Every 250 Service Hours 384
Every 2500 Service Hours 384
Every 3 Years 384
Every 3000 Service Hours 384
Every 50 Service Hours 384
Every 500 Service Hours 384
Every 5000 Service Hours 384
Every 6000 Service Hours or 3 Years 384
Initial 500 Service Hours 384
When Required 383
Maintenance Section 362
Maintenance Support 375
Mirror 281
Mirror Adjustment 281
Monitoring System 261
Application Menu 265
Electronic OMM 273
Function List Screen 273
General Information 261
Logging In 264
Machine Warnings 264
Navigation 265
Mounting and Dismounting 211
Alternate Exit 211
Machine Access System Specifications 211

O

Oil Filter - Inspect 443
Inspect a Used Filter for Debris 443
Oil Filter (Hydraulic Hammer) - Replace (If Equipped) 442
Operating Technique Information 311
Coaching Tips 311
Grade and Assist Operating Tips 315
Operating Precaution 314
Restricted Operation 313
Smart Boom 317
Operating Techniques 311
Operation 41, 306
Critical Failures 41
Limiting Conditions and Criteria 41
Machine Operating Temperature Range 41
Machine Operation 43
Machine Operation when the Machine is not Completely Assembled 44
Operation Information 306
Lifting Objects 307
Operation Section 211
Operator Controls 232
12V Power Receptacle (24) & (25) 242
Cat Grade Monitor (6) (if equipped) 236
Dome Light (27) 243
Engine Idle Shutdown 238
Engine Start Switch (Machines equipped with Delayed Engine Shutdown 8) 236
Engine Start Switch (Machines not equipped with Delayed Engine Shutdown 8) 237
Hydraulic Lockout Control (1) 233
Joystick Controls (3) 234
Left Side Switch Panel (2) 233
Monitor (5) 236
Operator's Seat (9) 238
Right Side Switch Panel (7) 239
Service Port (26) 242
Tilt-Up Console (9A) 238
Travel Control (4) 234
USB/Aux Ports (23) 242
Operator Station 49

P

Parking 45, 344
Plate Locations and Film Locations 205
Electromagnetic Emissions 207
Engine Serial Number 208
Product Identification Number (PIN) Plate 205
Sound Certification Film 208
Prepare the Machine for Maintenance 375
Product Information Section 51
Product Link 244

Data Broadcasts 244
Operation in a Blast Site for Product Link Radios 245
Pump Coupling Oil - Change..... 444
Pump Coupling Oil Level - Check 445

Q

Quick Coupler Operation (Circuit for CW Coupler (If Equipped)) 325
Coupling the Work Tool..... 326
Electric Switch Operation 326
General Operation 325
Uncoupling the Work Tool..... 328
Quick Coupler Operation (Hydraulic Pin Grabber Quick Coupler (If Equipped)) 329
General Operation 329
Quick Coupler Operation 330

R

Radiator, Aftercooler and Oil Cooler Cores - Clean 446
Radio 275
Radio Function List 276
Radio Operation..... 277
Selection Method 277
USB/AUX Operation 277
Receiver Dryer (Refrigerant) - Replace 446
Reference Information Section 459
Reference Material 459
Reference Materials 459
Regulatory Information (Japan) 51
Industrial Safety and Health Act 55
Operation of Construction Equipment and the Governing Laws and Regulations..... 52
Qualifications for Machine Operation 51
Standard Certificate of Transfer 54
Trailer Transportation 51
Restricted Visibility 36
Rollover Protective Structure (ROPS) - Inspect 447
Roof Hatch..... 287

S

S·O·S Information 374
Safety Messages..... 7
Aerosol Starting Aid (11)..... 16
Crushing Hazard (14) 17
Crushing Hazard (16) 18
Crushing Hazard (4) 12
Crushing Hazard (7C)..... 14
Crushing Hazard (7D)..... 14
Crushing Injury (3) 11
Do Not Lift Over Personnel (8) 15
Do Not Operate (7A)..... 13
Do Not Weld or Drill on ROPS (9) 16
Electrical Power Lines (7F)..... 15
Falling Object Guard Structure (18) 19
High-Pressure Gas (13)..... 17
Hot Surface (10) 16
Joystick Controls Alternate Patterns (7E) ... 15
Jump-Start Cables (12) 17
Lifting Level Warning (1).....11
Lifting Notice (5)..... 12
Overload Warning Device (2) 11
Product Link (6) 12
Relieve Hydraulic Tank Pressure (17)..... 19
Seat Belt (7B) 13
Vapor Explosion (15) 18
Safety Section 7
Seat 215
Comfort Level Seat (If Equipped) 215
Deluxe Level Seat (If Equipped)..... 216
Premium Level Seat (If Equipped) 218
Seat Belt 220
Extension of the Seat Belt 221
Seat Belt Adjustment for Retractable Seat Belts 221
Seat Belt - Inspect 447
Seat Belt - Replace 448
Securing the Machine..... 348
Selective Catalytic Reduction Warning System..... 224, 227
Definitions 224, 227
Inducement Emergency Override for Cat Engines Equipped with Selective Catalytic Reduction Systems (If Equipped)..... 230
Inducement Strategy for DEF Level .. 225, 228
Inducement Strategy for DEF Quality, Tampering, SCR System Fault, and Impeded EGR 226, 229
Service Interval Chart..... 375
Severe Service Application 381
Improper Maintenance Procedures (Maintenance Procedures Which May Contribute to a Severe Service Application) 382
Severe Environmental Factors 381
Severe Operating Conditions 381
Shipping the Machine..... 347

Shipping a Machine that is not Completely Assembled 348
Slope Operation 45
SmartBoom Control (If Equipped)..... 293
SmartBoom Operation (If Equipped)..... 321
Advantages..... 322
Excavation and Loading 322
Hammering 322
Sound Information and Vibration Information..... 46
Sound Level Information..... 46
Sound Level Information for Machines in Eurasian Economic Union Countries..... 47
Sound Level Information for Machines in European Union Countries and in Countries that Adopt the “EU Directives” 47
Sources..... 49
“The European Union Physical Agents (Vibration) Directive 2002/44/EC”..... 47
Specifications 56
Application/Configuration Restrictions 56
Expected Life 56
Intended Use 56
Specification Data..... 57
Working Ranges 59
Stopping the Engine 345
Engine Shutdown Switch..... 345
Stop the Engine if an Electrical Malfunction Occurs..... 345
Stopping the Machine..... 344
Sun Screen..... 286
Swing Bearing - Lubricate 448
Swing Drive Oil - Change 448
Swing Drive Oil Level - Check..... 450
Swing Drive Oil Sample - Obtain..... 450
Swing Gear - Lubricate..... 451
System Pressure Release..... 377
Coolant System 377
Hydraulic System..... 377

T

Table of Contents 3
Towing Information 356
Towing the Machine..... 356
Lightweight Towing 357
Retrieval and Towing of Machine 357
Track Adjustment - Adjust 452
Adjusting Track Tension 453
Measuring Track Tension 452
Track Adjustment - Inspect..... 454
Track Information 34
Transportation Information 347
Travel Alarm - Test (If Equipped)..... 454
Travel Control (Straight Travel Pedal (If Equipped)) 288
Travel in Water and Mud 317
Procedure for Removing the Machine from Water or Mud 317

U

Undercarriage - Check 455

V

Visibility Information 36

W

Warranty Information..... 458
Warranty Section..... 458
Welding on Machines and Engines with Electronic Controls 381
Window - Check 455
Window (Front)..... 285
Window Washer Reservoir - Fill..... 456
Window Wiper - Inspect/Replace..... 456
Windows - Clean 456
Cleaning Methods..... 456
Polycarbonate Windows (If equipped) 457
Work Tool Control (One-Way Flow) (If Equipped) 295
Joystick 295
Work Tool Pedal..... 296
Work Tool Control (Two-Way Flow) (If Equipped) 297
Joystick 297
Work Tool Pedal..... 297
Work Tool Flow Control 300
Work Tool Operation (If Equipped)..... 337
Crusher Operation (If Equipped) 340
Hammer Operation (If Equipped) 337
Shear Operation (If Equipped) 339
Work Tools..... 39

Product and Dealer Information

Note: For product identification plate locations, see the section “Product Identification Information” in the Operation and Maintenance Manual.

Delivery Date: _____

Product Information

Model: _____

Product Identification Number: _____

Engine Serial Number: _____

Transmission Serial Number: _____

Generator Serial Number: _____

Attachment Serial Numbers: _____

Attachment Information: _____

Customer Equipment Number: _____

Dealer Equipment Number: _____

Dealer Information

Name: _____ Branch: _____

Address: _____

_____

_____

	Dealer Contact	Phone Number	Hours
Sales:			
Parts:			
Service:			

M0082496
©2020 Caterpillar
All Rights Reserved

CAT, CATERPILLAR, LET'S DO THE WORK, their respective logos, "Caterpillar Yellow", the "Power Edge" and Cat "Modern Hex" trade dress as well as corporate and product identity used herein, are trademarks of Caterpillar and may not be used without permission.

468 November 2020